Bellows suction cups (round)

SFB1 20 HT1-60 G1/8-IG

Part no..:10.01.06.04408

https://www.schmalz.com/10.01.06.04408

Home > Vacuum Technology for Automation > Vacuum Components > Vacuum Suction Cups > Suction Cups for Plastic Films and Paper > Suction Cups SFF / SFB1 > SFB1 20 HT1-60 G1/8-IG

Bellows suction cup (round) for very uneven workpieces flexible workpieces



- Size: 20
- Suction cup material: High temperature material HT1
- Material hardness [Shore A]: 60 Shore A
- Number of folds: 1.5

Design Data

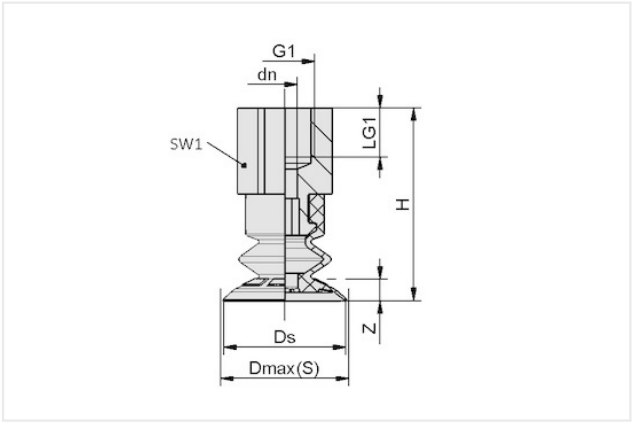

Attribute	Value
G1	G1/8"-F
Dmax(S)	21 mm
Ds	20 mm
d2	6.60 mm
dn	4.10 mm
LG1	8 mm
H	31.50 mm
SW1	14 mm
Z (Stroke)	5 mm

Technical Data

Attribute	Value
Size	20
Suction cup material	High temperature material HT1
Suction force (-600mbar)	2.10 N
Product family	SFB1
Volume	1.20 cm^3
Number of folds	1.50
Material hardness [Shore A]	60 Shore A

Bellows suction cups (round)

SFB1 20 HT1-60 G1/8-IG

Part no..:10.01.06.04408

https://www.schmalz.com/10.01.06.04408

Spare parts



SFB1 20 HT1-60 SC040

Part no..:10.01.06.04381

Size: 20
Suction cup material: High temperature material HT1
Material hardness [Shore A]: 60 Shore A
Number of folds: 1.5



SC 040 G1/8-IG

Part no..:10.01.06.02482

Connection geometry: 040
Connection: G1/8"-F
Length L1: 20.7 mm
Fitting length: 14 mm
Nominal diameter dn: 4.1 mm