Flat suction cup (round)

SUF 8 HT1-60 M5-IG

Part no..:10.01.01.14235

https://www.schmalz.com/10.01.01.14235

Home > Vacuum Technology for Automation > Vacuum Components > Vacuum Suction Cups > Flat Suction Cups (Round) > Flat Suction Cups SUF > SUF 8 HT1-60 M5-IG

Flat suction cup (round) for process safe handling of smooth or slightly rough surfaces



- Size: 8
- Suction cup material: High temperature material HT1
- Material hardness [Shore A]: 60 Shore A
- Vacuum connection: M5-F

Design Data

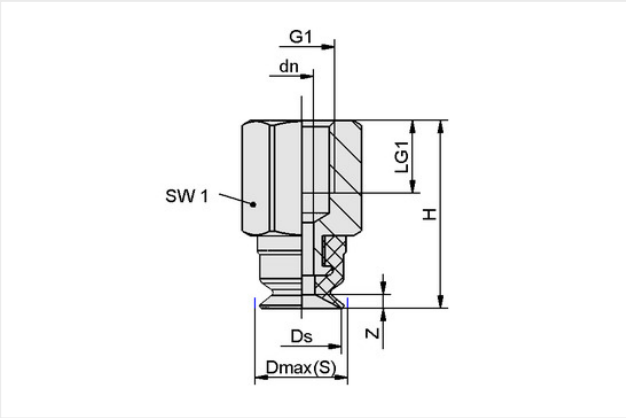

Attribute	Value
Dmax(S)	8.40 mm
Ds	8 mm
dn	1.80 mm
G1	M5-F
H	14.20 mm
LG1	5.50 mm
SW1	8 mm
Z (Stroke)	0.80 mm

Technical Data

Attribute	Value
Suction force (-600mbar)	2.40 N
Pull-off force	2.40 N
Volume	0.04 cm³
Curve radius (min) (convex)	8 mm
Hose diameter (rec.) d	2 mm
Size	8
Suction cup material	High temperature material HT1
Material hardness [Shore A]	60 Shore A

Contact Schmalz
Schmalz Inc. | 5850 Oak Forest Drive, Raleigh, NC 27616, United States | +1 (919) 713-0880 |
schmalz.us@schmalz.com

Flat suction cup (round)

SUF 8 HT1-60 M5-IG

Part no..:10.01.01.14235

https://www.schmalz.com/10.01.01.14235

Weight	1.20 g
Product family	SUF
Number of folds	0

Note: Suction force: The specified suction forces are theoretical values at a vacuum of -0.6 bar and with a dry, smooth and flat workpiece surface - they do not include a safety factor Hose diameter: The recommended hose diameter refers to a hose length of approx. 2 m

Spare parts



SC 020 M5-IG

Part no..:10.01.06.04306

Connection geometry: 020
Vacuum connection: M5-F
Fitting length: 8.7 mm
Nominal diameter dn: 1.8 mm

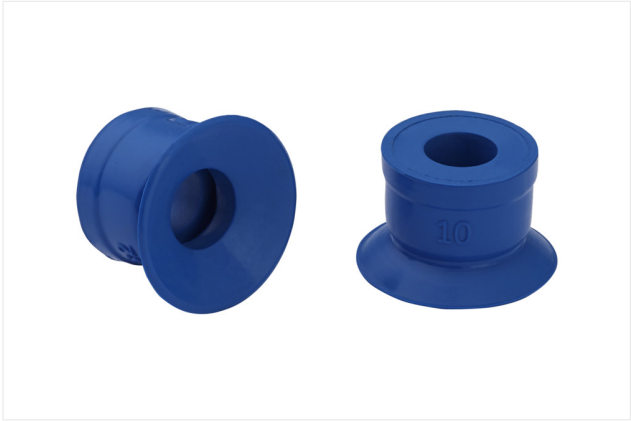

SUF 8 HT1-60 SC020

Part no..:10.01.01.13986

Size: 8
Suction cup material: High temperature material HT1
Material hardness [Shore A]: 60 Shore A