Bellows suction cups (round)

SPB1 10 ED-65 M5-AG

Part no..:10.01.06.03489

https://www.schmalz.com/10.01.06.03489

Home > Vacuum Technology for Automation > Vacuum Components > Vacuum Suction Cups > Suction Cups for the Packaging Industry > Bellows Suction Cups SPB1 (1.5 Folds) > SPB1 10 ED-65 M5-AG

Bellows suction cup (round) for very uneven workpieces



- Size: 10
- Suction cup material: Elastodur ED
- Material hardness [Shore A]: 65 Shore A
- Thread G1: M5-M
- Number of folds: 1.5

Design Data

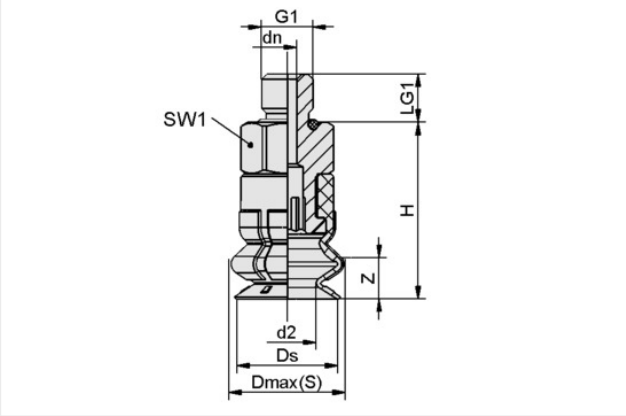

Attribute	Value
d2	5.60 mm
dn	1.80 mm
Dmax(S)	11.30 mm
Ds	9.80 mm
G1	M5-M
H	17.10 mm
LG1	4.70 mm
SW1	8 mm
Z (Stroke)	4 mm

Technical Data

Attribute	Value
Suction force (-600mbar)	1.50 N
Pull-off force	4 N
Lateral force	2 N
Volume	0.45 cm^3
Curve radius (min) (convex)	5 mm
Hose diameter (rec.) d	4 mm
Size	10
Number of folds	1.50

Bellows suction cups (round)

SPB1 10 ED-65 M5-AG

Part no..:10.01.06.03489

https://www.schmalz.com/10.01.06.03489

Suction cup material	Elastodur ED
Material hardness [Shore A]	65 Shore A
Weight	1.60 g
Product family	SPB1

Accessories



SPI 8 PA SPB1-10

Part no..:10.01.06.03710

Size: 8
Material: Polyamide
Use: SPB1-10

Spare parts



SC 030 M5-AG

Part no..:10.01.06.02802

Connection geometry: 030
Connection: M5-M
Length L1: 15.5 mm
Fitting length: 5 mm
Nominal diameter dn: 1.8 mm

Bellows suction cups (round)

SPB1 10 ED-65 M5-AG

Part no..:10.01.06.03489

https://www.schmalz.com/10.01.06.03489



SPB1 10 ED-65 SC030

Part no..:10.01.06.02782

Size: 10
Suction cup material: Elastodur ED
Material hardness [Shore A]: 65 Shore A
Number of folds: 1.5

Contact Schmalz

Schmalz Inc. | 5850 Oak Forest Drive, Raleigh, NC 27616, United States | +1 (919) 713-0880 | schmalz.us@schmalz.com