Crystal Clock Oscillator Specification

Part No. + Packaging: ***LFSPXO018040***

Customer Part:

Description

- Standard 7 x 5mm crystal oscillator in a ceramic package with a seam sealed metal lid, hermetically sealed.
- Model CFPS-73
- Model Issue number 14



Frequency Parameters

- Frequency 32.0MHz
- Frequency Stability ±50.00ppm
- Operating Temperature Range 0.00 to 70.00°C
- Ageing ±3ppm per year max

Electrical Parameters

- Supply Voltage 3.3V ±10%
- Current Draw 20.000mA
- Note: parameters are referenced to 15pF load

Output Details

- Output Compatibility HCMOS
- Drive Capability 15pF std, 50pF max
- Rise and Fall Time 10.0ns max
- Duty Cycle 45/55
- Start up time: 10ms max.
  0.9ms typ to 90% of final amplitude (under ideal conditions @ 25°C)

Output Control

- Standby Operation:
  Logic '1' (>70% VS) to pad 1 enables oscillator output
  Logic '0' (<30% VS) to pad 1 disables oscillator output; the oscillator output goes to the high impedance state
  No connection to pad 1 enables oscillator output
  Standby Current: 10µA max, 0.9µA typ @ 25°C

Noise Parameters

- Phase Noise @125MHz (typical):
  10Hz -54dBc
  100Hz -92dBc
  1kHz -130dBc
  10kHz -149dBc
  100kHz -159dBc
  1MHz -163dBc
- RMS Phase Jitter @125MHz: 52fs typical

Environmental Parameters

- Shock: MIL-STD-202, Method 213, Condition E
- Vibration: MIL-STD-883, Method 2007, Condition A
- Storage Temperature Range: -55 to 125°C

Manufacturing Details

- RoHS Terminations NiAu
- RoHS Reflow Temp 260degC 10s

Outline (mm)

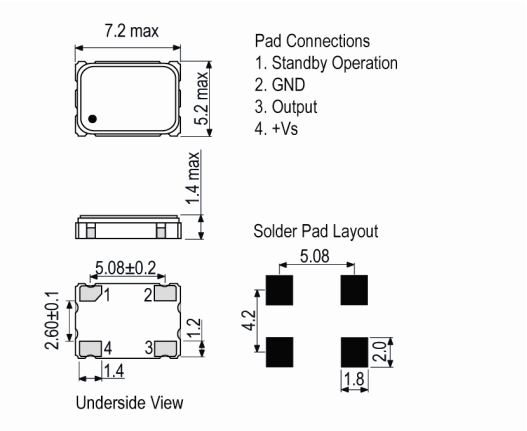

Test Circuit

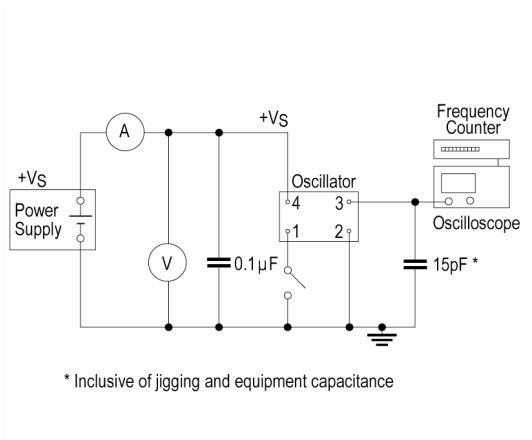

Sales Office Contact Details:

UK: +44 (0)1460 270200

USA: +1.760 668 8935

Email: info@iqdfrequencyproducts.com

Web: www.iqdfrequencyproducts.com

Customer Part:

Compliance

- RoHS Status (2015/863/EU) Compliant
- REACh Status Compliant
- MSL Rating (JDEC-STD-033): Not Applicable

Packaging Details

- Tape & reel in accordance with EIA-481
  Quantities below the standard reel size to be supplied on cut tape.
  Standard Quantity: 1,000 Pieces

Wave Form

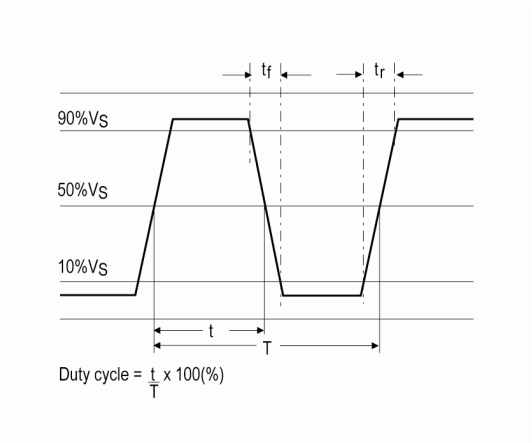

Phase Noise / Jitter

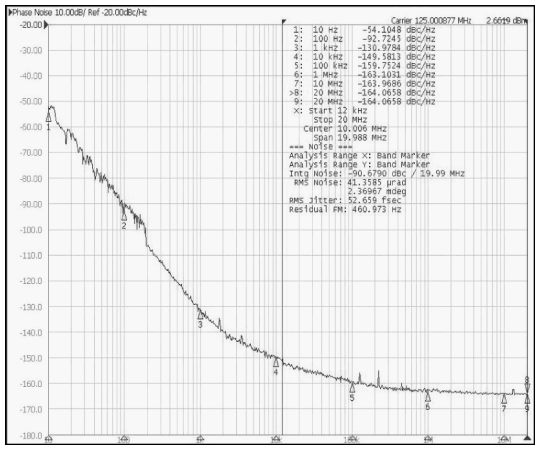

Sales Office Contact Details:
UK: +44 (0)1460 270200
USA: +1.760 668 8935
Email: info@iqdfrequencyproducts.com
Web: www.iqdfrequencyproducts.com