Crystal Clock Oscillator Specification

Part No. + Packaging: ***LFSPXO009618Bulk***

Customer Part:

Description

- Surface mount oscillator in a ceramic package with a hermetically sealed metal lid
- Model CFPS-32
- Model Issue number 13

Frequency Parameters

- Frequency 125.0MHz
- Frequency Stability ±50.00ppm
- Operating Temperature Range -40.00 to 85.00°C

Electrical Parameters

- Supply Voltage 2.5V ±5%
- Current Draw 30.000mA

Output Details

- Output Compatibility CMOS
- Drive Capability 15pF max
- Rise and Fall Time 3.0ns max
- Duty Cycle 40/60%

Output Control

- Logic '1' (>70% VS) to pad 1 enables oscillator output
  Logic '0' (<30% VS) to pad 1 disables oscillator output; the oscillator output goes to the high impedance state
  No connection to pad 1 enables oscillator output
- Standby Current: 10µA max

Environmental Parameters

- Storage Temperature Range: –55 to 125°C
- Shock: MIL-STD-202, Method 213, Condition E
- Vibration: MIL-STD-883, Method 2007, Condition A

Manufacturing Details

- RoHS Terminations NiAu
- RoHS Reflow Temp 260degC 10s

Compliance

- RoHS Status (2015/863/EU) Compliant
- REACh Status Compliant
- MSL Rating (JDEC-STD-033): Not Applicable

Packaging Details

- Pack Style: Bulk Loose in bulk pack
  Pack Size: 100
- *Alternative packing option available*



Outline (mm)

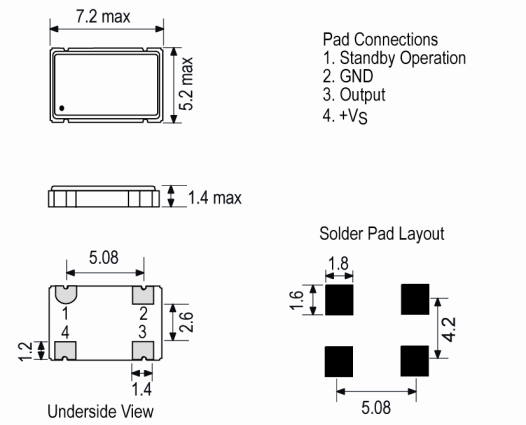

Test Circuit

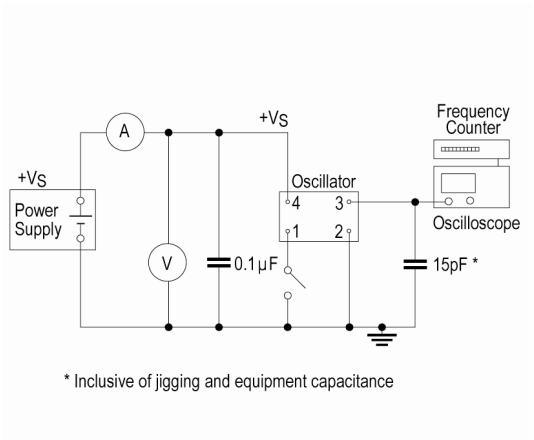

* Inclusive of jigging and equipment capacitance

Sales Office Contact Details:

UK: +44 (0)1460 270200

USA: +1 760 668 8935

Email: info@iqdfrequencyproducts.com

Web: www.iqdfrequencyproducts.com

Customer Part:

Wave Form

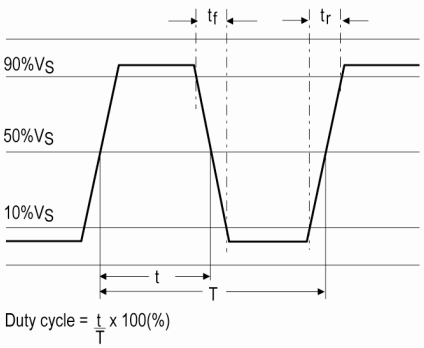

Duty cycle = $\frac{t}{T}$ x 100(%)

Sales Office Contact Details:
UK: +44 (0)1460 270200
USA: +1 760 668 8935
Email: info@iqdfrequencyproducts.com
Web: www.iqdfrequencyproducts.com