TLV915x-Q1 4.5MHz, Rail-to-Rail Input or Output, Low Offset Voltage, Low Noise Automotive Op Amp

1 Features

- AEC-Q100 qualified for automotive applications
  - Temperature grade 1: –40°C to +125°C, T_A
  - Device HBM ESD classification level 3A
  - Device CDM ESD classification level C6
- Low offset voltage: ±125µV
- Low offset voltage drift: ±0.3µV/°C
- Low noise: 10.8nV/√Hz at 1kHz
- High common-mode rejection: 120dB
- Low bias current: ±10pA
- Rail-to-rail input and output
- Wide bandwidth: 4.5MHz GBW
- High slew rate: 21V/µs
- Low quiescent current: 560µA per amplifier
- Wide supply: ±1.35V to ±8V, 2.7V to 16V
- Robust EMIRR performance: EMI/RFI filters on input pins

2 Applications

- Optimized for AEC-Q100 grade 1 applications
- Infotainment and cluster
- Passive safety
- Body electronics and lighting
- HEV/EV inverter and motor control
- On-board (OBC) and wireless charger
- Powertrain current sensor
- Advanced driver assistance systems (ADAS)
- High-side and low-side current sensing

3 Description

The TLV915x-Q1 family (TLV9151-Q1, TLV9152-Q1, and TLV9154-Q1) is a family of 16V, general purpose automotive operational amplifiers. These devices offer exceptional DC precision and AC performance, including rail-to-rail output, low offset (±125µV, typical), low offset drift (±0.3µV/°C, typical), and 4.5MHz bandwidth.

Convenient features such as wide differential input-voltage range, high output current (±75mA), high slew rate (21V/µs), and low noise (10.8nV/√Hz) make the TLV915x-Q1 a robust, low-noise operational amplifier for automotive applications.

The TLV915x-Q1 family of op amps is available in standard packages and is specified from –40°C to 125°C.

Device Information

PART NUMBER	CHANNEL COUNT	PACKAGE(1)	PACKAGE SIZE(2)
TLV9151-Q1	Single	DBV (SOT-23, 5)	2.9mm × 2.8mm
		DCK (SC70, 5)	2mm x 2.1mm
	Single, shutdown	DBV (SOT-23, 6)	2.9mm × 2.8mm
TLV9152-Q1	Dual	D (SOIC, 8)	4.9mm × 6mm
		PW (TSSOP, 8)	3mm × 6.4mm
		DGK (VSSOP, 8)	3mm × 4.9mm
TLV9154-Q1	Quad	D (SOIC, 14)	8.65mm × 6mm
		DYY (SOT-23, 14)	4.2mm × 3.26mm
		PW (TSSOP, 14)	5mm × 6.4mm

(1) For all available packages, see the orderable addendum at the end of the data sheet.
(2) The package size (length × width) is a nominal value and includes pins, where applicable.

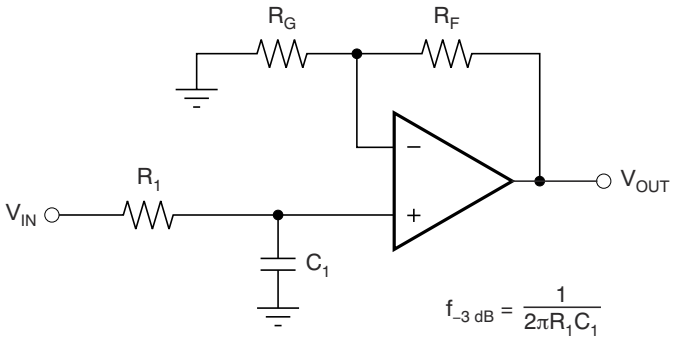

$$\frac{V_{OUT}}{V_{IN}} = \left(1 + \frac{R_F}{R_G}\right)\left(\frac{1}{1 + sR_1C_1}\right)$$

TLV915x-Q1 in a Single-Pole, Low-Pass Filter

An IMPORTANT NOTICE at the end of this data sheet addresses availability, warranty, changes, use in safety-critical applications, intellectual property matters and other important disclaimers. PRODUCTION DATA.

Table of Contents

1 Features....1
2 Applications....1
3 Description....1
4 Pin Configuration and Functions....3
5 Specifications....6
5.1 Absolute Maximum Ratings....6
5.2 ESD Ratings....6
5.3 Recommended Operating Conditions....6
5.4 Thermal Information for Single Channel....7
5.5 Thermal Information for Dual Channel....7
5.6 Thermal Information for Quad Channel....7
5.7 Electrical Characteristics....8
5.8 Typical Characteristics....11
6 Detailed Description....18
6.1 Overview....18
6.2 Functional Block Diagram....18
6.3 Feature Description....19
6.4 Device Functional Modes....25
7 Application and Implementation....26
7.1 Application Information....26
7.2 Typical Applications....26
7.3 Power Supply Recommendations....27
7.4 Layout....28
8 Device and Documentation Support....30
8.1 Device Support....30
8.2 Documentation Support....30
8.3 Receiving Notification of Documentation Updates....30
8.4 Support Resources....30
8.5 Electrostatic Discharge Caution....31
8.6 Glossary....31
9 Revision History....31
10 Mechanical, Packaging, and Orderable Information....32

Copyright © 2024 Texas Instruments Incorporated

4 Pin Configuration and Functions

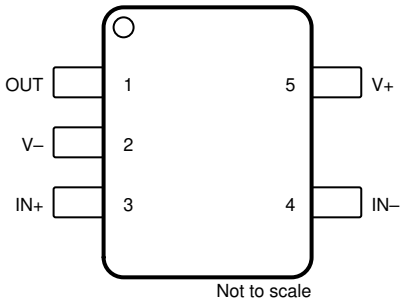

Figure 4-1. TLV9151-Q1 DBV Package, 5-Pin SOT-23 (Top View)

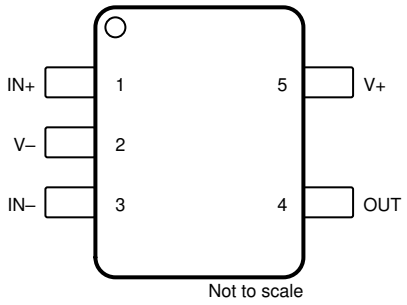

Figure 4-2. TLV9151-Q1 DCK Package, 5-Pin SC70 (Top View)

Table 4-1. Pin Functions: TLV9151-Q1

PIN			TYPE(1)	DESCRIPTION
NAME	DBV	DCK		
IN+	3	1	I	Noninverting input
IN–	4	3	I	Inverting input
OUT	1	4	O	Output
V+	5	5	—	Positive (highest) power supply
V–	2	2	—	Negative (lowest) power supply

(1) I = input, O = output

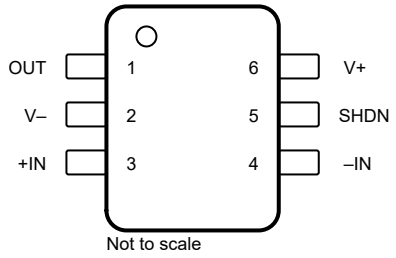

Figure 4-3. TLV9151S-Q1 DBV Package, 6-Pin SOT-23 (Top View)

Table 4-2. Pin Functions: TLV9151S-Q1

PIN		TYPE1	DESCRIPTION
NAME	NO.		
IN+	3	I	Noninverting input
IN–	4	I	Inverting input
OUT	1	O	Output
SHDN	5	I	Shutdown: low = amplifier enabled, high = amplifier disabled. See Section 6.3.9 for more information.
V+	6	—	Positive (highest) power supply
V–	2	—	Negative (lowest) power supply

1. I = input, O = output

Copyright © 2024 Texas Instruments Incorporated

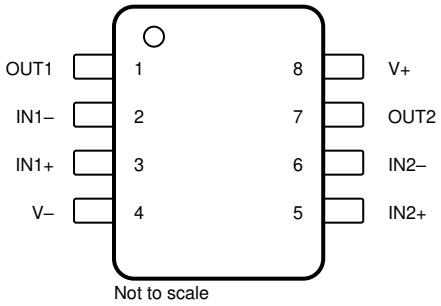

Figure 4-4. TLV9152-Q1 D, PW and DGK Package, 8-Pin SOIC, TSSOP and VSSOP (Top View)

Table 4-3. Pin Functions: TLV9152-Q1

PIN		TYPE[1]	DESCRIPTION
NAME	NO.		
IN1+	3	I	Noninverting input, channel 1
IN2+	5	I	Noninverting input, channel 2
IN1–	2	I	Inverting input, channel 1
IN2–	6	I	Inverting input, channel 2
OUT1	1	O	Output, channel 1
OUT2	7	O	Output, channel 2
V+	8	—	Positive (highest) power supply
V–	4	—	Negative (lowest) power supply

(1) I = input, O = output

Copyright © 2024 Texas Instruments Incorporated

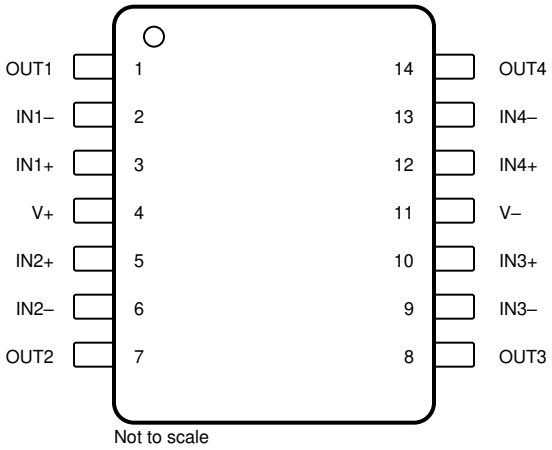

Figure 4-5. TLV9154-Q1 D, DYY, and PW Package, 14-Pin SOIC, SOT-23, and TSSOP (Top View)

Table 4-4. Pin Functions: TLV9154-Q1

PIN		TYPE[1]	DESCRIPTION
NAME	NO.		
IN1+	3	I	Noninverting input, channel 1
IN1–	2	I	Inverting input, channel 1
IN2+	5	I	Noninverting input, channel 2
IN2–	6	I	Inverting input, channel 2
IN3+	10	I	Noninverting input, channel 3
IN3–	9	I	Inverting input, channel 3
IN4+	12	I	Noninverting input, channel 4
IN4–	13	I	Inverting input, channel 4
OUT1	1	O	Output, channel 1
OUT2	7	O	Output, channel 2
OUT3	8	O	Output, channel 3
OUT4	14	O	Output, channel 4
V+	4	—	Positive (highest) power supply
V–	11	—	Negative (lowest) power supply

(1) I = input, O = output

Copyright © 2024 Texas Instruments Incorporated

5 Specifications

5.1 Absolute Maximum Ratings

over operating ambient temperature range (unless otherwise noted) (1)

		MIN	MAX	UNIT
Supply voltage, V_S = (V+) – (V–)		0	20	V
Signal input pins	Common-mode voltage (3)	(V–) – 0.5	(V+) + 0.5	V
	Differential voltage (3)		V_S + 0.2	V
	Current (3)	–10	10	mA
Output short-circuit (2)		Continuous		
Operating ambient temperature, T_A		–55	150	°C
Junction temperature, T_J			150	°C
Storage temperature, T_{stg}		–65	150	°C

(1) Operation outside the *Absolute Maximum Ratings* may cause permanent device damage. *Absolute Maximum Ratings* do not imply functional operation of the device at these or any other conditions beyond those listed under *Recommended Operating Conditions*. If used outside the *Recommended Operating Conditions* but within the *Absolute Maximum Ratings,* the device may not be fully functional, and this may affect device reliability, functionality, performance, and shorten the device lifetime.
(2) Short-circuit to ground, one amplifier per package.
(3) Input pins are diode-clamped to the power-supply rails. Input signals that may swing more than 0.5 V beyond the supply rails must be current limited to 10 mA or less.

5.2 ESD Ratings

				VALUE	UNIT
$V_{(ESD)}$	Electrostatic discharge	Human body model (HBM), per AEC Q100-002(1)	TLV9151SQDBVRQ1 only	±1000	V
			All other devices	±2000	
		Charged device model (CDM), per AEC Q100-011		±1000	

(1) AEC Q100-002 indicates that HBM stressing shall be in accordance with the ANSI/ESDA/JEDEC JS-001 specification.

5.3 Recommended Operating Conditions

over operating ambient temperature range (unless otherwise noted)

		MIN	MAX	UNIT
V_S	Supply voltage, (V+) – (V–)	2.7	16	V
V_I	Input voltage range	(V–) – 0.1	(V+) + 0.1	V
V_{IH}	High level input voltage at shutdown pin (amplifier enabled)	1.1	(V+)	V
V_{IL}	Low level input voltage at shutdown pin (amplifier disabled)	(V–)	0.2	V
T_A	Specified ambient temperature	–40	125	°C

Copyright © 2024 Texas Instruments Incorporated

5.4 Thermal Information for Single Channel

THERMAL METRIC (1)		TLV9151-Q1, TLV9151S-Q1			UNIT
		DBV (SOT-23)		DCK (SC70)	
		5 PINS	6 PINS	5 PINS	
$R_{\theta JA}$	Junction-to-ambient thermal resistance	187.4	167.8	202.6	°C/W
$R_{\theta JC(top)}$	Junction-to-case (top) thermal resistance	86.2	107.9	101.5	°C/W
$R_{\theta JB}$	Junction-to-board thermal resistance	54.6	49.7	47.8	°C/W
ψ_{JT}	Junction-to-top characterization parameter	27.8	33.9	18.8	°C/W
ψ_{JB}	Junction-to-board characterization parameter	54.3	49.5	47.4	°C/W
$R_{\theta JC(bot)}$	Junction-to-case (bottom) thermal resistance	N/A	N/A	N/A	°C/W

(1) For more information about traditional and new thermal metrics, see the *Semiconductor and IC Package Thermal Metrics* application report, SPRA953.

5.5 Thermal Information for Dual Channel

THERMAL METRIC (1)		TLV9152-Q1			Unit
		D (SOIC)	DGK (VSSOP)	PW (TSSOP)	
		8 PINS	8 PINS	8 PINS	
$R_{\theta JA}$	Junction-to-ambient thermal resistance	132.6	176.5	185.1	°C/W
$R_{\theta JC(top)}$	Junction-to-case (top) thermal resistance	73.4	68.1	74.0	°C/W
$R_{\theta JB}$	Junction-to-board thermal resistance	76.1	98.2	115.7	°C/W
ψ_{JT}	Junction-to-top characterization parameter	24.0	12.0	12.3	°C/W
ψ_{JB}	Junction-to-board characterization parameter	75.4	96.7	114.0	°C/W
$R_{\theta JC(bot)}$	Junction-to-case (bottom) thermal resistance	N/A	N/A	N/A	°C/W

(1) For more information about traditional and new thermal metrics, see the *Semiconductor and IC Package Thermal Metrics* application report, SPRA953.

5.6 Thermal Information for Quad Channel

THERMAL METRIC (1)		TLV9154-Q1			UNIT
		D (SOIC)	DYY (SOT-23)	PW (TSSOP)	
		14 PINS	14 PINS	14 PINS	
$R_{\theta JA}$	Junction-to-ambient thermal resistance	101.4	110.7	118.0	°C/W
$R_{\theta JC(top)}$	Junction-to-case (top) thermal resistance	57.6	55.9	47.6	°C/W
$R_{\theta JB}$	Junction-to-board thermal resistance	57.3	35.3	60.9	°C/W
ψ_{JT}	Junction-to-top characterization parameter	18.5	2.3	6.0	°C/W
ψ_{JB}	Junction-to-board characterization parameter	56.9	35.1	60.4	°C/W
$R_{\theta JC(bot)}$	Junction-to-case (bottom) thermal resistance	N/A	N/A	N/A	°C/W

(1) For more information about traditional and new thermal metrics, see the *Semiconductor and IC Package Thermal Metrics* application report, SPRA953.

Copyright © 2024 Texas Instruments Incorporated

5.7 Electrical Characteristics

For V_S = (V+) – (V–) = 2.7 V to 16 V (±1.35 V to ±8 V) at T_A = 25°C, R_L = 10 kΩ connected to V_S / 2, V_{CM} = V_S / 2, and $V_{O\ UT}$ = V_S / 2, unless otherwise noted.

PARAMETER		TEST CONDITIONS		MIN	TYP	MAX	UNIT
OFFSET VOLTAGE							
V_{OS}	Input offset voltage	V_{CM} = V–			±125	±895	µV
			T_A = –40°C to 125°C			±925	
dV_{OS}/dT	Input offset voltage drift		T_A = –40°C to 125°C		±0.3		µV/°C
PSRR	Input offset voltage versus power supply	V_{CM} = V–, V_S = 4 V to 16 V	T_A = –40°C to 125°C		±0.3	±1.5	µV/V
		V_{CM} = V–, V_S = 2.7 V to 16 V(4)			±1	±10.6	
	Channel separation	f = 0 Hz			5		µV/V
INPUT BIAS CURRENT							
I_B	Input bias current				±10		pA
			T_A = –40°C to 125°C(4)			±1	nA
I_{OS}	Input offset current				±10		pA
			T_A = –40°C to 125°C(4)			±1	nA
NOISE							
E_N	Input voltage noise	f = 0.1 Hz to 10 Hz			1.8		$µV_{PP}$
					0.3		$µV_{RMS}$
e_N	Input voltage noise density	f = 1 kHz			10.8		nV/√Hz
		f = 10 kHz			9.4		
i_N	Input current noise	f = 1 kHz			2		fA/√Hz
INPUT VOLTAGE RANGE							
V_{CM}	Common-mode voltage range			(V–) – 0.1		(V+) + 0.1	V
CMRR	Common-mode rejection ratio	V_S = 16 V, (V–) – 0.1 V < V_{CM} < (V+) – 2 V (Main input pair)	T_A = –40°C to 125°C	99	130		dB
		V_S = 4 V, (V–) – 0.1 V < V_{CM} < (V+) – 2 V (Main input pair)		82	100		
		V_S = 2.7 V, (V–) – 0.1 V < V_{CM} < (V+) – 2 V (Main input pair)(4)		75	95		
		V_S = 2.7 V to 16 V, (V+) – 1 V < V_{CM} < (V+) + 0.1 V (Aux input pair)			85		
INPUT CAPACITANCE							
Z_{ID}	Differential				100 || 9		MΩ || pF
Z_{ICM}	Common-mode				6 || 1		TΩ || pF
OPEN-LOOP GAIN							
A_{OL}	Open-loop voltage gain	V_S = 16 V, V_{CM} = V– (V–) + 0.1 V < V_O < (V+) – 0.1 V		120	145		dB
			T_A = –40°C to 125°C		142		
		V_S = 4 V, V_{CM} = V– (V–) + 0.1 V < V_O < (V+) – 0.1 V		104	130		
			T_A = –40°C to 125°C		125		
		V_S = 2.7 V, V_{CM} = V– (V–) + 0.1 V < V_O < (V+) – 0.1 V(4)		101	120		
			T_A = –40°C to 125°C		118		

Copyright © 2024 Texas Instruments Incorporated

5.7 Electrical Characteristics (continued)

For V_S = (V+) – (V–) = 2.7 V to 16 V (±1.35 V to ±8 V) at T_A = 25°C, R_L = 10 kΩ connected to V_S / 2, V_{CM} = V_S / 2, and $V_{O\ UT}$ = V_S / 2, unless otherwise noted.

PARAMETER		TEST CONDITIONS		MIN	TYP	MAX	UNIT
FREQUENCY RESPONSE							
GBW	Gain-bandwidth product				4.5		MHz
SR	Slew rate	V_S = 16 V, G = +1, C_L = 20 pF			21		V/µs
t_S	Settling time	To 0.01%, V_S = 16 V, V_{STEP} = 10 V , G = +1, CL = 20 pF			2.5		µs
		To 0.01%, V_S = 16 V, V_{STEP} = 2 V , G = +1, CL = 20 pF			1.5		
		To 0.1%, V_S = 16 V, V_{STEP} = 10 V , G = +1, CL = 20 pF			2		
		To 0.1%, V_S = 16 V, V_{STEP} = 2 V , G = +1, CL = 20 pF			1		
	Phase margin	G = +1, R_L = 10 kΩ			60		°
	Overload recovery time	V_{IN} × gain > V_S			400		ns
THD+N	Total harmonic distortion + noise (1)	V_S = 16 V, V_O = 3 V_{RMS}, G = 1, f = 1 kHz			0.00021%		
OUTPUT							
	Voltage output swing from rail (positive and negative)	V_S = 16 V, R_L = no load			5	10	mV
			T_A = –40°C to 125°C(4)			15	
		V_S = 16 V, R_L = 10 kΩ			50	55	
			T_A = –40°C to 125°C(4)			75	
		V_S = 16 V, R_L = 2 kΩ			200	250	
			T_A = –40°C to 125°C(4)			350	
		V_S = 2.7 V, R_L = no load			1	6	
			T_A = –40°C to 125°C(4)			10	
		V_S = 2.7 V, R_L = 10 kΩ			5	12	
			T_A = –40°C to 125°C(4)			18	
		V_S = 2.7 V, R_L = 2 kΩ			25	40	
			T_A = –40°C to 125°C(4)			60	
I_{SC}	Short-circuit current				±75		mA
C_{LOAD}	Capacitive load drive				1000		pF
Z_O	Open-loop output impedance	f = 1 MHz, I_O = 0 A			525		Ω
POWER SUPPLY							
I_Q	Quiescent current per amplifier	I_O = 0 A			560	685	µA
		I_O = 0 A, (TLV9151-Q1)			560	691	
		I_O = 0 A	T_A = –40°C to 125°C			750	
		I_O = 0 A, (TLV9151-Q1)				769	
SHUTDOWN							
I_{QSD}	Quiescent current per amplifier	V_S = 2.7 V to 16 V, all amplifiers disabled, $\overline{SHDN}$ = V–			30	45	µA
Z_{SHDN}	Output impedance during shutdown	V_S = 2.7 V to 16 V, amplifier disabled			320 || 2		MΩ || pF
V_{IH}	Logic high threshold voltage (amplifier enabled)				(V–) + 0.8V	(V–) + 1.1V	V
V_{IL}	Logic low threshold voltage (amplifier disabled)			(V–) + 0.2V	(V–) + 0.8V		V
t_{ON}	Amplifier enable time (full shutdown) (2) (3)	G = +1, V_{CM} = V-, V_O = 0.1 × V_S/2			8		µs
t_{ON}	Amplifier enable time (partial shutdown) (2) (3)	G = +1, V_{CM} = V-, V_O = 0.1 × V_S/2			3		
t_{OFF}	Amplifier disable time (2)	V_{CM} = V-, V_O = V_S/2			3		µs

Copyright © 2024 Texas Instruments Incorporated

5.7 Electrical Characteristics (continued)

For V_S = (V+) – (V–) = 2.7 V to 16 V (±1.35 V to ±8 V) at T_A = 25°C, R_L = 10 kΩ connected to V_S / 2, V_{CM} = V_S / 2, and $V_{O\ UT}$ = V_S / 2, unless otherwise noted.

PARAMETER		TEST CONDITIONS	MIN	TYP	MAX	UNIT
	$\overline{SHDN}$ pin input bias current (per pin)	V_S = 2.7 V to 16 V, (V+) ≥ $\overline{SHDN}$ ≥ (V–) + 0.9 V		500		nA
		V_S = 2.7 V to 16 V, (V–) ≤ $\overline{SHDN}$ ≤ (V–) + 0.7 V		150		

(1) Third-order filter; bandwidth = 80 kHz at –3 dB.
(2) Disable time (t_{OFF}) and enable time (t_{ON}) are defined as the time interval between the 50% point of the signal applied to the $\overline{SHDN}$ pin and the point at which the output voltage reaches the 10% (disable) or 90% (enable) level.
(3) Full shutdown refers to the dual TLVxx2S having both channels 1 and 2 disabled ($\overline{SHDN1}$ = $\overline{SHDN2}$ = V–) and the quad TLV9xx4S having all channels 1 to 4 disabled ($\overline{SHDN12}$ = $\overline{SHDN34}$ = V–). For partial shutdown, only one $\overline{SHDN}$ pin is exercised; in this mode, the internal biasing circuitry remains operational and the enable time is shorter.
(4) Specified by characterization only.

Copyright © 2024 Texas Instruments Incorporated

5.8 Typical Characteristics

at T_A = 25°C, V_S = ±8 V, V_{CM} = V_S / 2, R_{LOAD} = 10 kΩ connected to V_S / 2, and C_L = 10 pF (unless otherwise noted)

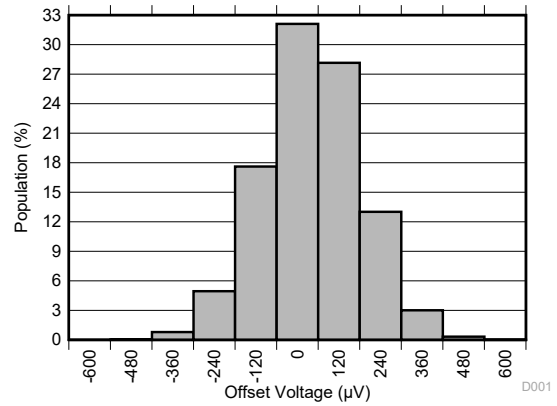

Distribution from 15462 amplifiers, T_A = 25°C

Figure 5-1. Offset Voltage Production Distribution

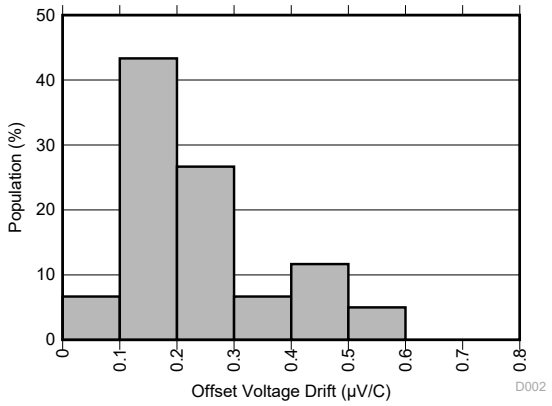

Distribution from 60 amplifiers

Figure 5-2. Offset Voltage Drift Distribution

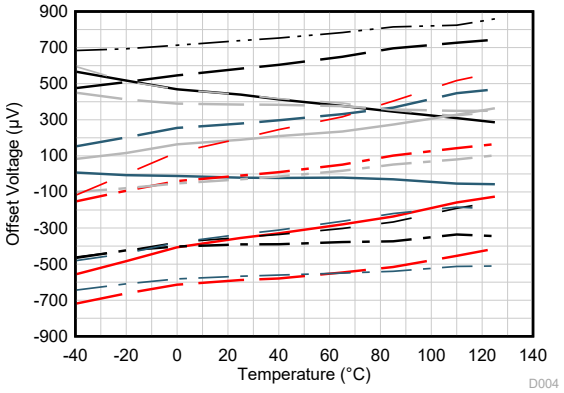

V_{CM} = V+

Figure 5-3. Offset Voltage vs Temperature

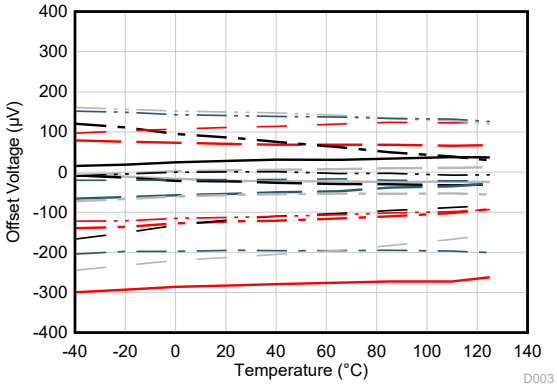

V_{CM} = V–

Figure 5-4. Offset Voltage vs Temperature

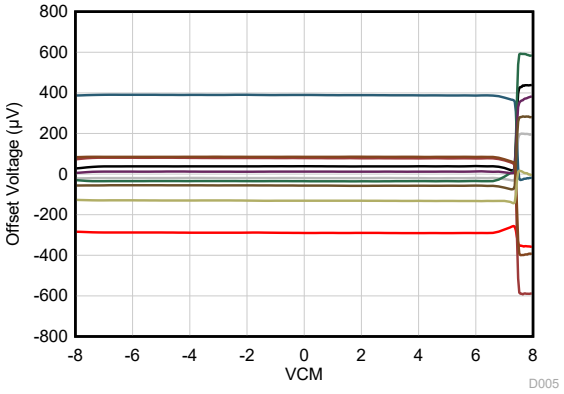

T_A = 25°C

Figure 5-5. Offset Voltage vs Common-Mode Voltage

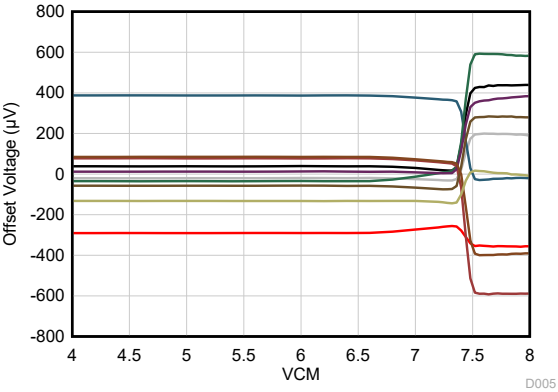

T_A = 25°C

Figure 5-6. Offset Voltage vs Common-Mode Voltage (Transition Region)

Copyright © 2024 Texas Instruments Incorporated

5.8 Typical Characteristics (continued)

at T_A = 25°C, V_S = ±8 V, V_{CM} = V_S / 2, R_{LOAD} = 10 kΩ connected to V_S / 2, and C_L = 10 pF (unless otherwise noted)

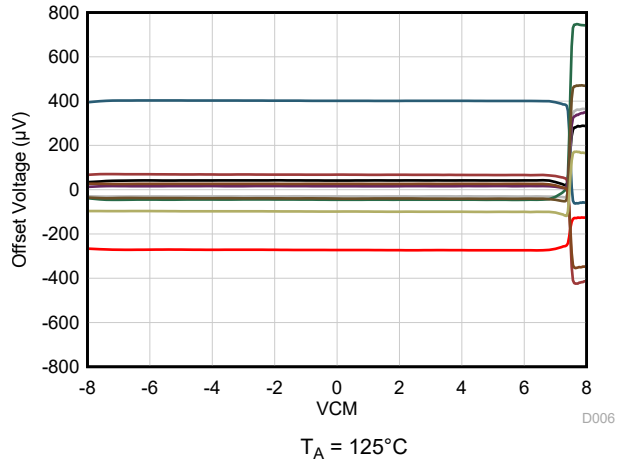

T_A = 125°C

Figure 5-7. Offset Voltage vs Common-Mode Voltage

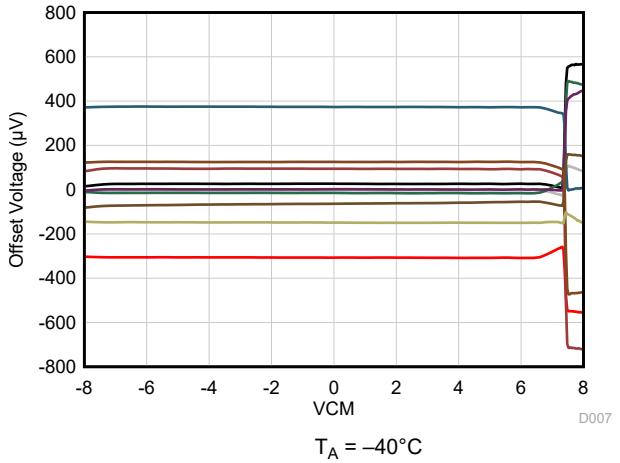

T_A = –40°C

Figure 5-8. Offset Voltage vs Common-Mode Voltage

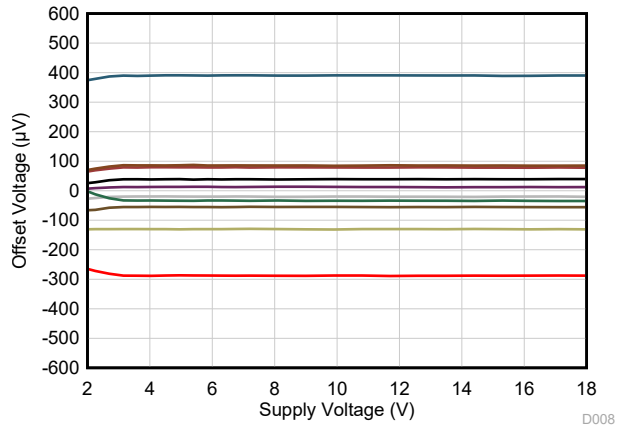

Figure 5-9. Offset Voltage vs Power Supply

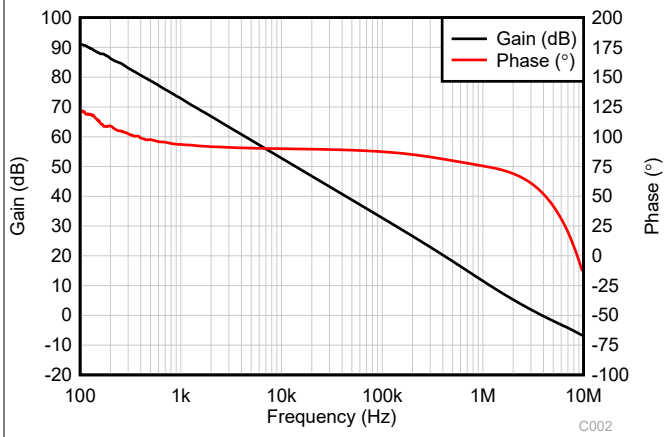

C_L = 20 pF

Figure 5-10. Open-Loop Gain and Phase vs Frequency

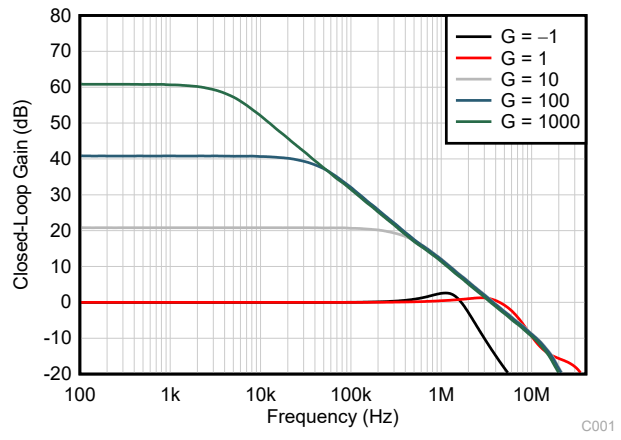

Figure 5-11. Closed-Loop Gain vs Frequency

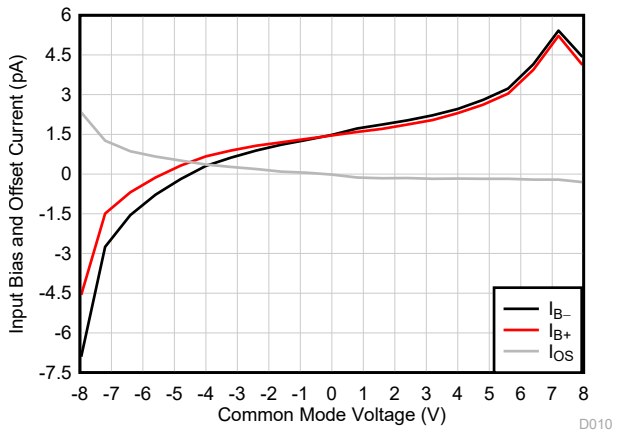

Figure 5-12. Input Bias Current vs Common-Mode Voltage

Copyright © 2024 Texas Instruments Incorporated

5.8 Typical Characteristics (continued)

at T_A = 25°C, V_S = ±8 V, V_{CM} = V_S / 2, R_{LOAD} = 10 kΩ connected to V_S / 2, and C_L = 10 pF (unless otherwise noted)

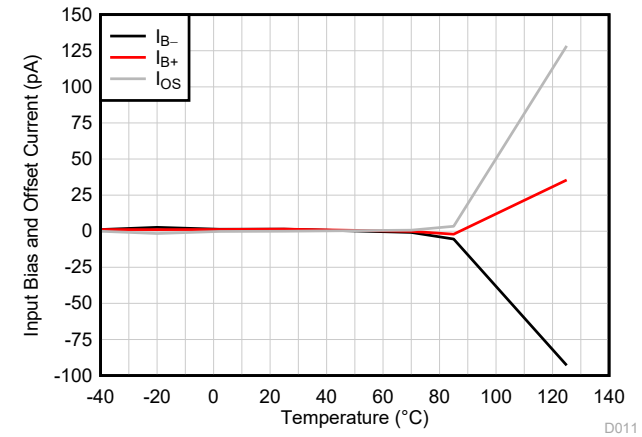

Figure 5-13. Input Bias Current vs Temperature

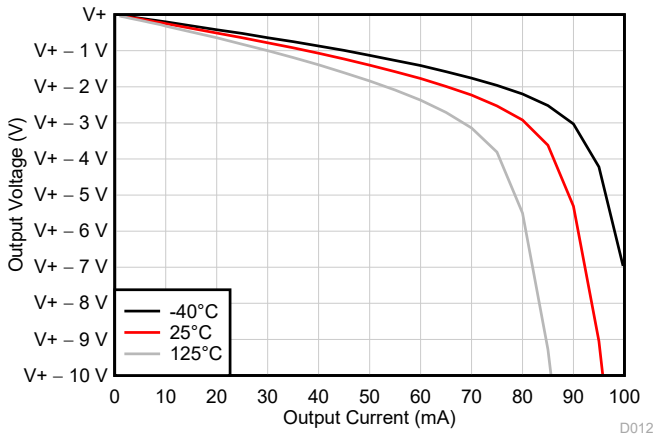

Figure 5-14. Output Voltage Swing vs Output Current (Sourcing)

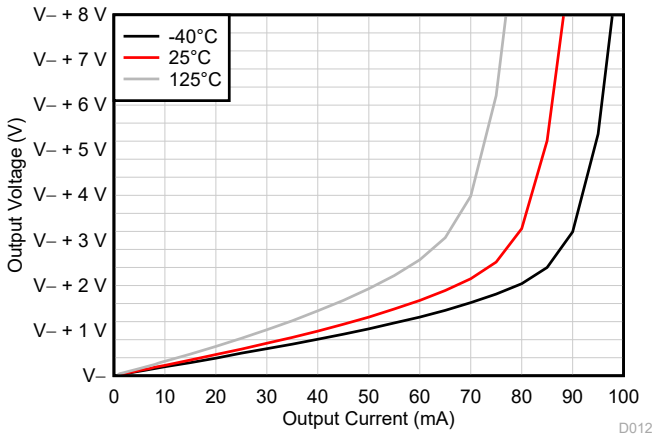

Figure 5-15. Output Voltage Swing vs Output Current (Sinking)

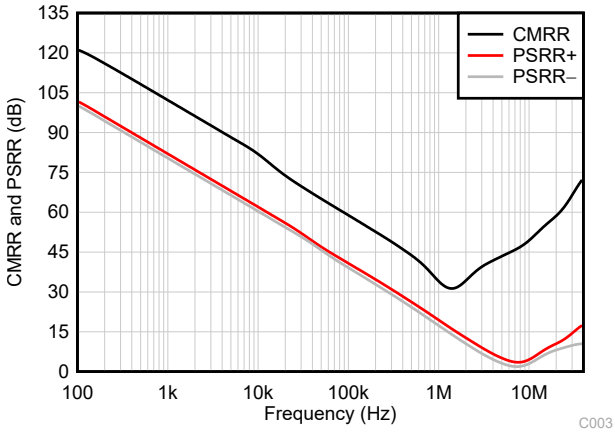

Figure 5-16. CMRR and PSRR vs Frequency

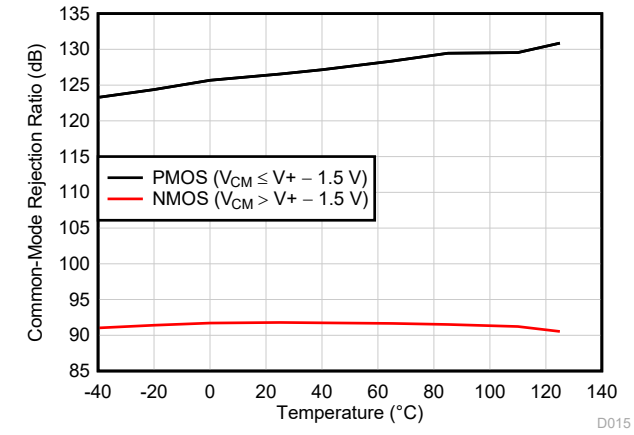

f = 0 Hz

Figure 5-17. CMRR vs Temperature (dB)

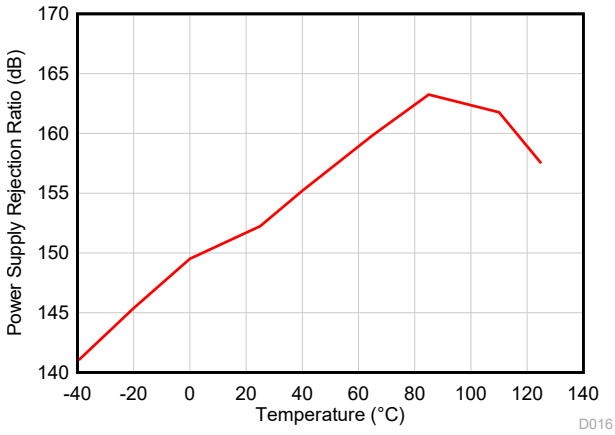

f = 0 Hz

Figure 5-18. PSRR vs Temperature (dB)

Copyright © 2024 Texas Instruments Incorporated

5.8 Typical Characteristics (continued)

at T_A = 25°C, V_S = ±8 V, V_{CM} = V_S / 2, R_{LOAD} = 10 kΩ connected to V_S / 2, and C_L = 10 pF (unless otherwise noted)

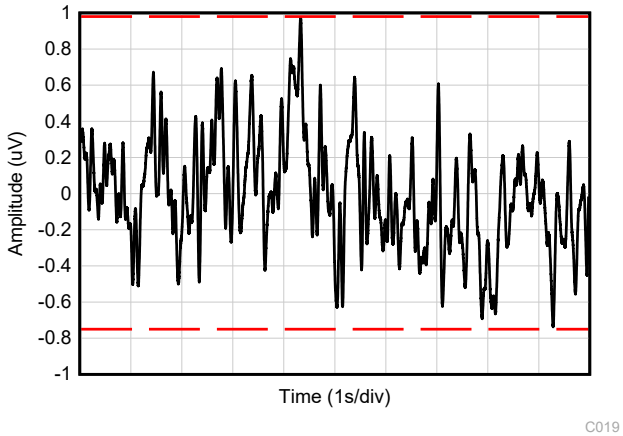

Figure 5-19. 0.1-Hz to 10-Hz Noise

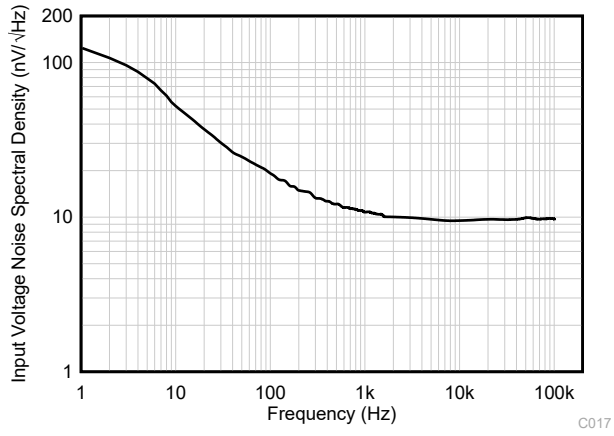

Figure 5-20. Input Voltage Noise Spectral Density vs Frequency

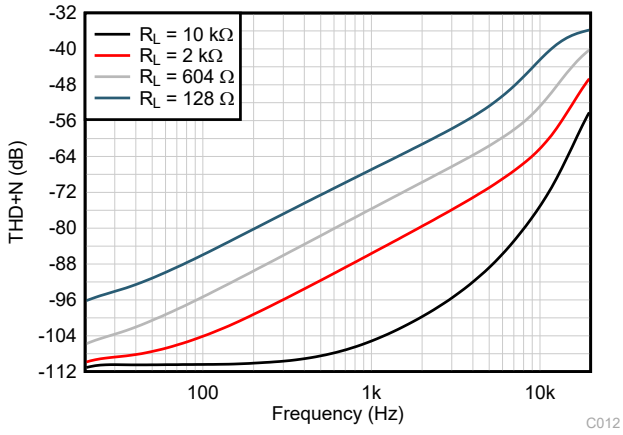

BW = 80 kHz, V_{OUT} = 1 V_{RMS}

Figure 5-21. THD+N Ratio vs Frequency

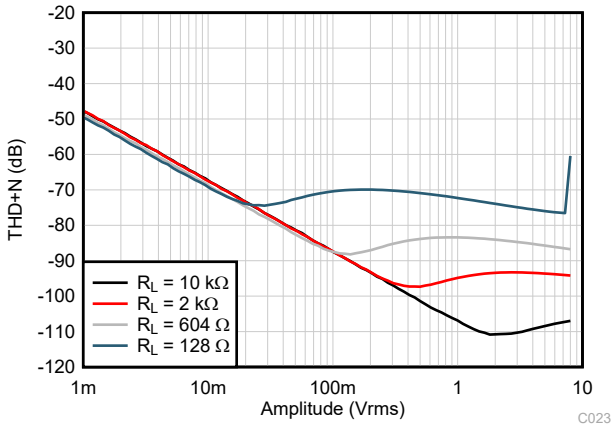

BW = 80 kHz, f = 1 kHz

Figure 5-22. THD+N vs Output Amplitude

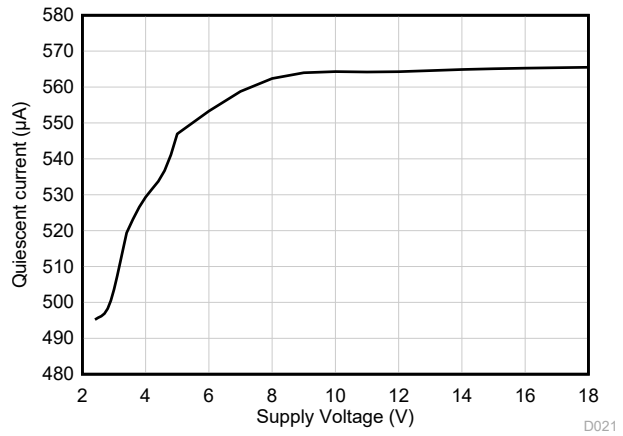

V_{CM} = V–

Figure 5-23. Quiescent Current vs Supply Voltage

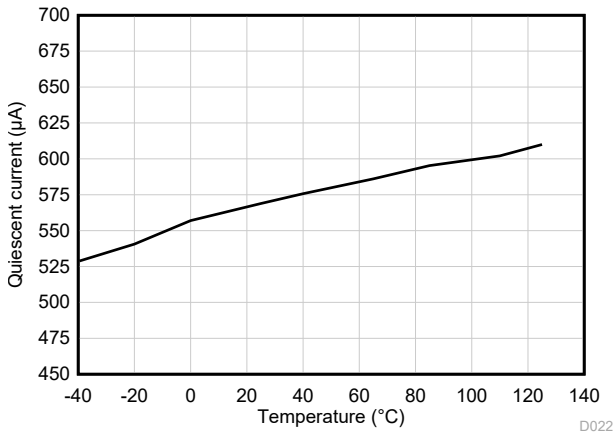

Figure 5-24. Quiescent Current vs Temperature

Copyright © 2024 Texas Instruments Incorporated

5.8 Typical Characteristics (continued)

at T_A = 25°C, V_S = ±8 V, V_{CM} = V_S / 2, R_{LOAD} = 10 kΩ connected to V_S / 2, and C_L = 10 pF (unless otherwise noted)

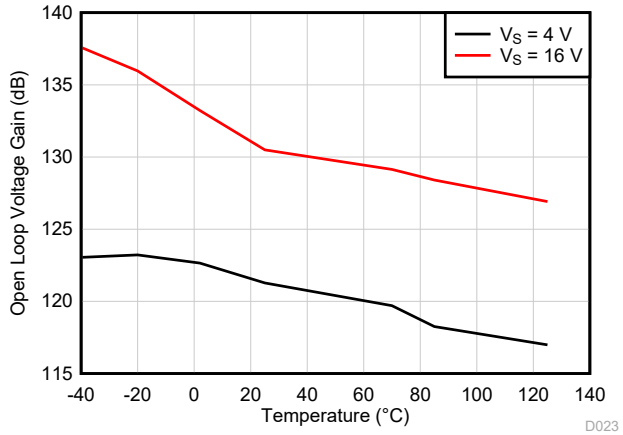

Figure 5-25. Open-Loop Voltage Gain vs Temperature (dB)

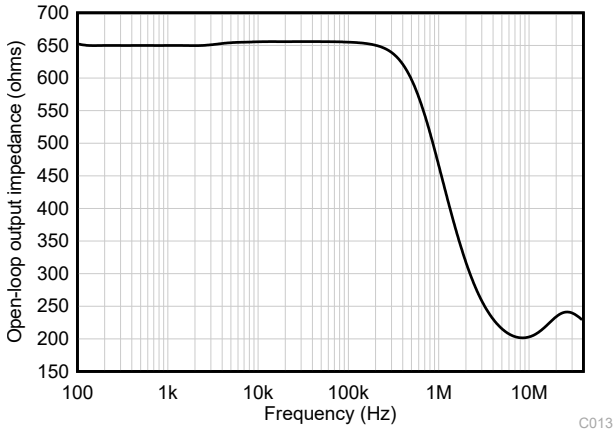

Figure 5-26. Open-Loop Output Impedance vs Frequency

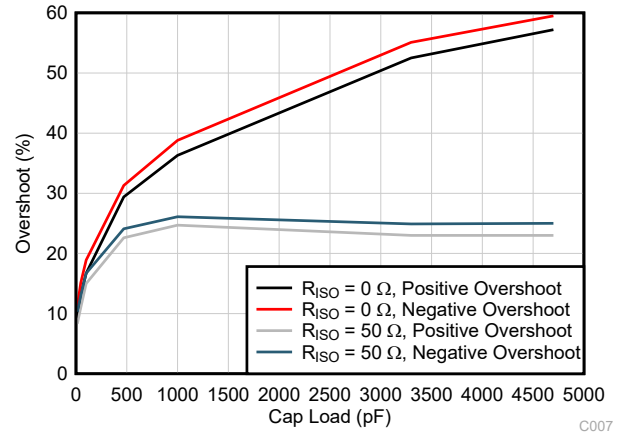

G = –1, 10-mV output step

Figure 5-27. Small-Signal Overshoot vs Capacitive Load

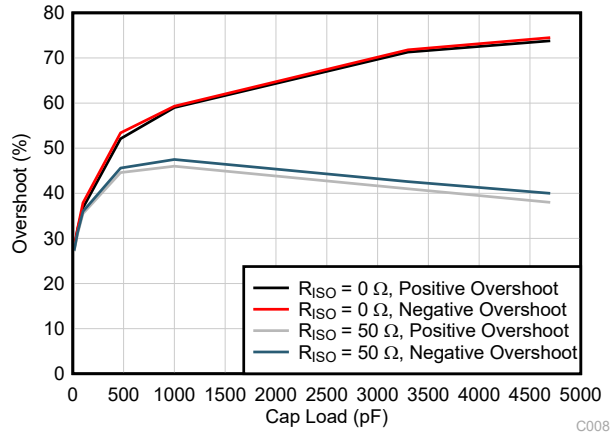

G = 1, 10-mV output step

Figure 5-28. Small-Signal Overshoot vs Capacitive Load

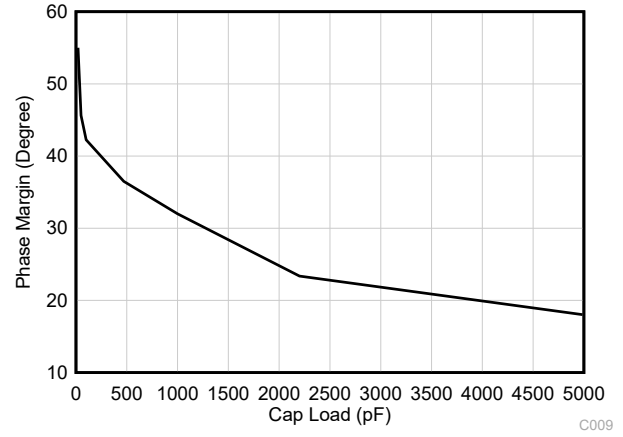

Figure 5-29. Phase Margin vs Capacitive Load

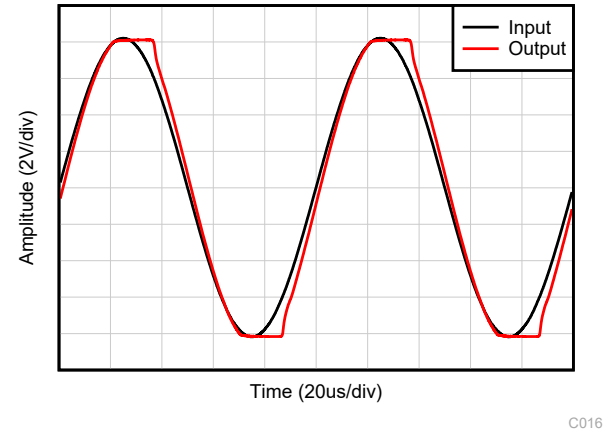

V_{IN} = ±8 V; V_S = V_{OUT} = ±8 V

Figure 5-30. No Phase Reversal

Copyright © 2024 Texas Instruments Incorporated

5.8 Typical Characteristics (continued)

at T_A = 25°C, V_S = ±8 V, V_{CM} = V_S / 2, R_{LOAD} = 10 kΩ connected to V_S / 2, and C_L = 10 pF (unless otherwise noted)

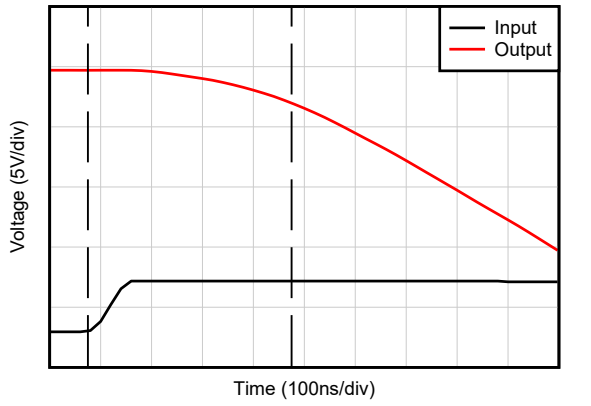

G = –10

Figure 5-31. Positive Overload Recovery

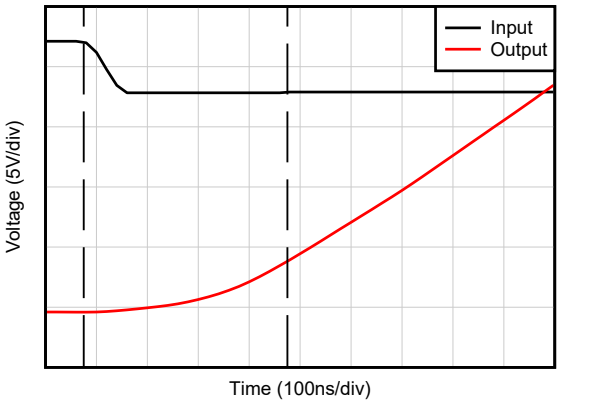

G = –10

Figure 5-32. Negative Overload Recovery

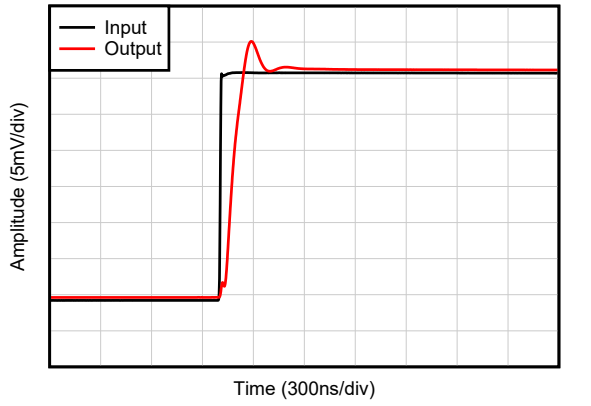

C_L = 20 pF, G = 1, 20-mV step response

Figure 5-33. Small-Signal Step Response, Rising

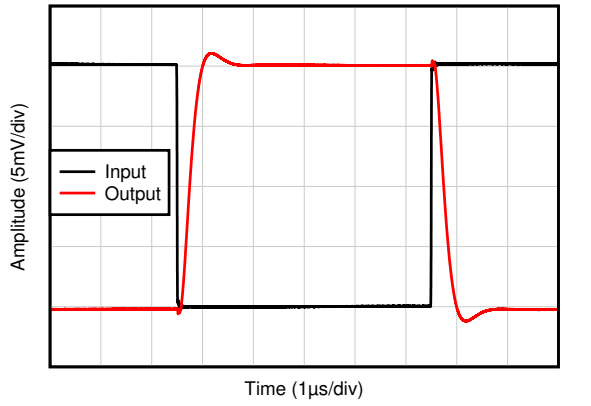

C_L = 20 pF, G = -1, 20-mV step response

Figure 5-34. Small-Signal Step Response

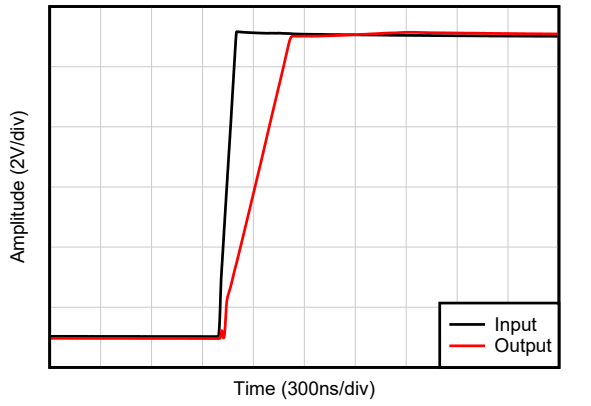

C_L = 20 pF, G = 1

Figure 5-35. Large-Signal Step Response (Rising)

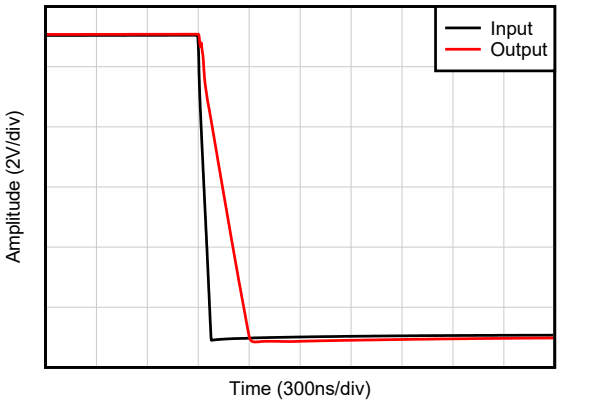

C_L = 20 pF, G = 1

Figure 5-36. Large-Signal Step Response (Falling)

Copyright © 2024 Texas Instruments Incorporated

5.8 Typical Characteristics (continued)

at T_A = 25°C, V_S = ±8 V, V_{CM} = V_S / 2, R_{LOAD} = 10 kΩ connected to V_S / 2, and C_L = 10 pF (unless otherwise noted)

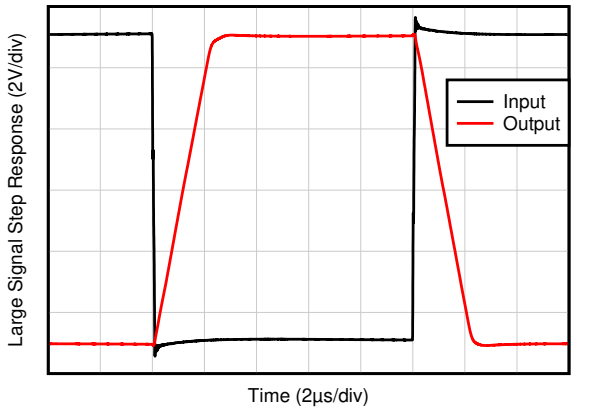

C_L = 20 pF, G = –1

Figure 5-37. Large-Signal Step Response

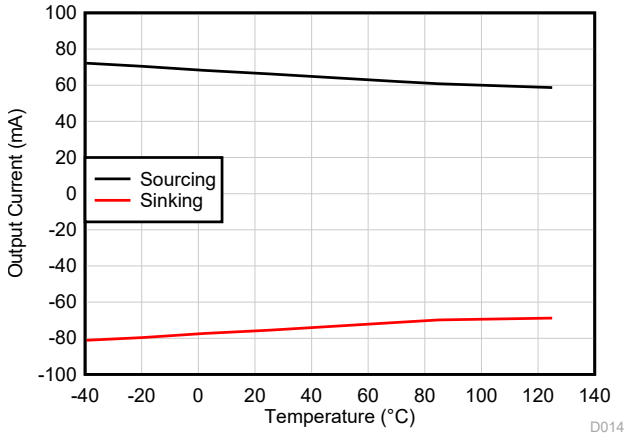

Figure 5-38. Short-Circuit Current vs Temperature

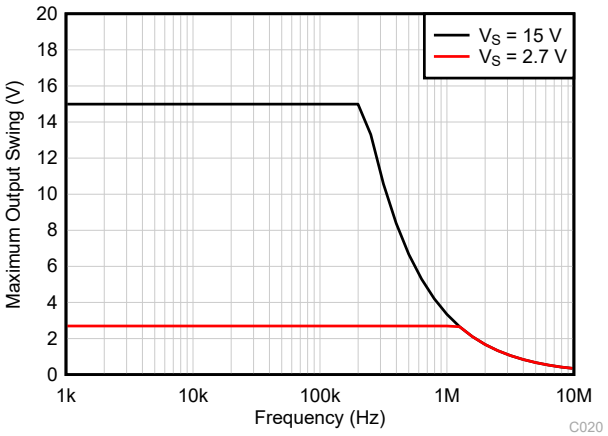

Figure 5-39. Maximum Output Voltage vs Frequency

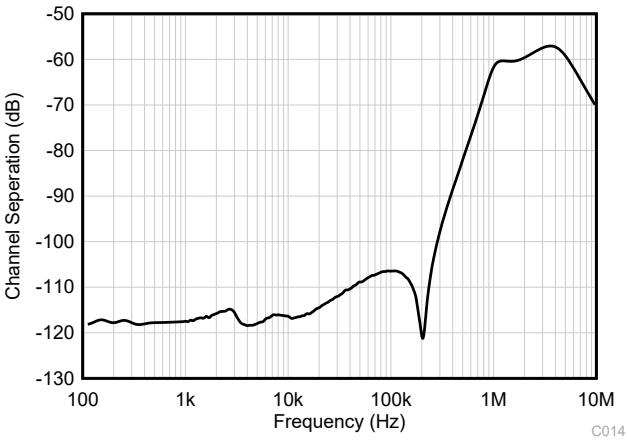

Figure 5-40. Channel Separation vs Frequency

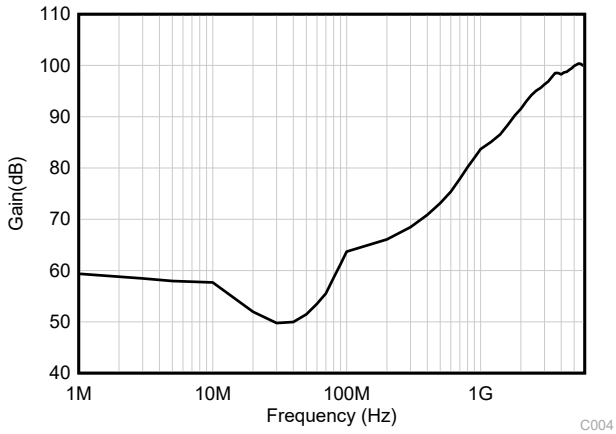

Figure 5-41. EMIRR (Electromagnetic Interference Rejection Ratio) at Inputs vs Frequency

6 Detailed Description

6.1 Overview

The TLV915x-Q1 family (TLV9151-Q1, TLV9152-Q1, and TLV9154-Q1) is a family of 16V general purpose operational amplifiers.

These devices offer excellent DC precision and AC performance, including rail-to-rail input/output, low offset (±125 µV, typical), low offset drift (±0.3 µV/°C, typical), and 4.5-MHz bandwidth.

Wide differential and common-mode input-voltage range, high output current (±75 mA), high slew rate (21 V/µs), low power operation (560 µA, typical), and shutdown functionality make the TLV915x-Q1 a robust, high-speed, high-performance operational amplifier for automotive applications.

6.2 Functional Block Diagram

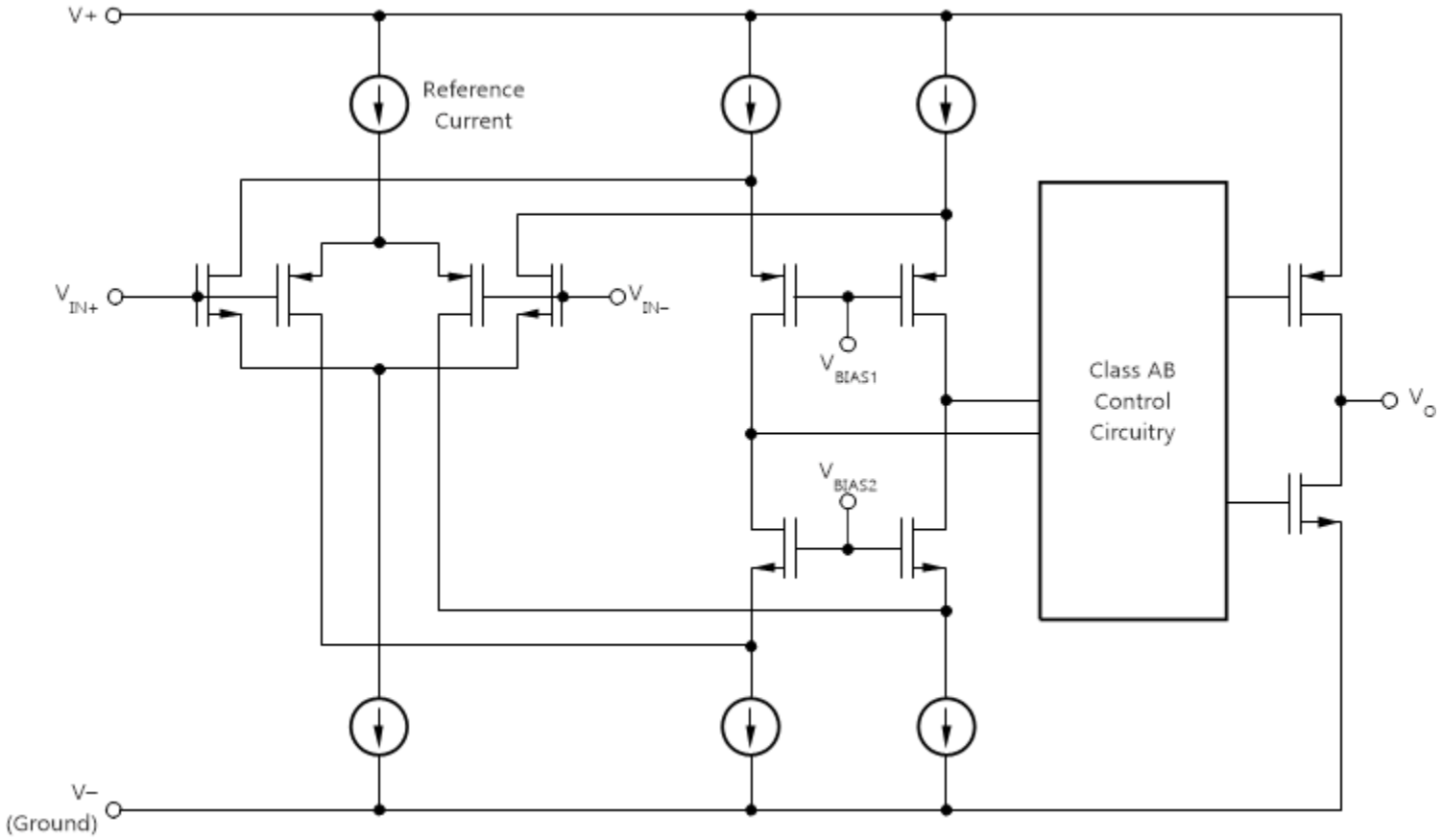

Copyright © 2024 Texas Instruments Incorporated

6.3 Feature Description

6.3.1 EMI Rejection

The TLV915x-Q1 uses integrated electromagnetic interference (EMI) filtering to reduce the effects of EMI from sources such as wireless communications and densely-populated boards with a mix of analog signal chain and digital components. EMI immunity can be improved with circuit design techniques; the TLV915x-Q1 benefits from these design improvements. Texas Instruments has developed the ability to accurately measure and quantify the immunity of an operational amplifier over a broad frequency spectrum extending from 10 MHz to 6 GHz. Figure 6-1 shows the results of this testing on the TLV915x-Q1. Table 6-1 provides the EMIRR IN+ values for the TLV915x-Q1 at particular frequencies commonly encountered in real-world applications. The *EMI Rejection Ratio of Operational Amplifiers* application report contains detailed information on the topic of EMIRR performance as it relates to op amps and is available for download from www.ti.com.

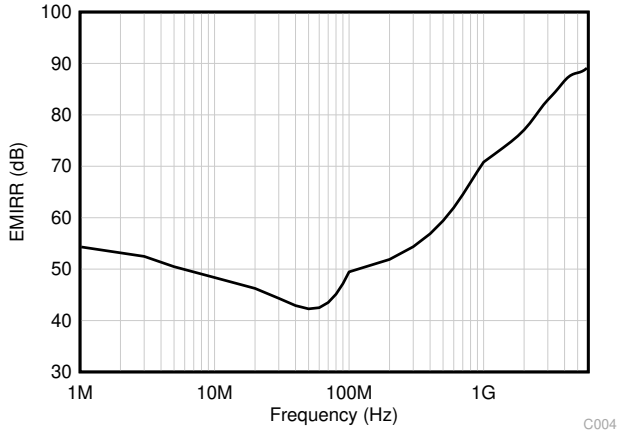

Figure 6-1. EMIRR Testing

Table 6-1. TLV915x-Q1 EMIRR IN+ for Frequencies of Interest

FREQUENCY	APPLICATION OR ALLOCATION	EMIRR IN+
400 MHz	Mobile radio, mobile satellite, space operation, weather, radar, ultra-high frequency (UHF) applications	59.5 dB
900 MHz	Global system for mobile communications (GSM) applications, radio communication, navigation, GPS (to 1.6 GHz), GSM, aeronautical mobile, UHF applications	68.9 dB
1.8 GHz	GSM applications, mobile personal communications, broadband, satellite, L-band (1 GHz to 2 GHz)	77.8 dB
2.4 GHz	802.11b, 802.11g, 802.11n, Bluetooth®, mobile personal communications, industrial, scientific and medical (ISM) radio band, amateur radio and satellite, S-band (2 GHz to 4 GHz)	78.0 dB
3.6 GHz	Radiolocation, aero communication and navigation, satellite, mobile, S-band	88.8 dB
5 GHz	802.11a, 802.11n, aero communication and navigation, mobile communication, space and satellite operation, C-band (4 GHz to 8 GHz)	87.6 dB

Copyright © 2024 Texas Instruments Incorporated

6.3.2 Thermal Protection

The internal power dissipation of any amplifier causes its internal (junction) temperature to rise. This phenomenon is called *self heating*. The absolute maximum junction temperature of the TLV915x-Q1 is 150°C. Exceeding this temperature causes damage to the device. The TLV915x-Q1 has a thermal protection feature that reduces damage from self heating. The protection works by monitoring the temperature of the device and turning off the op amp output drive for temperatures above 170°C. Figure 6-2 shows an application example for the TLV9151-Q1 that has significant self heating because of its power dissipation (0.81 W). Thermal calculations indicate that for an ambient temperature of 65°C, the device junction temperature will reach 177°C. The actual device, however, turns off the output drive to recover towards a safe junction temperature. Figure 6-2 shows how the circuit behaves during thermal protection. During normal operation, the device acts as a buffer so the output is 3 V. When self heating causes the device junction temperature to increase above the internal limit, the thermal protection forces the output to a high-impedance state and the output is pulled to ground through resistor R_L. If the condition that caused excessive power dissipation is not removed, the amplifier will oscillate between a shutdown and enabled state until the output fault is corrected.

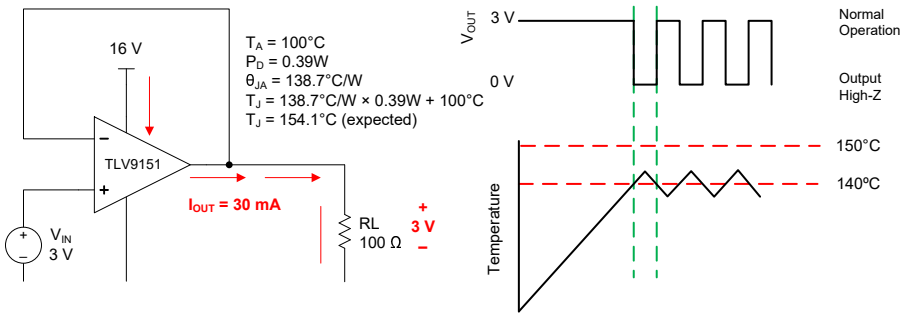

Figure 6-2. Thermal Protection

6.3.3 Capacitive Load and Stability

The TLV915x-Q1 features a resistive output stage capable of driving moderate capacitive loads, and by leveraging an isolation resistor, the device can easily be configured to drive large capacitive loads. Increasing the gain enhances the ability of the amplifier to drive greater capacitive loads; see Figure 6-3 and Figure 6-4. The particular op amp circuit configuration, layout, gain, and output loading are some of the factors to consider when establishing whether an amplifier will be stable in operation.

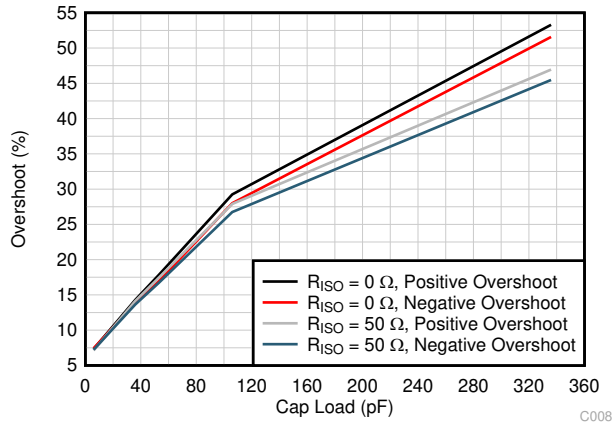

Figure 6-3. Small-Signal Overshoot vs Capacitive Load (10-mV Output Step, G = 1)

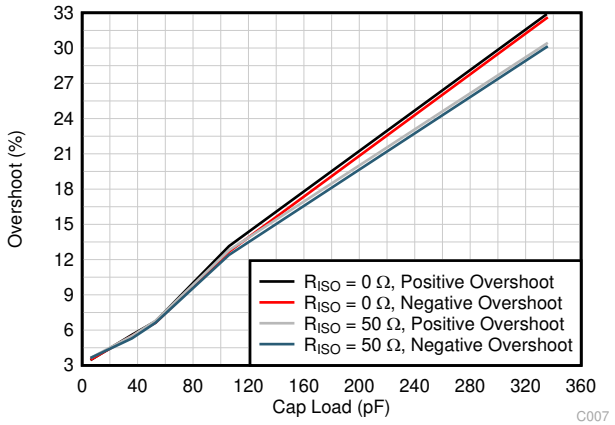

Figure 6-4. Small-Signal Overshoot vs Capacitive Load (10-mV Output Step, G = –1)

Copyright © 2024 Texas Instruments Incorporated

For additional drive capability in unity-gain configurations, improve capacitive load drive by inserting a small resistor, R_{ISO}, in series with the output, as shown in Figure 6-5. This resistor significantly reduces ringing and maintains DC performance for purely capacitive loads. However, if a resistive load is in parallel with the capacitive load, then a voltage divider is created, thus introducing a gain error at the output and slightly reducing the output swing. The error introduced is proportional to the ratio R_{ISO} / R_L, and is generally negligible at low output levels. The high capacitive load drive of the TLV915x-Q1 is designed for applications such as reference buffers, MOSFET gate drives, and cable-shield drives. The circuit shown in Figure 6-5 uses an isolation resistor, R_{ISO}, to stabilize the output of an op amp. R_{ISO} modifies the open-loop gain of the system for increased phase margin.

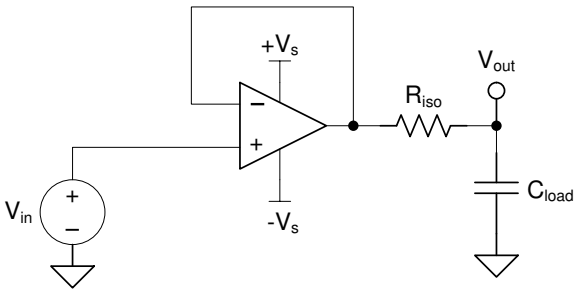

Figure 6-5. Extending Capacitive Load Drive With the TLV9151-Q1

6.3.4 Common-Mode Voltage Range

The TLV915x-Q1 is a 16-V, rail-to-rail input operational amplifier with an input common-mode range that extends 200 mV beyond either supply rail. This wide range is achieved with paralleled complementary N-channel and P-channel differential input pairs, as shown in Figure 6-6. The N-channel pair is active for input voltages close to the positive rail, typically (V+) – 1 V to 100 mV above the positive supply. The P-channel pair is active for inputs from 100 mV below the negative supply to approximately (V+) – 2 V. There is a small transition region, typically (V+) – 2 V to (V+) – 1 V in which both input pairs are on. This transition region can vary modestly with process variation, and within this region PSRR, CMRR, offset voltage, offset drift, noise, and THD performance may be degraded compared to operation outside this region.

Figure 5-5 shows this transition region for a typical device in terms of input voltage offset in more detail.

For more information on common-mode voltage range and PMOS/NMOS pair interaction, see *Op Amps With Complementary-Pair Input Stages* application note.

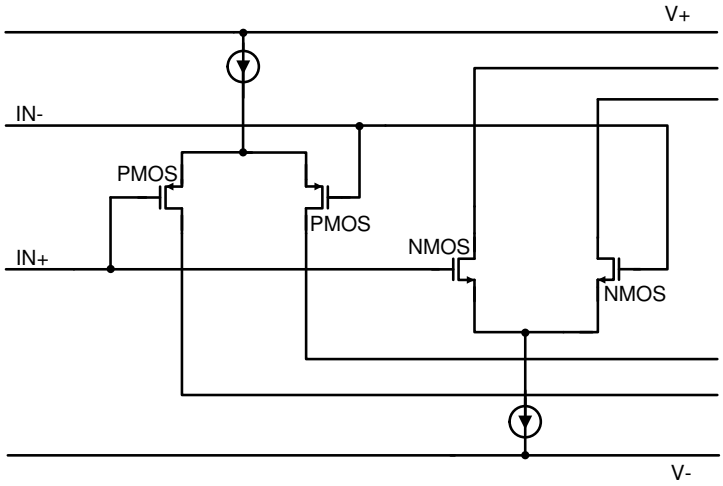

Figure 6-6. Rail-to-Rail Input Stage

6.3.5 Phase Reversal Protection

The TLV915x-Q1 family has internal phase-reversal protection. Many op amps exhibit a phase reversal when the input is driven beyond its linear common-mode range. This condition is most often encountered in non-inverting circuits when the input is driven beyond the specified common-mode voltage range, causing the output to reverse into the opposite rail. The TLV915x-Q1 is a rail-to-rail input op amp; therefore, the common-mode range can extend up to the rails. Input signals beyond the rails do not cause phase reversal; instead, the output limits into the appropriate rail. This performance is shown in Figure 6-7. For more information on phase reversal, see *Op Amps With Complementary-Pair Input Stages* application note.

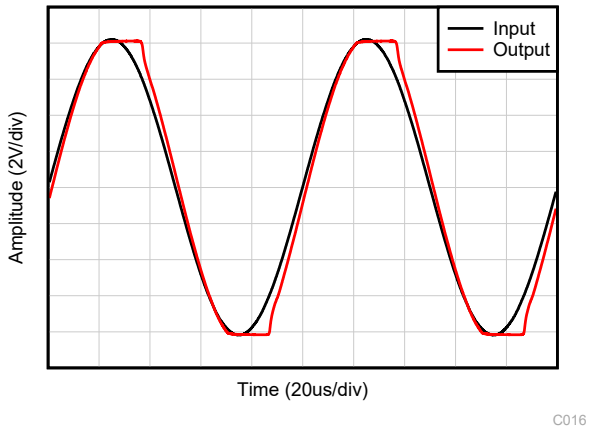

Figure 6-7. No Phase Reversal

Copyright © 2024 Texas Instruments Incorporated

6.3.6 Electrical Overstress

Designers often ask questions about the capability of an operational amplifier to withstand electrical overstress (EOS). These questions tend to focus on the device inputs, but may involve the supply voltage pins or even the output pin. Each of these different pin functions have electrical stress limits determined by the voltage breakdown characteristics of the particular semiconductor fabrication process and specific circuits connected to the pin. Additionally, internal electrostatic discharge (ESD) protection is built into these circuits to protect them from accidental ESD events both before and during product assembly.

Having a good understanding of this basic ESD circuitry and its relevance to an electrical overstress event is helpful. Figure 6-8 shows an illustration of the ESD circuits contained in the TLV915x-Q1 (indicated by the dashed line area). The ESD protection circuitry involves several current-steering diodes connected from the input and output pins and routed back to the internal power-supply lines, where the diodes meet at an absorption device or the power-supply ESD cell, internal to the operational amplifier. This protection circuitry is intended to remain inactive during normal circuit operation.

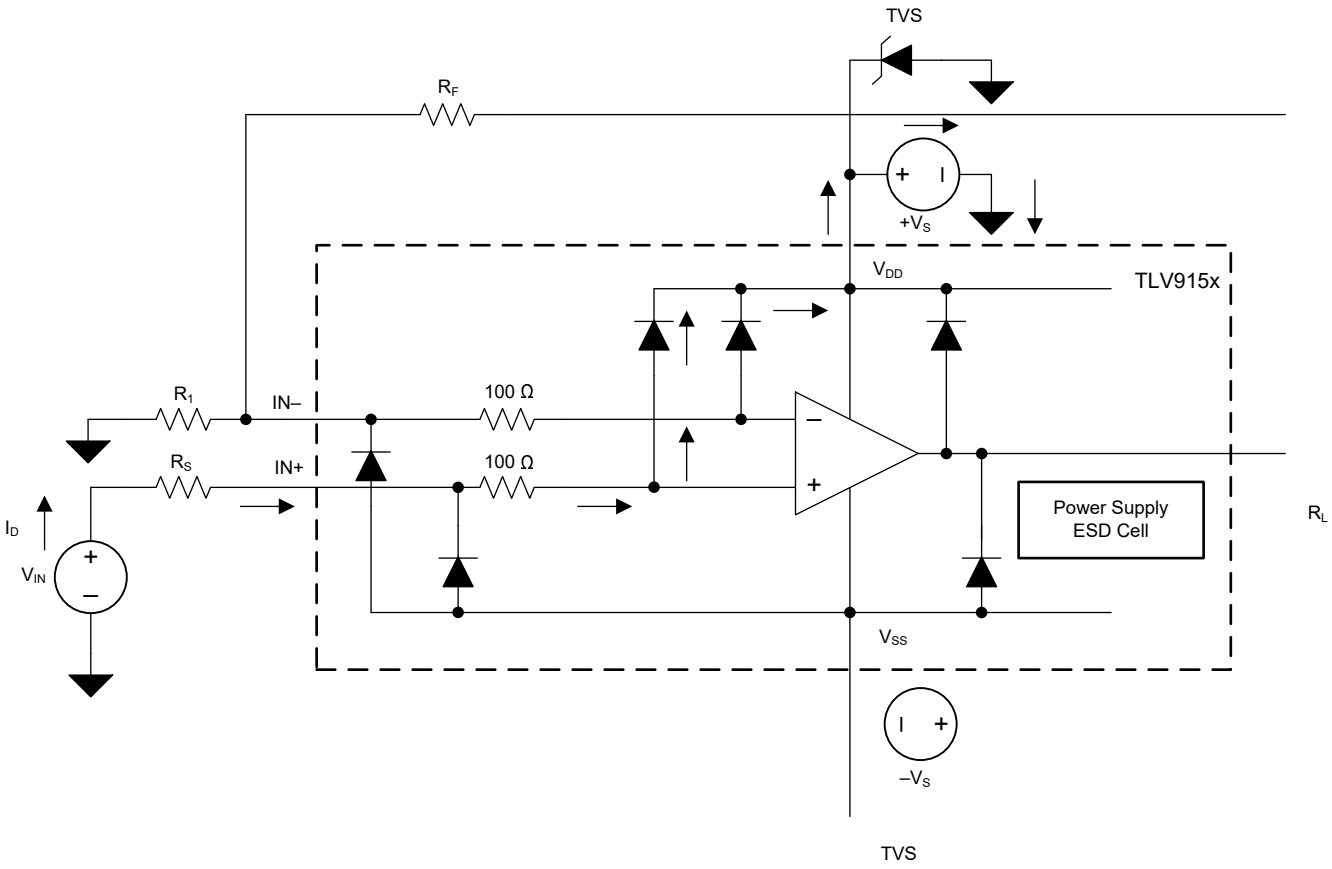

Figure 6-8. Equivalent Internal ESD Circuitry Relative to a Typical Circuit Application

An ESD event is very short in duration and very high voltage (for example; 1 kV, 100 ns), whereas an EOS event is long duration and lower voltage (for example; 50 V, 100 ms). The ESD diodes are designed for out-of-circuit ESD protection (that is, during assembly, test, and storage of the device before being soldered to the PCB). During an ESD event, the ESD signal is passed through the ESD steering diodes to an absorption circuit (labeled ESD power-supply circuit). The ESD absorption circuit clamps the supplies to a safe level.

Although this behavior is necessary for out-of-circuit protection, excessive current and damage is caused if activated in-circuit. A transient voltage suppressors (TVS) can be used to prevent against damage caused by turning on the ESD absorption circuit during an in-circuit ESD event. Using the appropriate current limiting resistors and TVS diodes allows for the use of device ESD diodes to protect against EOS events.

Copyright © 2024 Texas Instruments Incorporated

6.3.7 Overload Recovery

Overload recovery is defined as the time required for the op amp output to recover from a saturated state to a linear state. The output devices of the op amp enter a saturation region when the output voltage exceeds the rated operating voltage, either due to the high input voltage or the high gain. After the device enters the saturation region, the charge carriers in the output devices require time to return back to the linear state. After the charge carriers return back to the linear state, the device begins to slew at the specified slew rate. Thus, the propagation delay in case of an overload condition is the sum of the overload recovery time and the slew time. The overload recovery time for the TLV915x-Q1 is approximately 400 ns.

6.3.8 Typical Specifications and Distributions

Designers often have questions about a typical specification of an amplifier to design a more robust circuit. Due to natural variation in process technology and manufacturing procedures, every specification of an amplifier will exhibit some amount of deviation from the ideal value, like an amplifier's input offset voltage. These deviations often follow *Gaussian* (*bell curve*), or *normal* distributions, and circuit designers can leverage this information to guardband their system, even when there is not a minimum or maximum specification in Section 5.7.

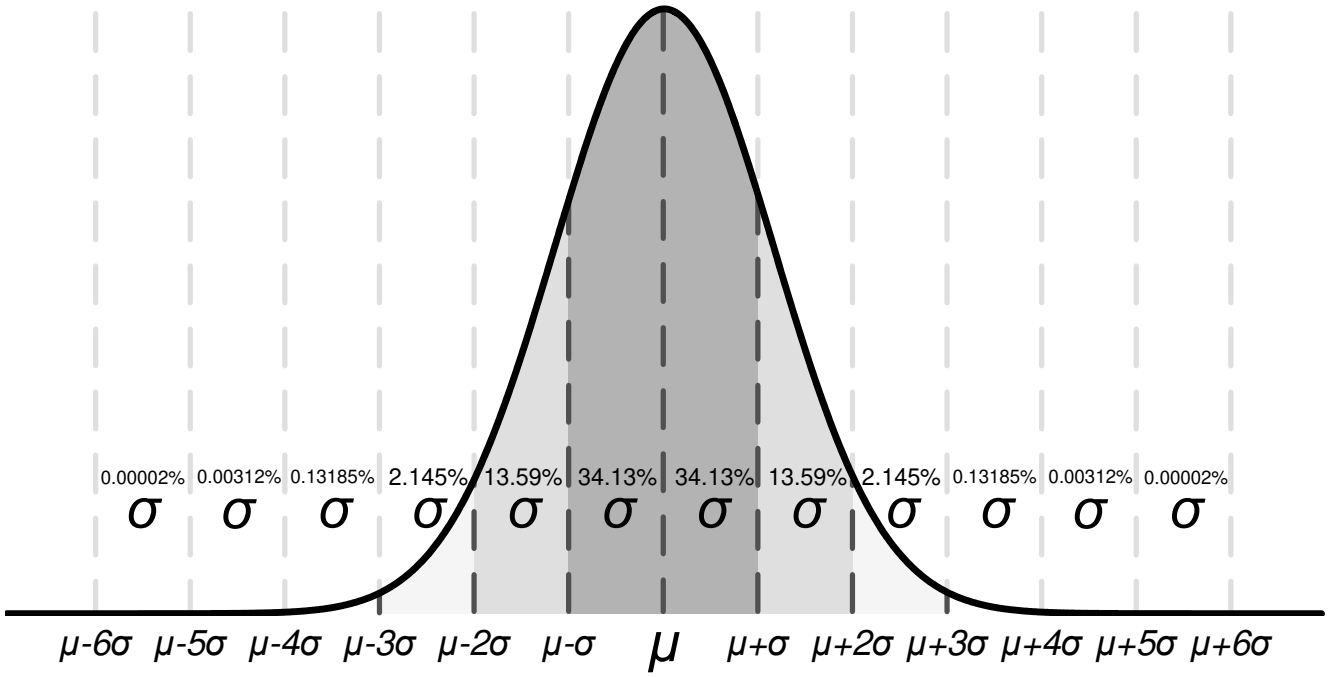

Figure 6-9. Ideal Gaussian Distribution

Figure 6-9 shows an example distribution, where μ, or *mu*, is the mean of the distribution, and where σ, or *sigma*, is the standard deviation of a system. For a specification that exhibits this kind of distribution, approximately two-thirds (68.26%) of all units can be expected to have a value within one standard deviation, or one sigma, of the mean (from $\mu - \sigma$ to $\mu + \sigma$).

Depending on the specification, values listed in the *typical* column of Section 5.7 are represented in different ways. As a general rule, if a specification naturally has a nonzero mean (for example, like gain bandwidth), then the typical value is equal to the mean (μ). However, if a specification naturally has a mean near zero (like input offset voltage), then the typical value is equal to the mean plus one standard deviation (μ + σ) to most accurately represent the typical value.

Copyright © 2024 Texas Instruments Incorporated

This chart can be used to calculate approximate probability of a specification in a unit; for example, for TLV915x-Q1, the typical input voltage offset is 125 µV, so 68.2% of all TLV915x-Q1 devices are expected to have an offset from –125 µV to 125 µV. At 4 σ (±500 µV), 99.9937% of the distribution has an offset voltage less than ±500 µV, which means 0.0063% of the population is outside of these limits, which corresponds to about 1 in 15,873 units.

Specifications with a value in the minimum or maximum column are assured by TI, and units outside these limits will be removed from production material. For example, the TLV915x-Q1 family has a maximum offset voltage of 675 µV at 25°C, and even though this corresponds to about 5 σ (≈1 in 1.7 million units), which is extremely unlikely, TI assures that any unit with larger offset than 895 µV will be removed from production material.

For specifications with no value in the minimum or maximum column, consider selecting a sigma value of sufficient guardband for the application, and design worst-case conditions using this value. For example, the 6-σ value corresponds to about 1 in 500 million units, which is an extremely unlikely chance, and could be an option as a wide guardband to design a system around. In this case, the TLV915x-Q1 family does not have a maximum or minimum for offset voltage drift, but based on Figure 5-2 and the typical value of 0.3 µV/°C in Section 5.7, it can be calculated that the 6-σ value for offset voltage drift is about 1.8 µV/°C. When designing for worst-case system conditions, this value can be used to estimate the worst possible offset across temperature without having an actual minimum or maximum value.

However, process variation and adjustments over time can shift typical means and standard deviations, and unless there is a value in the minimum or maximum specification column, TI cannot assure the performance of a device. This information should be used only to estimate the performance of a device.

6.3.9 Shutdown

The TLV915xS-Q1 devices feature one or more shutdown pins (SHDN) that disable the op amp, placing the amplifier into a low-power standby mode. In this mode, the op amp typically consumes about 30 µA. The SHDN pins are active high, meaning that shutdown mode is enabled when the input to the SHDN pin is a valid logic high.

The SHDN pins are referenced to the negative supply rail of the op amp. The threshold of the shutdown feature lies around 800 mV (typical) and does not change with respect to the supply voltage. Hysteresis has been included in the switching threshold to provide smooth switching characteristics. For proper shutdown behavior, the SHDN pins must be driven with valid logic signals. A valid logic low is defined as a voltage between V– and V– + 0.2 V. A valid logic high is defined as a voltage between V– + 1.1 V and V+. The shutdown pin circuitry includes a pulldown resistor, which inherently pulls the voltage of the pin to the negative supply rail if not driven. Thus, to enable the amplifier, the SHDN pins must either be left floating or driven to a valid logic low. To disable the amplifier, the SHDN pins must be driven to a valid logic high. The maximum voltage allowed at the SHDN pins is V+. Exceeding this voltage level can damage the device.

The SHDN pins are high-impedance CMOS inputs. Channels of single and dual op amp packages are independently controlled, and channels of quad op amp packages are controlled in pairs. For battery-operated applications, this feature can be used to greatly reduce the average current and extend battery life. The typical enable time out of shutdown is 8 µs; disable time is 3 µs. When disabled, the output assumes a high-impedance state. This architecture allows the TLV915xS-Q1 family to operate as a gated amplifier, multiplexer, or programmable-gain amplifier. Shutdown time (t_{OFF}) depends on loading conditions and increases as load resistance increases. To keep shutdown (disable) within a specific shutdown time, the specified 10-kΩ load to midsupply (V_S / 2) is required. If using the TLV915xS-Q1 without a load, the resulting turnoff time significantly increases.

6.4 Device Functional Modes

The TLV915x-Q1 has a single functional mode and is operational when the power-supply voltage is greater than 2.7 V (±1.35 V). The maximum power supply voltage for the TLV915x-Q1 is 16 V (±8 V).

The TLV915xS-Q1 devices feature a shutdown pin, which can be used to place the op amp into a low-power mode. See Section 6.3.9 for more information.

Copyright © 2024 Texas Instruments Incorporated

7 Application and Implementation

Note

Information in the following applications sections is not part of the TI component specification, and TI does not warrant its accuracy or completeness. TI's customers are responsible for determining suitability of components for their purposes. Customers should validate and test their design implementation to confirm system functionality.

7.1 Application Information

The TLV915x-Q1 family offers excellent DC precision and DC performance. These devices operate up to 16-V supply rails and offer true rail-to-rail input/output, low offset voltage and offset voltage drift, as well as 4.5-MHz bandwidth and high output drive. These features make the TLV915x-Q1 a robust, high-performance operational amplifier for high-voltage industrial applications.

7.2 Typical Applications

7.2.1 Low-Side Current Measurement

Figure 7-1 shows the TLV9151-Q1 configured in a low-side current sensing application. For a full analysis of the circuit shown in Figure 7-1 including theory, calculations, simulations, and measured data, see TI Precision Design TIPD129, *0-A to 1-A Single-Supply Low-Side Current-Sensing Solution*.

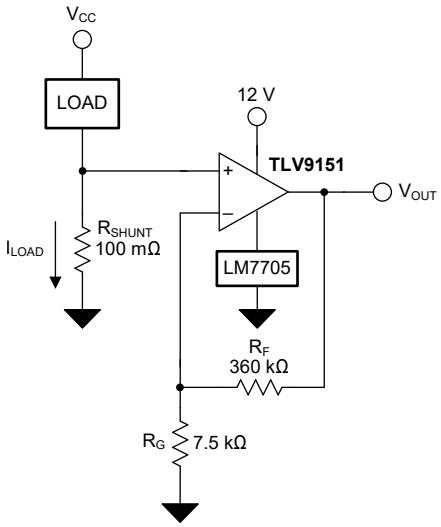

Figure 7-1. TLV9151-Q1 in a Low-Side, Current-Sensing Application

7.2.1.1 Design Requirements

The design requirements for this design are:

- Load current: 0 A to 1 A
- Output voltage: 4.9 V
- Maximum shunt voltage: 100 mV

Copyright © 2024 Texas Instruments Incorporated

7.2.1.2 Detailed Design Procedure

The transfer function of the circuit in Figure 7-1 is given in Equation 1.

$$V_{OUT} = I_{LOAD} \times R_{SHUNT} \times Gain \quad (1)$$

The load current (I_{LOAD}) produces a voltage drop across the shunt resistor (R_{SHUNT}). The load current is set from 0 A to 1 A. To keep the shunt voltage below 100 mV at maximum load current, the largest shunt resistor is defined using Equation 2.

$$R_{SHUNT} = \frac{V_{SHUNT_MAX}}{I_{LOAD_MAX}} = \frac{100\,mV}{1\,A} = 100\,m\Omega \quad (2)$$

Using Equation 2, R_{SHUNT} is calculated to be 100 mΩ. The voltage drop produced by I_{LOAD} and R_{SHUNT} is amplified by the TLV9151-Q1 to produce an output voltage of 0 V to 4.9 V. The gain needed by the TLV9151-Q1 to produce the necessary output voltage is calculated using Equation 3.

$$Gain = \frac{(V_{OUT_MAX} - V_{OUT_MIN})}{(V_{IN_MAX} - V_{IN_MIN})} \quad (3)$$

Using Equation 3, the required gain is calculated to be 49 V/V, which is set with resistors R_F and R_G. Equation 4 is used to size the resistors, R_F and R_G, to set the gain of the TLV9151-Q1 to 49 V/V.

$$Gain = 1 + \frac{(R_F)}{(R_G)} \quad (4)$$

Choosing R_F as 360 kΩ, R_G is calculated to be 7.5 kΩ. R_F and R_G were chosen as 360 kΩ and 7.5 kΩ because they are standard value resistors that create a 49:1 ratio. Other resistors that create a 49:1 ratio can also be used. Figure 7-2 shows the measured transfer function of the circuit shown in Figure 7-1.

7.2.1.3 Application Curves

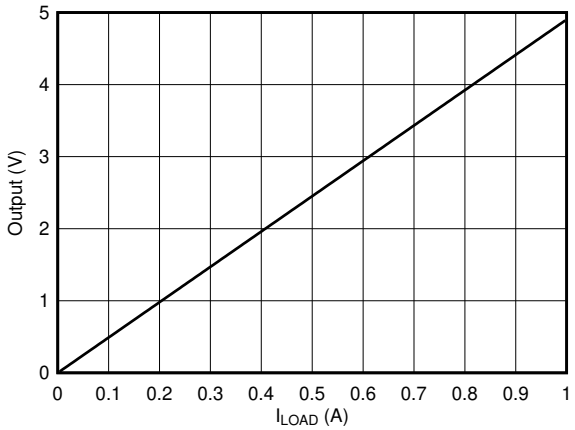

Figure 7-2. Low-Side, Current-Sense, Transfer Function

7.3 Power Supply Recommendations

The TLV915x-Q1 is specified for operation from 2.7 V to 16 V (±1.35 V to ±8 V); many specifications apply from –40°C to 125°C. Parameters that can exhibit significant variance with regard to operating voltage or temperature are presented in Section 5.8.

Copyright © 2024 Texas Instruments Incorporated

CAUTION

Supply voltages larger than 16 V can permanently damage the device; see Section 5.1.

Place 0.1-µF bypass capacitors close to the power-supply pins to reduce errors coupling in from noisy or high-impedance power supplies. For more detailed information on bypass capacitor placement, refer to Section 7.4.

7.4 Layout

7.4.1 Layout Guidelines

For best operational performance of the device, use good PCB layout practices, including:

- Noise can propagate into analog circuitry through the power pins of the circuit as a whole and op amp itself. Bypass capacitors are used to reduce the coupled noise by providing low-impedance power sources local to the analog circuitry.
  - Connect low-ESR, 0.1-µF ceramic bypass capacitors between each supply pin and ground, placed as close to the device as possible. A single bypass capacitor from V+ to ground is applicable for single-supply applications.
- Separate grounding for analog and digital portions of circuitry is one of the simplest and most-effective methods of noise suppression. One or more layers on multilayer PCBs are usually devoted to ground planes. A ground plane helps distribute heat and reduces EMI noise pickup. Make sure to physically separate digital and analog grounds paying attention to the flow of the ground current.
- In order to reduce parasitic coupling, run the input traces as far away from the supply or output traces as possible. If these traces cannot be kept separate, crossing the sensitive trace perpendicular is much better as opposed to in parallel with the noisy trace.
- Place the external components as close to the device as possible. As shown in Figure 7-4, keeping RF and RG close to the inverting input minimizes parasitic capacitance.
- Keep the length of input traces as short as possible. Always remember that the input traces are the most sensitive part of the circuit.
- Consider a driven, low-impedance guard ring around the critical traces. A guard ring can significantly reduce leakage currents from nearby traces that are at different potentials.
- Cleaning the PCB following board assembly is recommended for best performance.
- Any precision integrated circuit may experience performance shifts due to moisture ingress into the plastic package. Following any aqueous PCB cleaning process, baking the PCB assembly is recommended to remove moisture introduced into the device packaging during the cleaning process. A low temperature, post cleaning bake at 85°C for 30 minutes is sufficient for most circumstances.

Copyright © 2024 Texas Instruments Incorporated

7.4.2 Layout Example

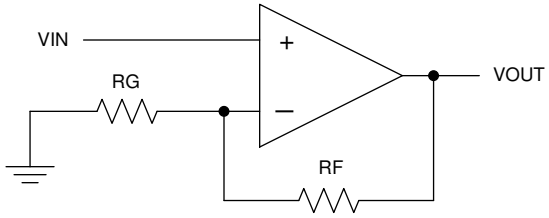

Figure 7-3. Schematic Representation

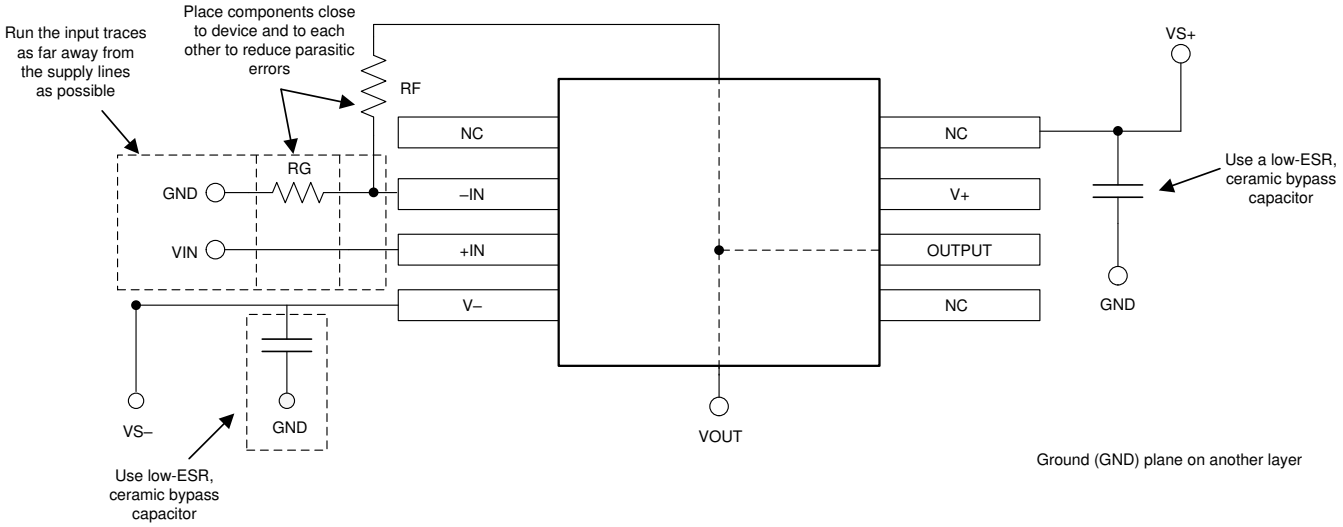

Figure 7-4. Operational Amplifier Board Layout for Noninverting Configuration

8 Device and Documentation Support

8.1 Device Support

8.1.1 Development Support

8.1.1.1 TINA-TI™ (Free Software Download)

TINA™ is a simple, powerful, and easy-to-use circuit simulation program based on a SPICE engine. TINA-TI is a free, fully-functional version of the TINA software, preloaded with a library of macro models in addition to a range of both passive and active models. TINA-TI provides all the conventional dc, transient, and frequency domain analysis of SPICE, as well as additional design capabilities.

Available as a free download from the Analog eLab Design Center, TINA-TI offers extensive post-processing capability that allows users to format results in a variety of ways. Virtual instruments offer the ability to select input waveforms and probe circuit nodes, voltages, and waveforms, creating a dynamic quick-start tool.

Note

These files require that either the TINA software (from DesignSoft™) or TINA-TI software be installed. Download the free TINA-TI software from the TINA-TI folder.

8.1.1.2 TI Precision Designs

The TLV915x-Q1 is featured in several TI Precision Designs, available online at http://www.ti.com/ww/en/analog/precision-designs/. TI Precision Designs are analog solutions created by TI's precision analog applications experts and offer the theory of operation, component selection, simulation, complete PCB schematic and layout, bill of materials, and measured performance of many useful circuits.

8.2 Documentation Support

8.2.1 Related Documentation

For related documentation, see the following:

- Texas Instruments, *Analog Engineer's Circuit Cookbook: Amplifiers* e-book
- Texas Instruments, *AN31 amplifier circuit collection* application note
- Texas Instruments, *0-A to 1-A Single-Supply Low-Side Current-Sensing Solution* TI Precision Design
- Texas Instruments, *The EMI Rejection Ratio of Operational Amplifiers* application note
- Texas Instruments, *Op Amps With Complementary-Pair Input Stages* analog design journal

8.3 Receiving Notification of Documentation Updates

To receive notification of documentation updates, navigate to the device product folder on ti.com. Click on *Notifications* to register and receive a weekly digest of any product information that has changed. For change details, review the revision history included in any revised document.

8.4 Support Resources

TI E2E™ support forums are an engineer's go-to source for fast, verified answers and design help — straight from the experts. Search existing answers or ask your own question to get the quick design help you need.

Linked content is provided "AS IS" by the respective contributors. They do not constitute TI specifications and do not necessarily reflect TI's views; see TI's Terms of Use.

Copyright © 2024 Texas Instruments Incorporated

Trademarks

TINA-TI™ is a trademark of Texas Instruments, Inc and DesignSoft, Inc.
TINA™ and DesignSoft™ are trademarks of DesignSoft, Inc.
TI E2E™ is a trademark of Texas Instruments.
Bluetooth® is a registered trademark of Bluetooth SIG, Inc.
All trademarks are the property of their respective owners.

8.5 Electrostatic Discharge Caution



This integrated circuit can be damaged by ESD. Texas Instruments recommends that all integrated circuits be handled with appropriate precautions. Failure to observe proper handling and installation procedures can cause damage.

ESD damage can range from subtle performance degradation to complete device failure. Precision integrated circuits may be more susceptible to damage because very small parametric changes could cause the device not to meet its published specifications.

8.6 Glossary

TI Glossary — This glossary lists and explains terms, acronyms, and definitions.

9 Revision History

NOTE: Page numbers for previous revisions may differ from page numbers in the current version.

Changes from Revision F (June 2023) to Revision G (March 2024)	Page
• Added the 6-pin SOT-23 (DBV) and 5-pin SC70 (DCK) packages throughout the data sheet	1
• Added HBM ESD rating for TLV9151SQDBVRQ1	6
• Added the Shutdown performance section to Electrical Characteristic table	8
• Added *Shutdown* section to the *Feature Description*	25

Changes from Revision E (March 2022) to Revision F (June 2023)	Page
• Changed the status of the *(TSSOP, 14)* package from: preview to: active	1

Changes from Revision D (September 2021) to Revision E (March 2022)	Page
• Changed maximum PSRR (2.7 V to 16 V) from ±8µV/V to ±10.6µV/V	8
• Changed minimum CMRR (at 16 V) from 100 dB to 99 dB	8

Changes from Revision C (May 2021) to Revision D (September 2021)	Page
• Deleted preview note from SOIC (14) package in *Device Information* table	1
• Deleted preview note from SOT-23 (14) package in *Device Information* table	1
• Deleted preview note from SOIC (8) package in *Device Information* table	1
• Deleted preview note from SOT-23 (5) package in *Device Information* table	1
• Deleted preview note from SOT-23 (14) Package, in *Pin Configuration and Functions* section	3
• Deleted preview note from SOIC (14) Package, in *Pin Configuration and Functions* section	3
• Deleted preview note from SOIC (8) Package, in *Pin Configuration and Functions* section	3
• Deleted preview note from SOT-23 (5) Package, in *Pin Configuration and Functions* section	3

Changes from Revision B (March 2021) to Revision C (May 2021)	Page
• Deleted preview note from TSSOP (14) package in *Device Information* table	1
• Deleted preview note from TSSOP (14) Package, in *Pin Configuration and Functions* section	3

Copyright © 2024 Texas Instruments Incorporated

- Deleted preview note from PW package in Thermal Information for Quad Channel table. 7

Changes from Revision A (January 2021) to Revision B (March 2021) **Page**

- Changed device status from *Advance Information* to *Production Data* 1

10 Mechanical, Packaging, and Orderable Information

The following pages include mechanical, packaging, and orderable information. This information is the most current data available for the designated devices. This data is subject to change without notice and revision of this document. For browser-based versions of this data sheet, refer to the left-hand navigation.

Copyright © 2024 Texas Instruments Incorporated

PACKAGING INFORMATION

Orderable Device	Status (1)	Package Type	Package Drawing	Pins	Package Qty	Eco Plan (2)	Lead finish/ Ball material (6)	MSL Peak Temp (3)	Op Temp (°C)	Device Marking (4/5)	Samples
TLV9151QDBVRQ1	ACTIVE	SOT-23	DBV	5	3000	RoHS & Green	NIPDAU	Level-1-260C-UNLIM	-40 to 125	2JKF	Samples
TLV9151QDCKRQ1	ACTIVE	SC70	DCK	5	3000	RoHS & Green	NIPDAU	Level-1-260C-UNLIM	-40 to 125	1MT	Samples
TLV9151SQDBVRQ1	ACTIVE	SOT-23	DBV	6	3000	RoHS & Green	SN	Level-1-260C-UNLIM	-40 to 125	3BIH	Samples
TLV9152QDGKRQ1	ACTIVE	VSSOP	DGK	8	2500	RoHS & Green	NIPDAU	Level-1-260C-UNLIM	-40 to 125	27XT	Samples
TLV9152QDRQ1	ACTIVE	SOIC	D	8	3000	RoHS & Green	NIPDAU	Level-1-260C-UNLIM	-40 to 125	T9152Q	Samples
TLV9152QPWRQ1	ACTIVE	TSSOP	PW	8	3000	RoHS & Green	NIPDAU	Level-1-260C-UNLIM	-40 to 125	TL9152	Samples
TLV9154QDRQ1	ACTIVE	SOIC	D	14	3000	RoHS & Green	NIPDAU	Level-1-260C-UNLIM	-40 to 125	TL9154QD	Samples
TLV9154QDYYRQ1	ACTIVE	SOT-23-THIN	DYY	14	3000	RoHS & Green	NIPDAU	Level-1-260C-UNLIM	-40 to 125	TLV9154Q	Samples
TLV9154QPWRQ1	ACTIVE	TSSOP	PW	14	3000	RoHS & Green	NIPDAU	Level-1-260C-UNLIM	-40 to 125	T9154Q	Samples

(1) The marketing status values are defined as follows:
ACTIVE: Product device recommended for new designs.
LIFEBUY: TI has announced that the device will be discontinued, and a lifetime-buy period is in effect.
NRND: Not recommended for new designs. Device is in production to support existing customers, but TI does not recommend using this part in a new design.
PREVIEW: Device has been announced but is not in production. Samples may or may not be available.
OBSOLETE: TI has discontinued the production of the device.

(2) **RoHS:** TI defines "RoHS" to mean semiconductor products that are compliant with the current EU RoHS requirements for all 10 RoHS substances, including the requirement that RoHS substance do not exceed 0.1% by weight in homogeneous materials. Where designed to be soldered at high temperatures, "RoHS" products are suitable for use in specified lead-free processes. TI may reference these types of products as "Pb-Free".
RoHS Exempt: TI defines "RoHS Exempt" to mean products that contain lead but are compliant with EU RoHS pursuant to a specific EU RoHS exemption.
Green: TI defines "Green" to mean the content of Chlorine (Cl) and Bromine (Br) based flame retardants meet JS709B low halogen requirements of <=1000ppm threshold. Antimony trioxide based flame retardants must also meet the <=1000ppm threshold requirement.

(3) MSL, Peak Temp. - The Moisture Sensitivity Level rating according to the JEDEC industry standard classifications, and peak solder temperature.

(4) There may be additional marking, which relates to the logo, the lot trace code information, or the environmental category on the device.

(5) Multiple Device Markings will be inside parentheses. Only one Device Marking contained in parentheses and separated by a "~" will appear on a device. If a line is indented then it is a continuation of the previous line and the two combined represent the entire Device Marking for that device.

(6) Lead finish/Ball material - Orderable Devices may have multiple material finish options. Finish options are separated by a vertical ruled line. Lead finish/Ball material values may wrap to two lines if the finish value exceeds the maximum column width.

Important Information and Disclaimer: The information provided on this page represents TI's knowledge and belief as of the date that it is provided. TI bases its knowledge and belief on information provided by third parties, and makes no representation or warranty as to the accuracy of such information. Efforts are underway to better integrate information from third parties. TI has taken and continues to take reasonable steps to provide representative and accurate information but may not have conducted destructive testing or chemical analysis on incoming materials and chemicals. TI and TI suppliers consider certain information to be proprietary, and thus CAS numbers and other limited information may not be available for release.

In no event shall TI's liability arising out of such information exceed the total purchase price of the TI part(s) at issue in this document sold by TI to Customer on an annual basis.

OTHER QUALIFIED VERSIONS OF TLV9151-Q1, TLV9152-Q1, TLV9154-Q1 :

- Catalog : TLV9151, TLV9152, TLV9154

NOTE: Qualified Version Definitions:

- Catalog - TI's standard catalog product

TAPE AND REEL INFORMATION

REEL DIMENSIONS

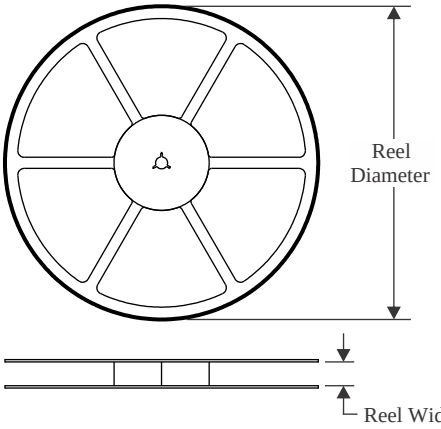

TAPE DIMENSIONS

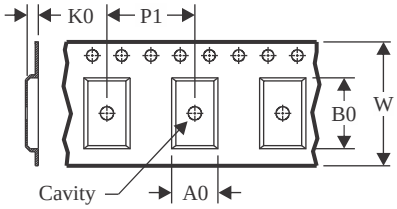

A0	Dimension designed to accommodate the component width
B0	Dimension designed to accommodate the component length
K0	Dimension designed to accommodate the component thickness
W	Overall width of the carrier tape
P1	Pitch between successive cavity centers

QUADRANT ASSIGNMENTS FOR PIN 1 ORIENTATION IN TAPE

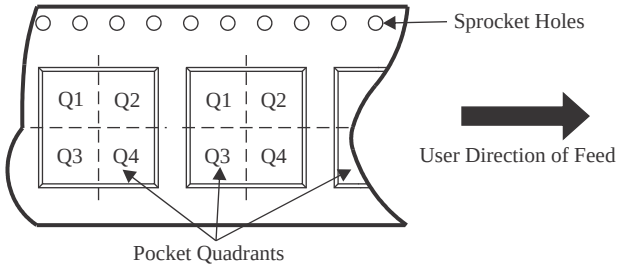

*All dimensions are nominal

Device	Package Type	Package Drawing	Pins	SPQ	Reel Diameter (mm)	Reel Width W1 (mm)	A0 (mm)	B0 (mm)	K0 (mm)	P1 (mm)	W (mm)	Pin1 Quadrant
TLV9151QDBVRQ1	SOT-23	DBV	5	3000	180.0	8.4	3.2	3.2	1.4	4.0	8.0	Q3
TLV9151QDCKRQ1	SC70	DCK	5	3000	178.0	9.0	2.4	2.5	1.2	4.0	8.0	Q3
TLV9151SQDBVRQ1	SOT-23	DBV	6	3000	180.0	8.4	3.2	3.2	1.4	4.0	8.0	Q3
TLV9152QDGKRQ1	VSSOP	DGK	8	2500	330.0	12.4	5.3	3.4	1.4	8.0	12.0	Q1
TLV9152QDRQ1	SOIC	D	8	3000	330.0	12.4	6.4	5.2	2.1	8.0	12.0	Q1
TLV9152QPWRQ1	TSSOP	PW	8	3000	330.0	12.4	7.0	3.6	1.6	8.0	12.0	Q1
TLV9154QDRQ1	SOIC	D	14	3000	330.0	16.4	6.5	9.0	2.1	8.0	16.0	Q1
TLV9154QDYYRQ1	SOT-23-THIN	DYY	14	3000	330.0	12.4	4.8	3.6	1.6	8.0	12.0	Q3
TLV9154QPWRQ1	TSSOP	PW	14	3000	330.0	12.4	6.9	5.6	1.6	8.0	12.0	Q1

TAPE AND REEL BOX DIMENSIONS

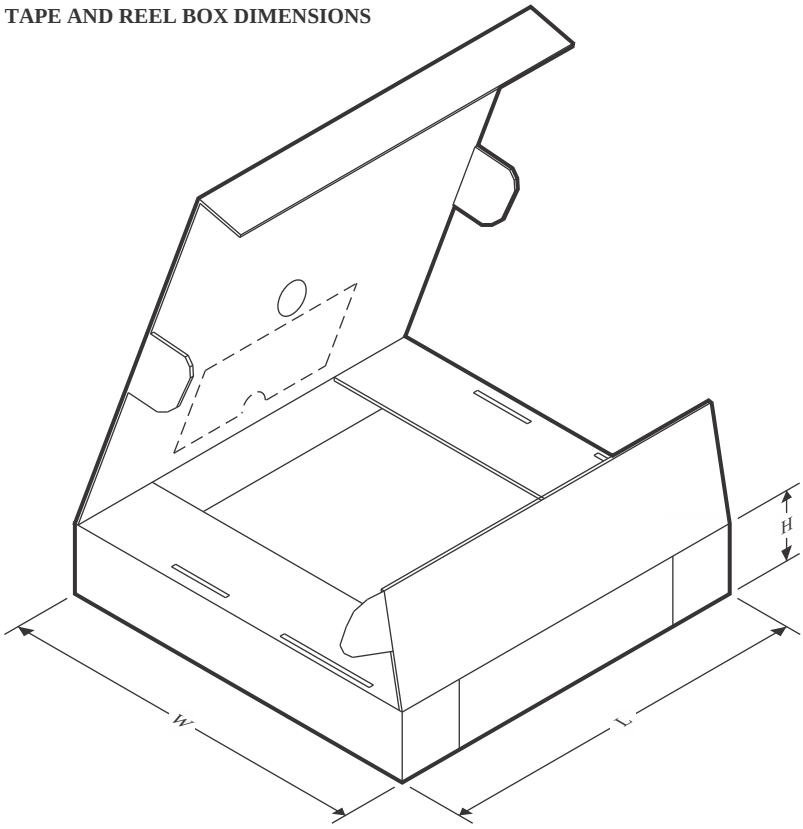

*All dimensions are nominal

Device	Package Type	Package Drawing	Pins	SPQ	Length (mm)	Width (mm)	Height (mm)
TLV9151QDBVRQ1	SOT-23	DBV	5	3000	210.0	185.0	35.0
TLV9151QDCKRQ1	SC70	DCK	5	3000	180.0	180.0	18.0
TLV9151SQDBVRQ1	SOT-23	DBV	6	3000	210.0	185.0	35.0
TLV9152QDGKRQ1	VSSOP	DGK	8	2500	366.0	364.0	50.0
TLV9152QDRQ1	SOIC	D	8	3000	356.0	356.0	35.0
TLV9152QPWRQ1	TSSOP	PW	8	3000	356.0	356.0	35.0
TLV9154QDRQ1	SOIC	D	14	3000	356.0	356.0	35.0
TLV9154QDYYRQ1	SOT-23-THIN	DYY	14	3000	336.6	336.6	31.8
TLV9154QPWRQ1	TSSOP	PW	14	3000	356.0	356.0	35.0

PACKAGE OUTLINE

DGK0008A

VSSOP - 1.1 mm max height

SMALL OUTLINE PACKAGE

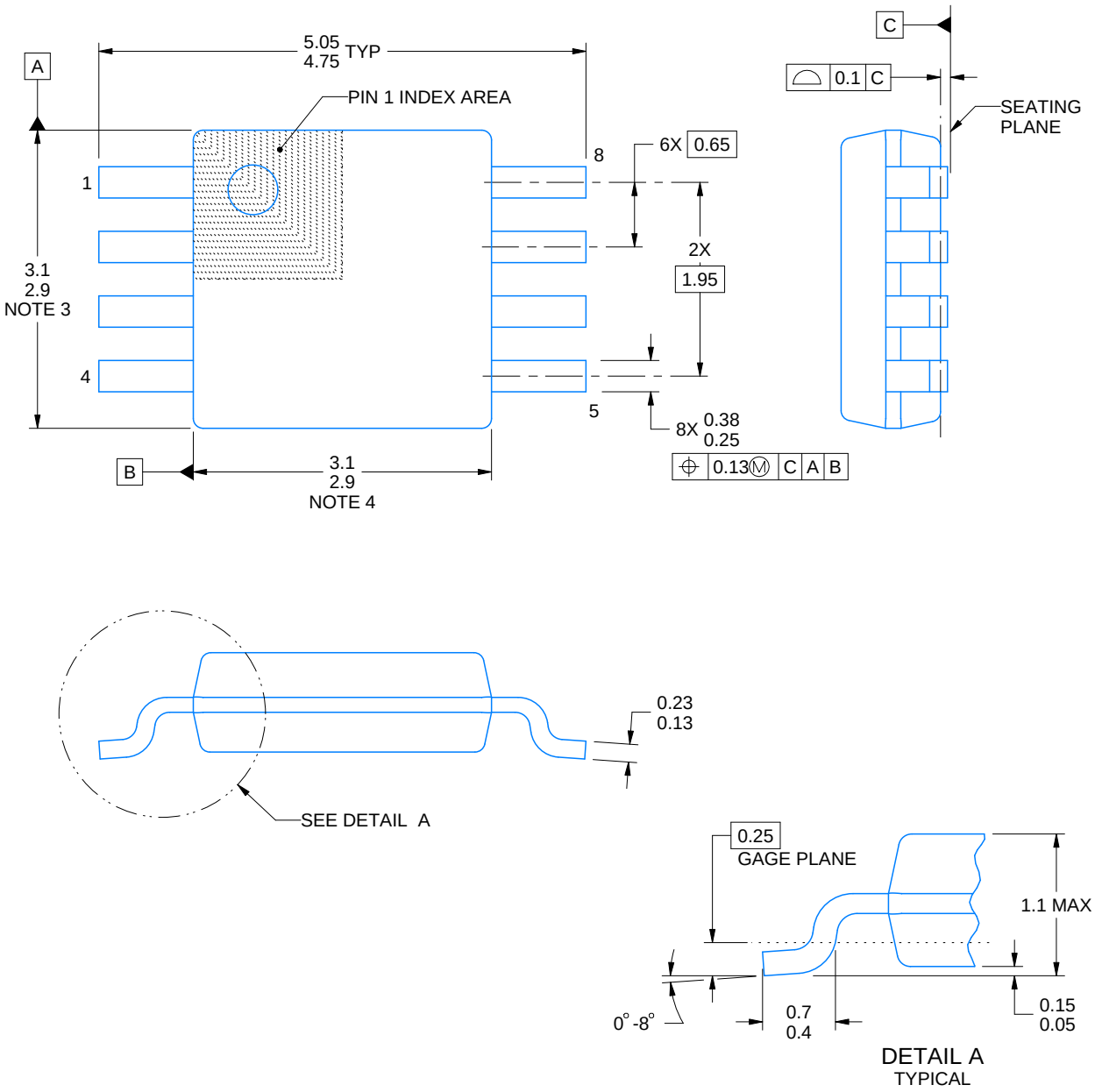

PowerPAD is a trademark of Texas Instruments.

NOTES:

1. All linear dimensions are in millimeters. Any dimensions in parenthesis are for reference only. Dimensioning and tolerancing per ASME Y14.5M.
2. This drawing is subject to change without notice.
3. This dimension does not include mold flash, protrusions, or gate burrs. Mold flash, protrusions, or gate burrs shall not exceed 0.15 mm per side.
4. This dimension does not include interlead flash. Interlead flash shall not exceed 0.25 mm per side.
5. Reference JEDEC registration MO-187.

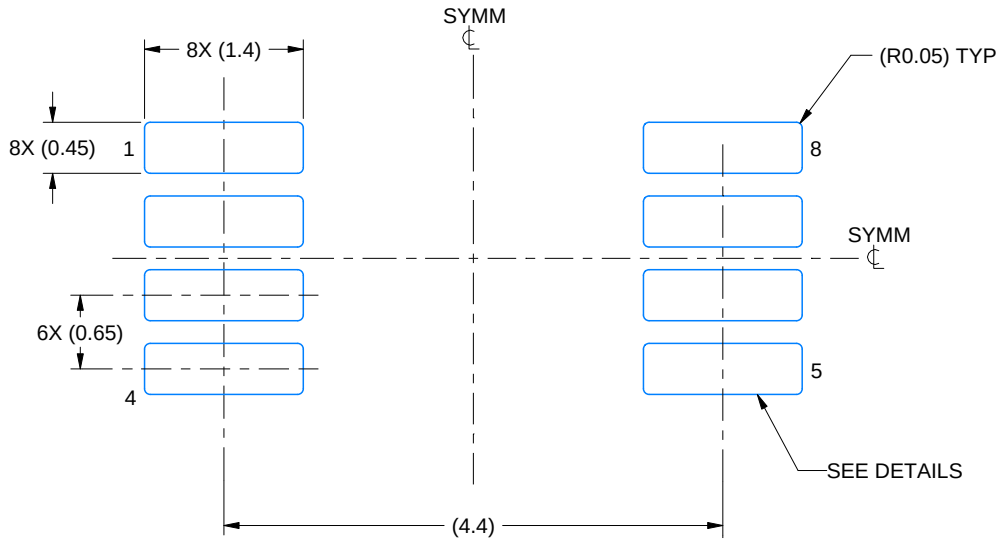

LAND PATTERN EXAMPLE
EXPOSED METAL SHOWN
SCALE: 15X

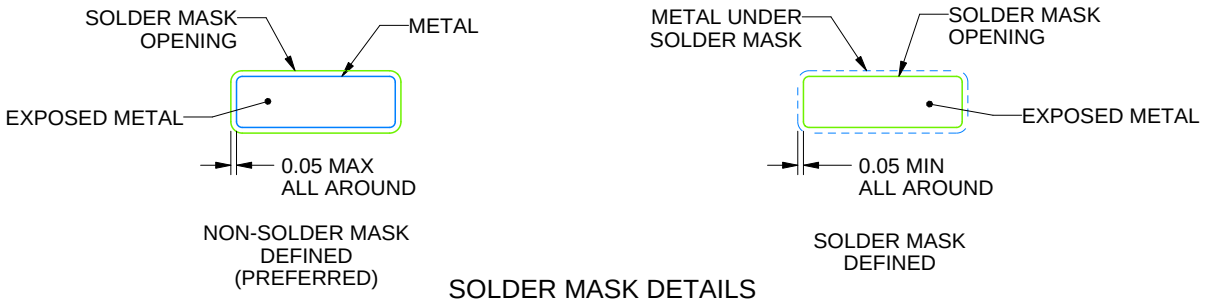

SOLDER MASK DETAILS

4214862/A 04/2023

NOTES: (continued)

6. Publication IPC-7351 may have alternate designs.
7. Solder mask tolerances between and around signal pads can vary based on board fabrication site.
8. Vias are optional depending on application, refer to device data sheet. If any vias are implemented, refer to their locations shown on this view. It is recommended that vias under paste be filled, plugged or tented.
9. Size of metal pad may vary due to creepage requirement.

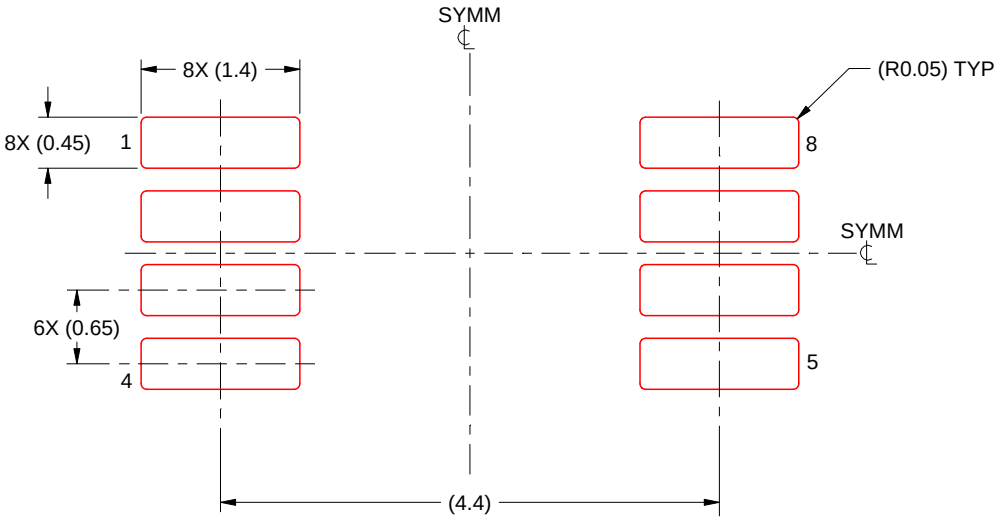

SOLDER PASTE EXAMPLE
SCALE: 15X

4214862/A 04/2023

NOTES: (continued)

11. Laser cutting apertures with trapezoidal walls and rounded corners may offer better paste release. IPC-7525 may have alternate design recommendations.
12. Board assembly site may have different recommendations for stencil design.

PACKAGE OUTLINE

DYY0014A

SOT-23-THIN - 1.1 mm max height

PLASTIC SMALL OUTLINE

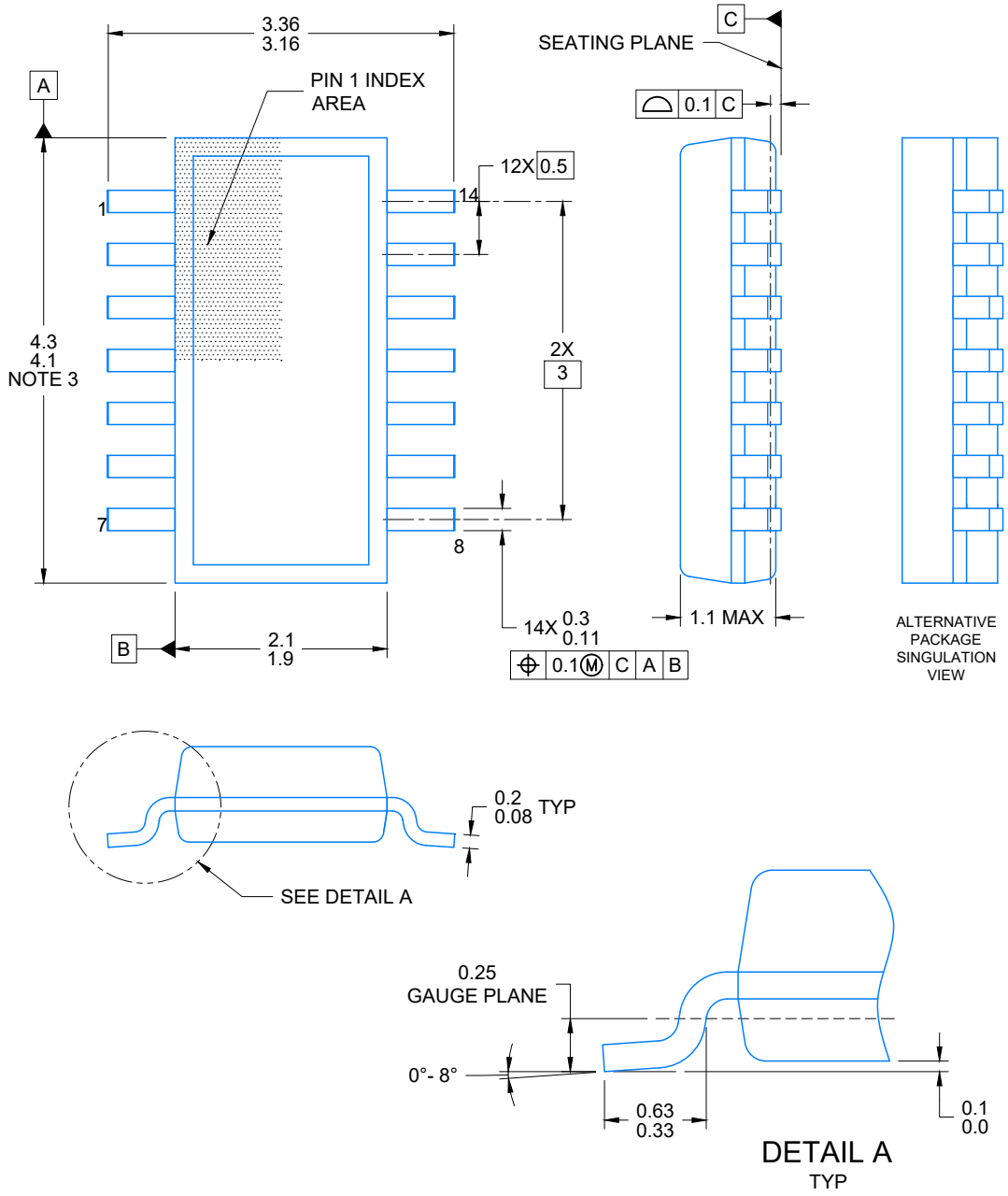

NOTES:

1. All linear dimensions are in millimeters. Any dimensions in parenthesis are for reference only. Dimensioning and tolerancing per ASME Y14.5M.
2. This drawing is subject to change without notice.
3. This dimension does not include mold flash, protrusions, or gate burrs. Mold flash, protrusions, or gate burrs shall not exceed 0.15 per side.
4. This dimension does not include interlead flash. Interlead flash shall not exceed 0.50 per side.
5. Reference JEDEC Registration MO-345, Variation AB

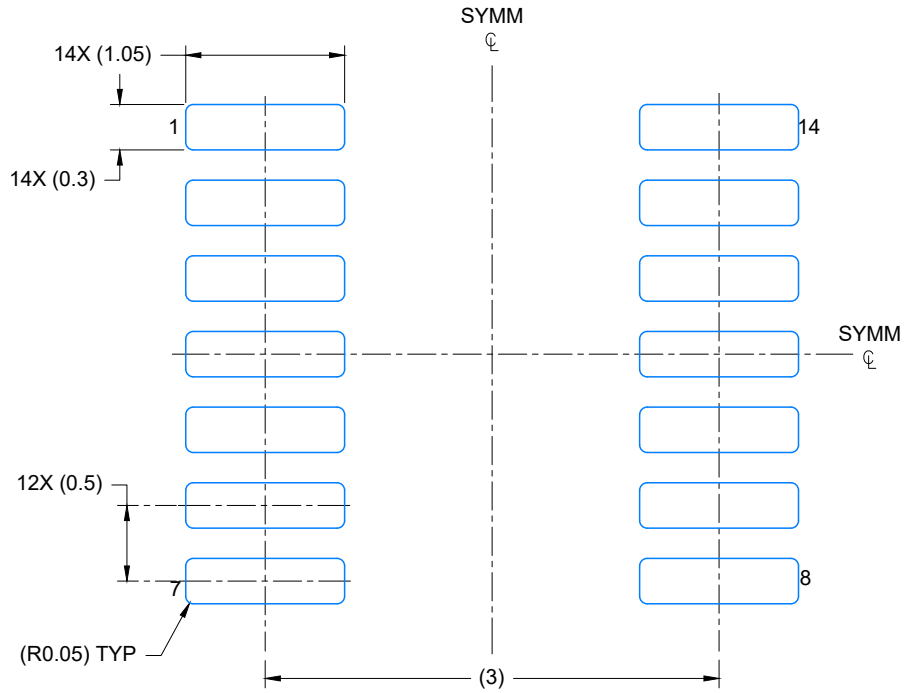

LAND PATTERN EXAMPLE
EXPOSED METAL SHOWN
SCALE: 20X

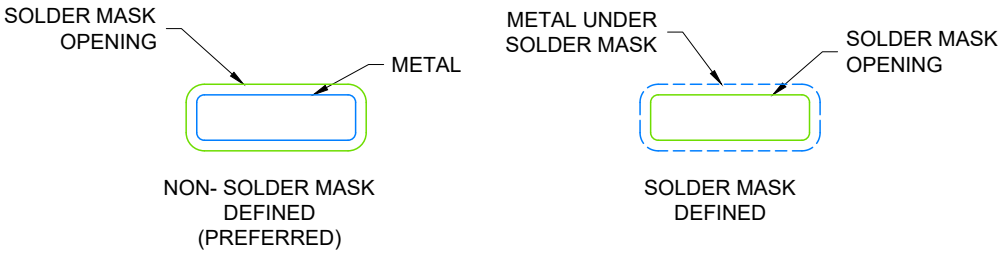

SOLDER MASK DETAILS

4224643/C 04/2024

NOTES: (continued)

6. Publication IPC-7351 may have alternate designs.
7. Solder mask tolerances between and around signal pads can vary based on board fabrication site.

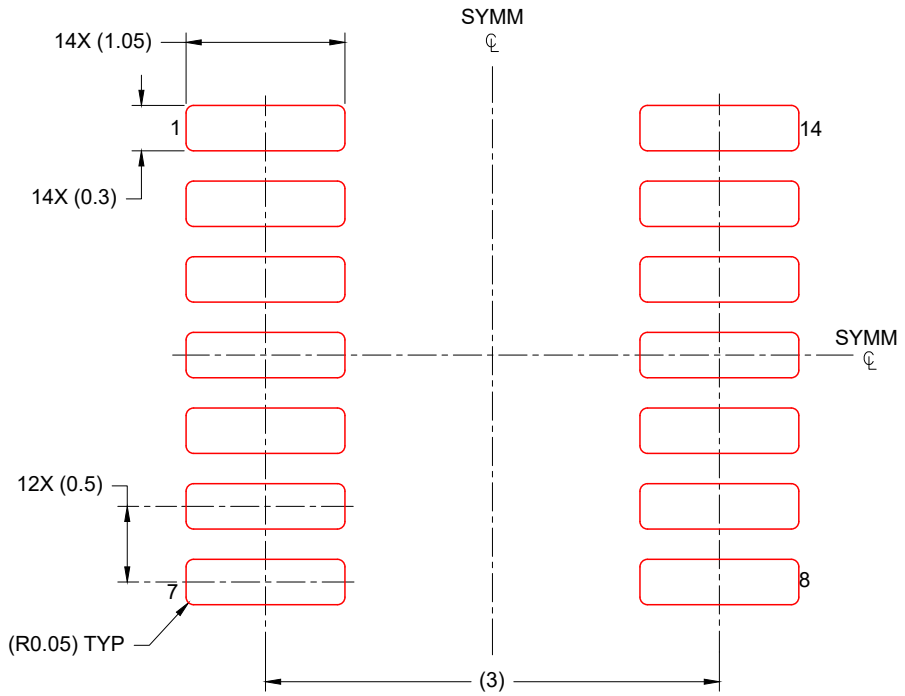

SOLDER PASTE EXAMPLE
BASED ON 0.125 mm THICK STENCIL
SCALE: 20X

4224643/C 04/2024

NOTES: (continued)

8. Laser cutting apertures with trapezoidal walls and rounded corners may offer better paste release. IPC-7525 may have alternate design recommendations.
9. Board assembly site may have different recommendations for stencil design.

PACKAGE OUTLINE

DBV0006A

SOT-23 - 1.45 mm max height

SMALL OUTLINE TRANSISTOR

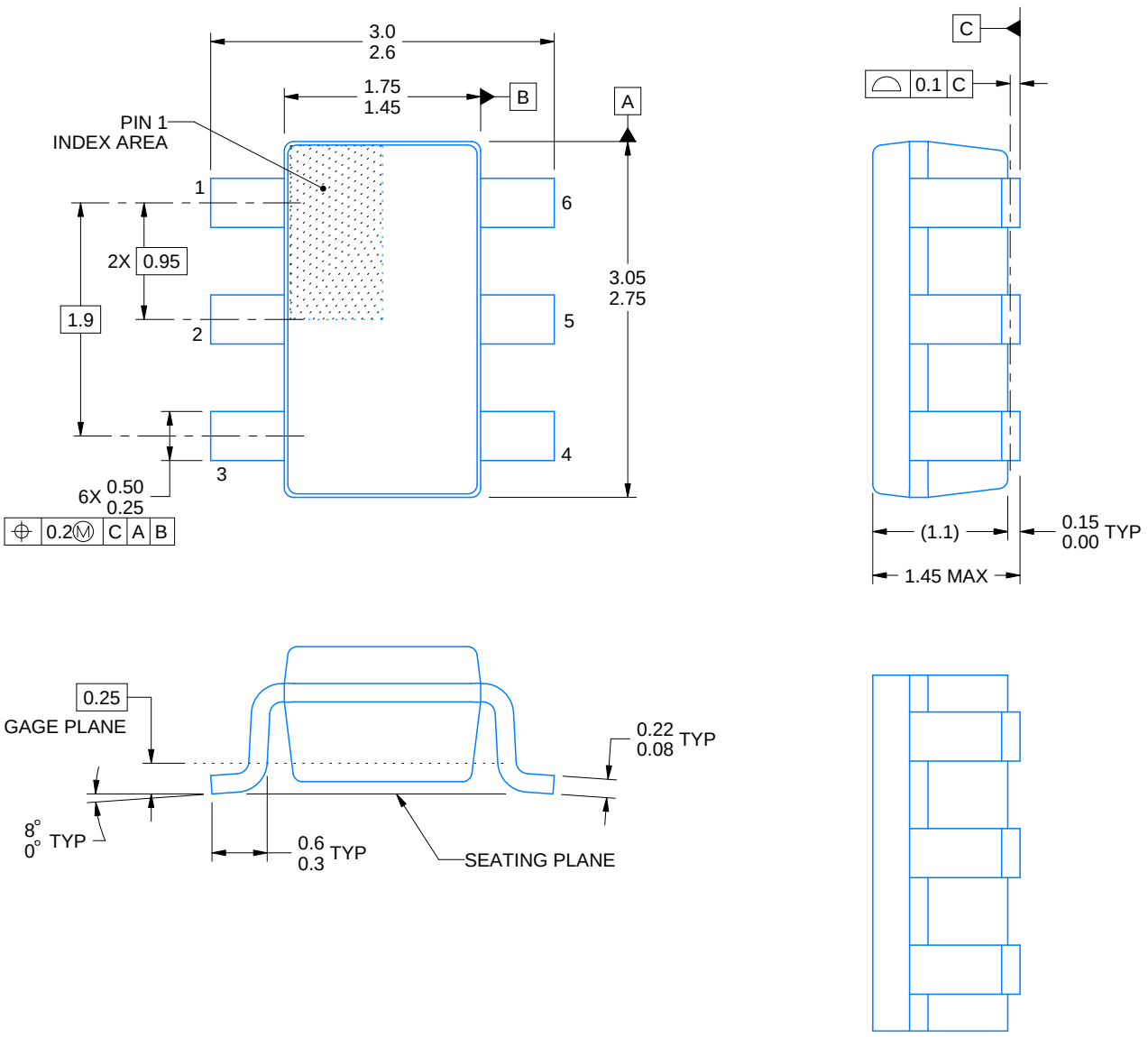

ALTERNATIVE PACKAGE SINGULATION VIEW

4214840/E 02/2024

NOTES:

1. All linear dimensions are in millimeters. Any dimensions in parenthesis are for reference only. Dimensioning and tolerancing per ASME Y14.5M.
2. This drawing is subject to change without notice.
3. Body dimensions do not include mold flash or protrusion. Mold flash and protrusion shall not exceed 0.25 per side.
4. Leads 1,2,3 may be wider than leads 4,5,6 for package orientation.
5. Refernce JEDEC MO-178.

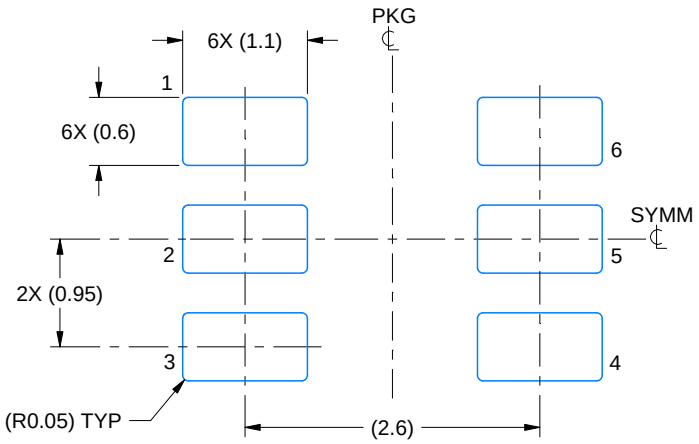

LAND PATTERN EXAMPLE
EXPOSED METAL SHOWN
SCALE:15X

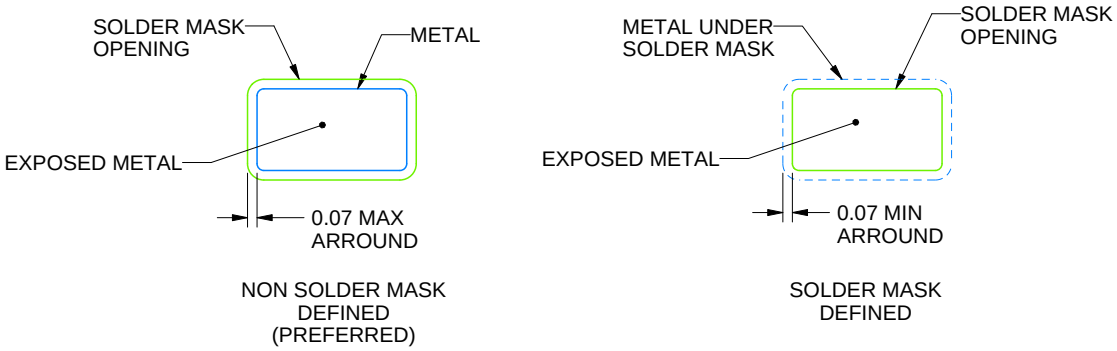

SOLDER MASK DETAILS

4214840/E 02/2024

NOTES: (continued)

6. Publication IPC-7351 may have alternate designs.
7. Solder mask tolerances between and around signal pads can vary based on board fabrication site.

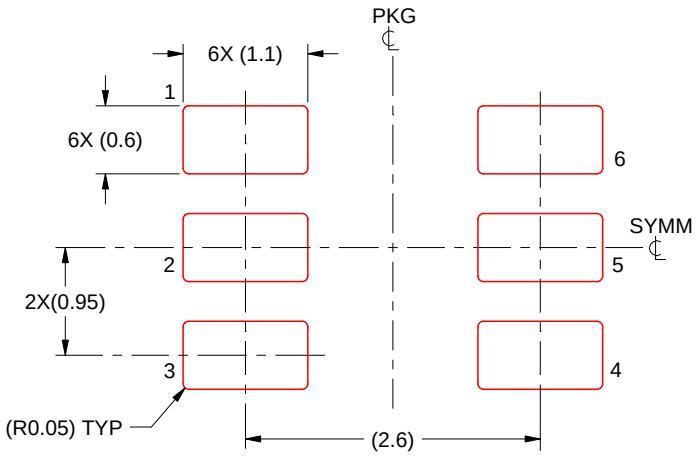

SOLDER PASTE EXAMPLE
BASED ON 0.125 mm THICK STENCIL
SCALE:15X

4214840/E 02/2024

NOTES: (continued)

8. Laser cutting apertures with trapezoidal walls and rounded corners may offer better paste release. IPC-7525 may have alternate design recommendations.
9. Board assembly site may have different recommendations for stencil design.

PACKAGE OUTLINE

DBV0005A

SOT-23 - 1.45 mm max height

SMALL OUTLINE TRANSISTOR

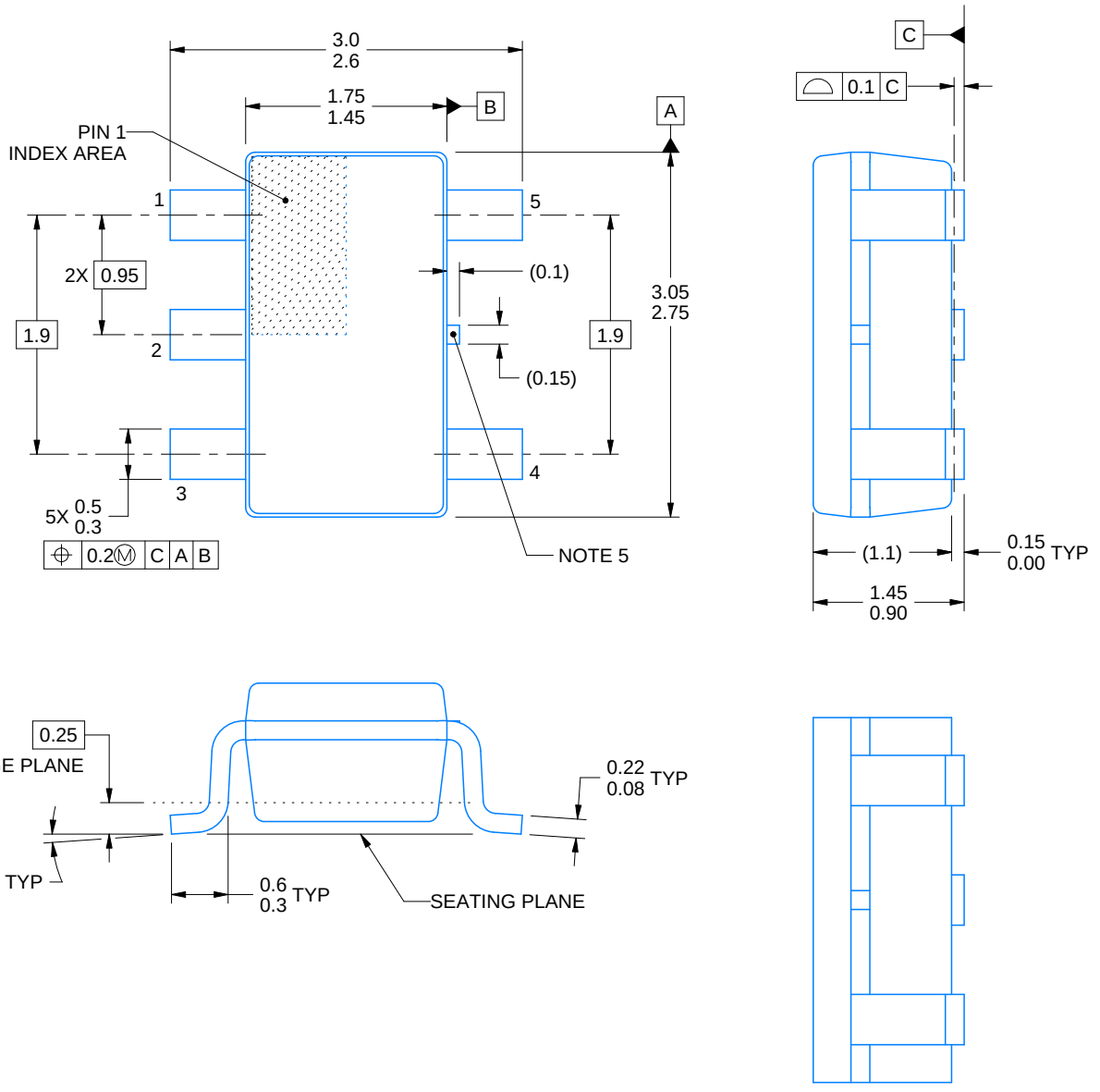

ALTERNATIVE PACKAGE SINGULATION VIEW

4214839/J 02/2024

NOTES:

1. All linear dimensions are in millimeters. Any dimensions in parenthesis are for reference only. Dimensioning and tolerancing per ASME Y14.5M.
2. This drawing is subject to change without notice.
3. Refernce JEDEC MO-178.
4. Body dimensions do not include mold flash, protrusions, or gate burrs. Mold flash, protrusions, or gate burrs shall not exceed 0.25 mm per side.
5. Support pin may differ or may not be present.

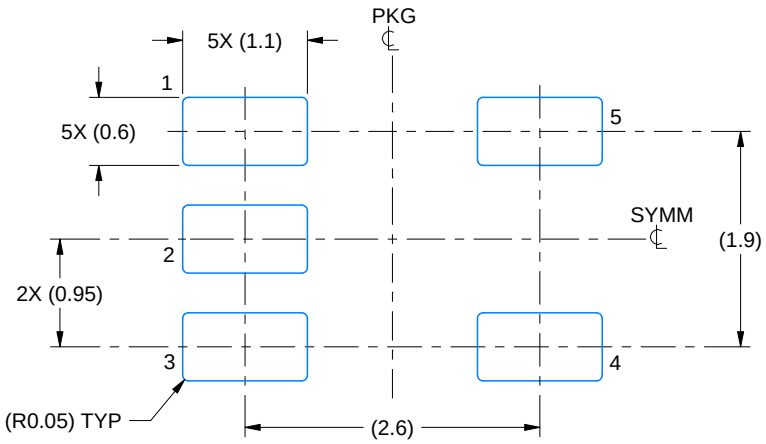

LAND PATTERN EXAMPLE
EXPOSED METAL SHOWN
SCALE:15X

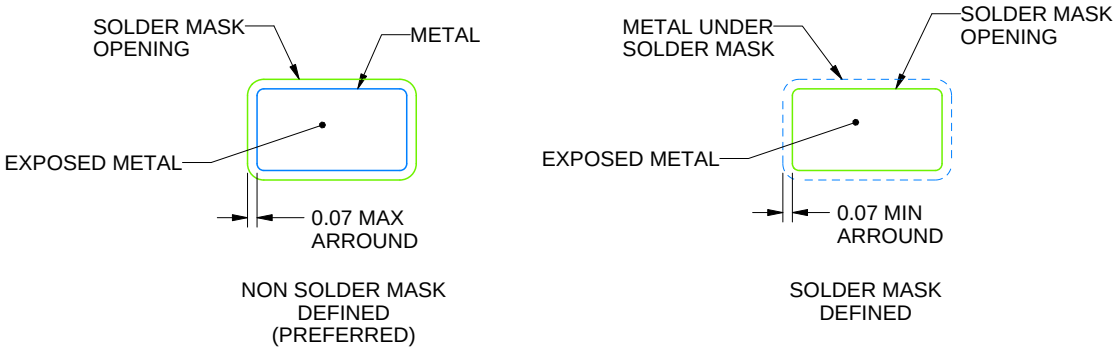

SOLDER MASK DETAILS

4214839/J 02/2024

NOTES: (continued)

6. Publication IPC-7351 may have alternate designs.
7. Solder mask tolerances between and around signal pads can vary based on board fabrication site.

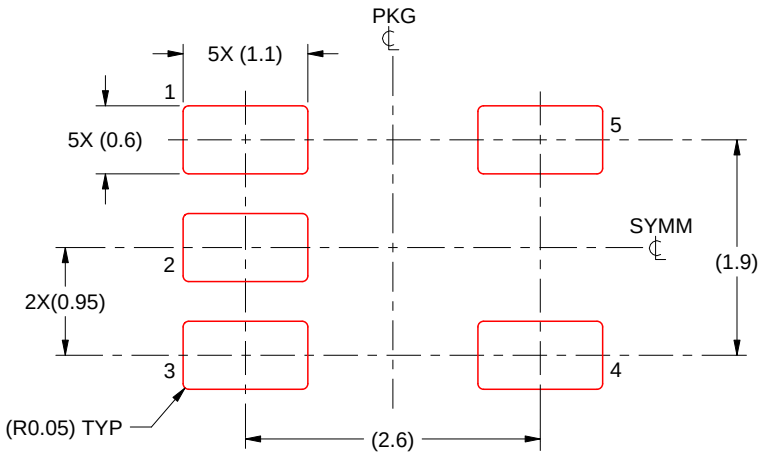

SOLDER PASTE EXAMPLE
BASED ON 0.125 mm THICK STENCIL
SCALE:15X

4214839/J 02/2024

NOTES: (continued)

8. Laser cutting apertures with trapezoidal walls and rounded corners may offer better paste release. IPC-7525 may have alternate design recommendations.
9. Board assembly site may have different recommendations for stencil design.

PACKAGE OUTLINE

DCK0005A

SOT - 1.1 max height

SMALL OUTLINE TRANSISTOR

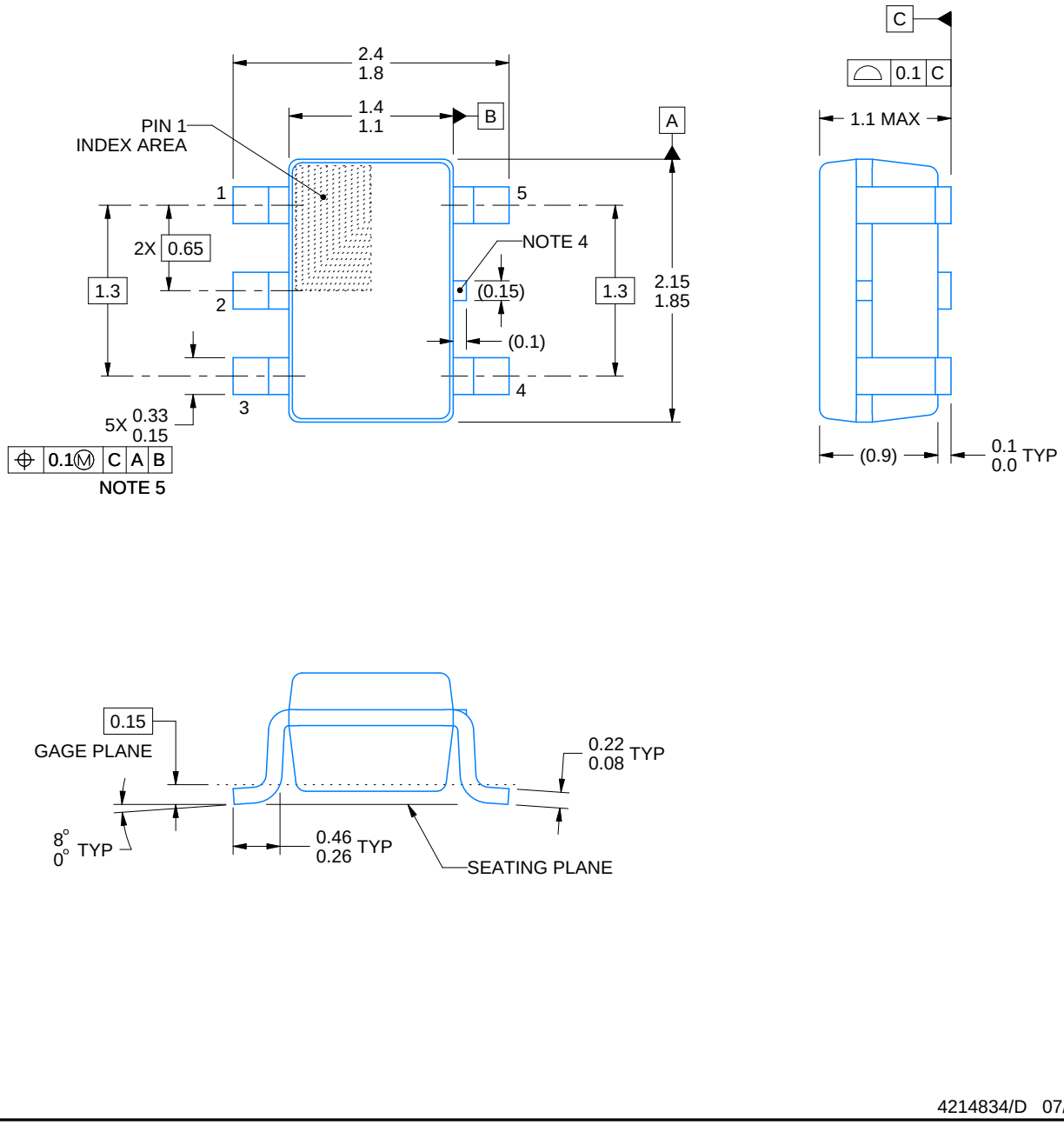

4214834/D 07/2023

NOTES:

1. All linear dimensions are in millimeters. Any dimensions in parenthesis are for reference only. Dimensioning and tolerancing per ASME Y14.5M.
2. This drawing is subject to change without notice.
3. Refernce JEDEC MO-203.
4. Support pin may differ or may not be present.
5. Lead width does not comply with JEDEC.

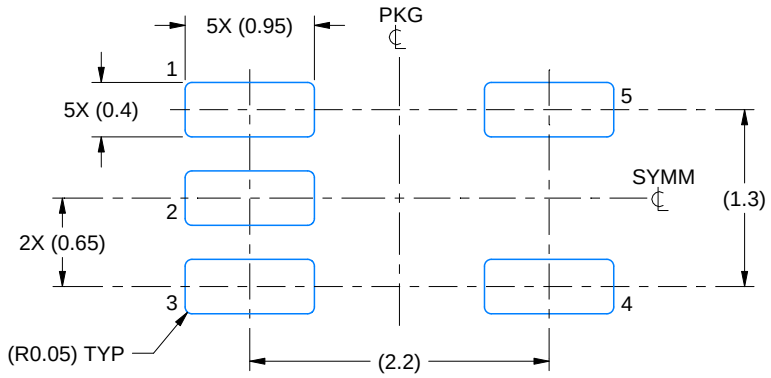

LAND PATTERN EXAMPLE
EXPOSED METAL SHOWN
SCALE:18X

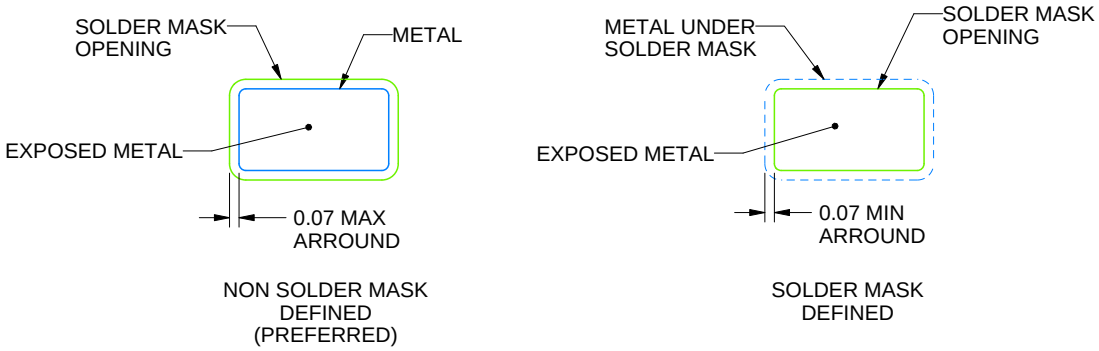

SOLDER MASK DETAILS

4214834/D 07/2023

NOTES: (continued)

6. Publication IPC-7351 may have alternate designs.
7. Solder mask tolerances between and around signal pads can vary based on board fabrication site.

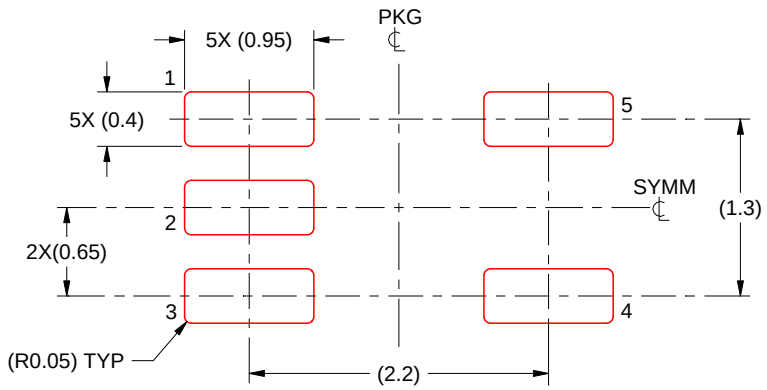

SOLDER PASTE EXAMPLE
BASED ON 0.125 THICK STENCIL
SCALE:18X

4214834/D 07/2023

NOTES: (continued)

8. Laser cutting apertures with trapezoidal walls and rounded corners may offer better paste release. IPC-7525 may have alternate design recommendations.
9. Board assembly site may have different recommendations for stencil design.

D (R–PDSO–G14) PLASTIC SMALL OUTLINE

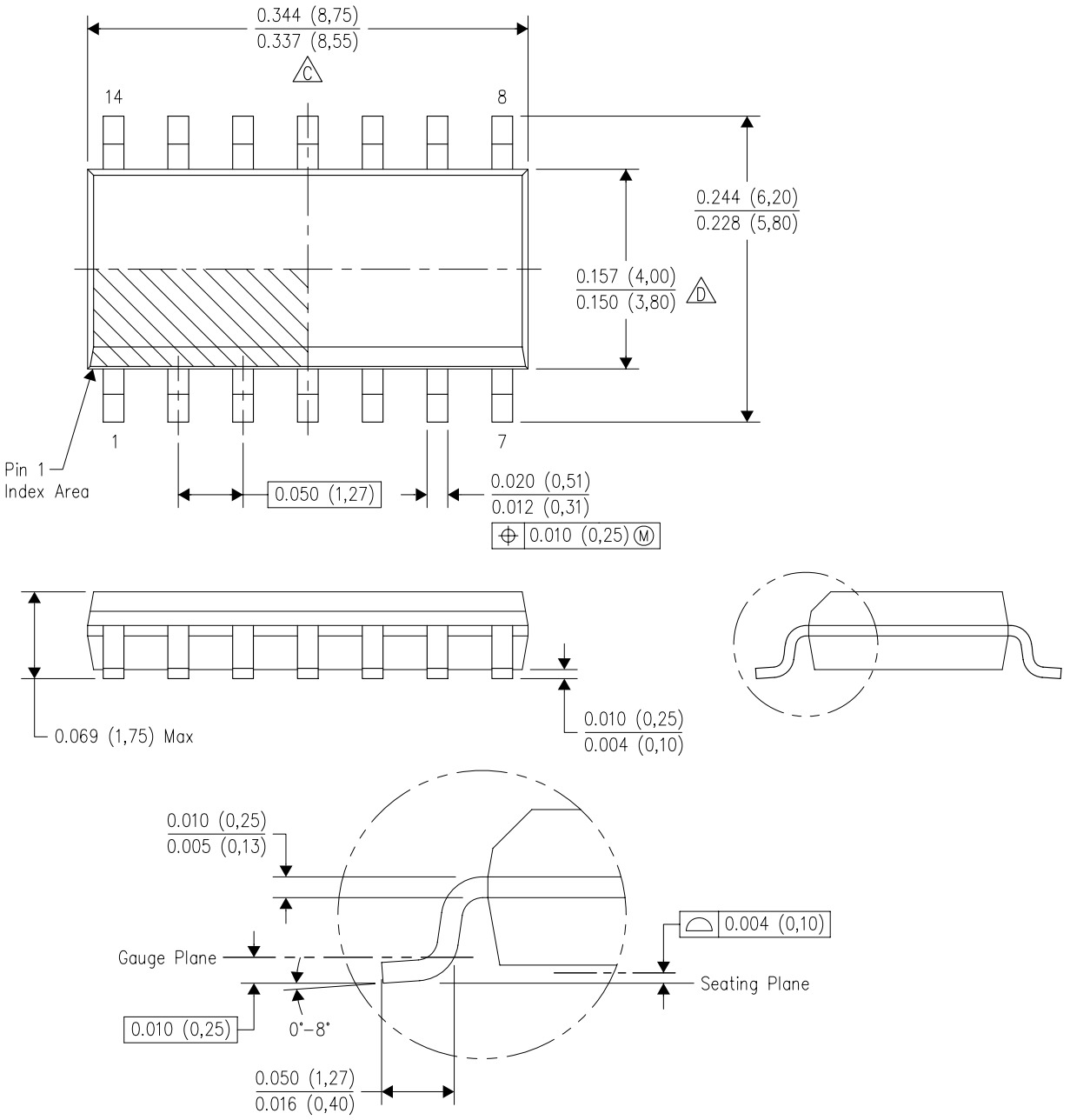

4040047–5/M 06/11

NOTES:
A. All linear dimensions are in inches (millimeters).
B. This drawing is subject to change without notice.
C. Body length does not include mold flash, protrusions, or gate burrs. Mold flash, protrusions, or gate burrs shall not exceed 0.006 (0,15) each side.
D. Body width does not include interlead flash. Interlead flash shall not exceed 0.017 (0,43) each side.
E. Reference JEDEC MS–012 variation AB.

D (R–PDSO–G14) PLASTIC SMALL OUTLINE

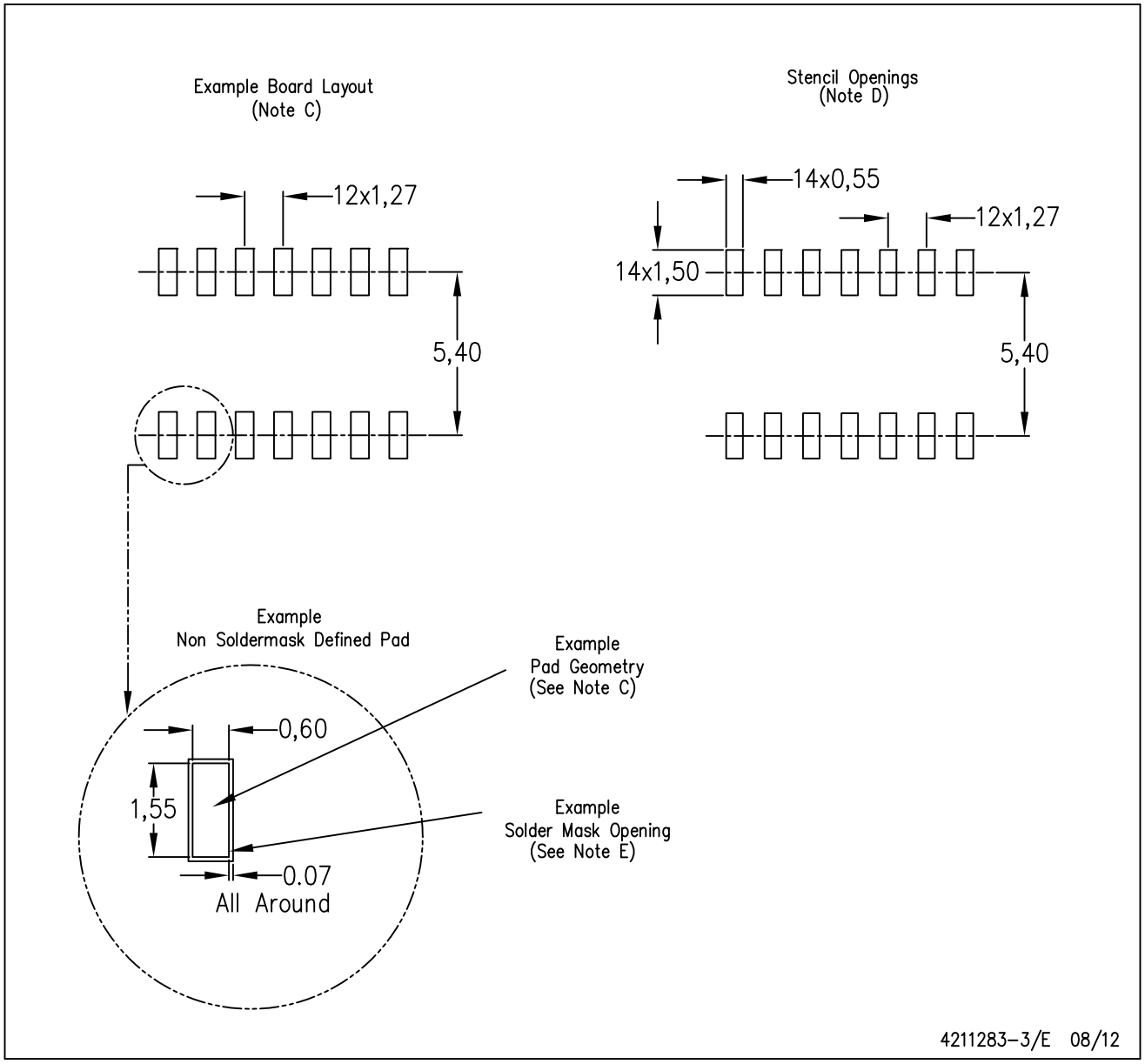

NOTES:
A. All linear dimensions are in millimeters.
B. This drawing is subject to change without notice.
C. Publication IPC–7351 is recommended for alternate designs.
D. Laser cutting apertures with trapezoidal walls and also rounding corners will offer better paste release. Customers should contact their board assembly site for stencil design recommendations. Refer to IPC–7525 for other stencil recommendations.
E. Customers should contact their board fabrication site for solder mask tolerances between and around signal pads.

PW (R–PDSO–G14) PLASTIC SMALL OUTLINE

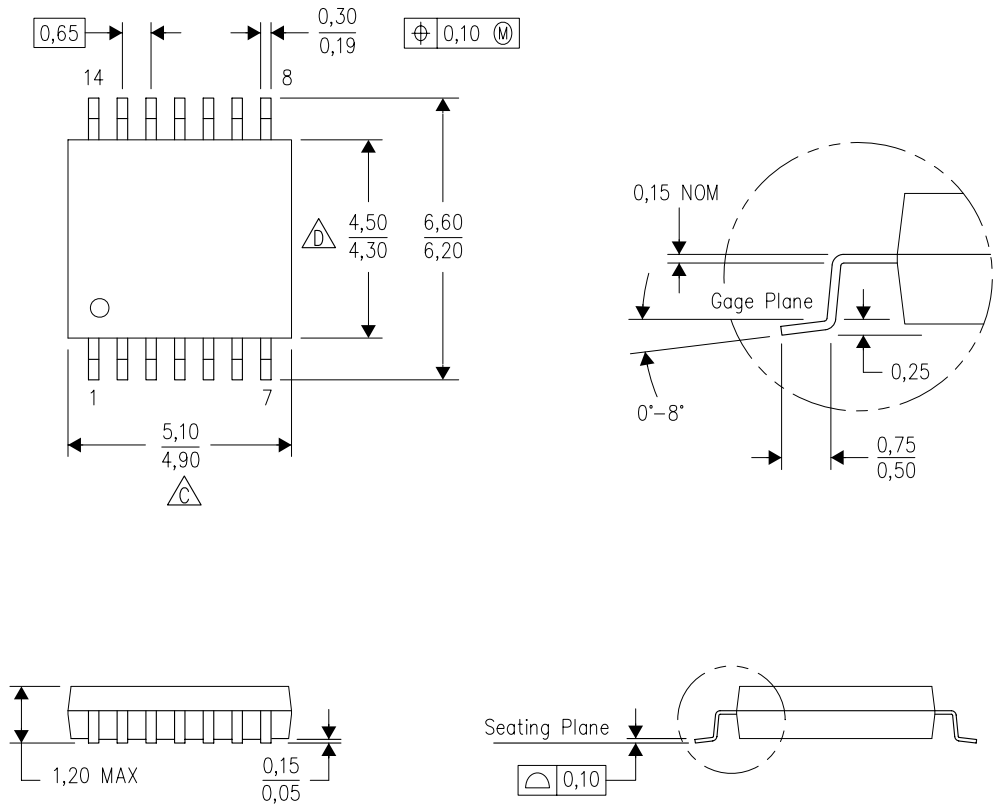

4040064–3/G 02/11

NOTES:
A. All linear dimensions are in millimeters. Dimensioning and tolerancing per ASME Y14.5M–1994.
B. This drawing is subject to change without notice.
C. Body length does not include mold flash, protrusions, or gate burrs. Mold flash, protrusions, or gate burrs shall not exceed 0,15 each side.
D. Body width does not include interlead flash. Interlead flash shall not exceed 0,25 each side.
E. Falls within JEDEC MO–153

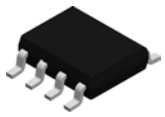

PACKAGE OUTLINE

D0008A

SOIC - 1.75 mm max height

SMALL OUTLINE INTEGRATED CIRCUIT

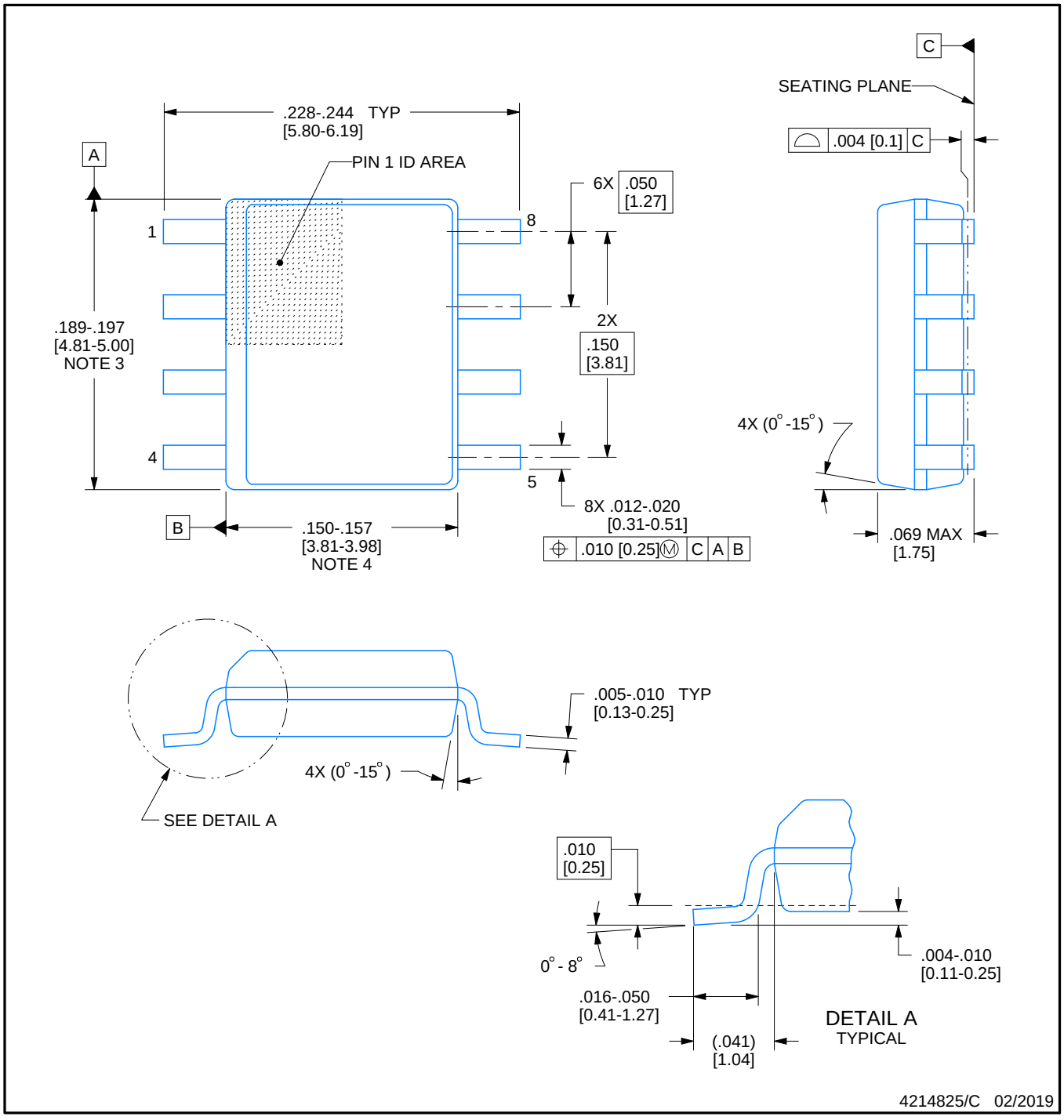

NOTES:

1. Linear dimensions are in inches [millimeters]. Dimensions in parenthesis are for reference only. Controlling dimensions are in inches. Dimensioning and tolerancing per ASME Y14.5M.
2. This drawing is subject to change without notice.
3. This dimension does not include mold flash, protrusions, or gate burrs. Mold flash, protrusions, or gate burrs shall not exceed .006 [0.15] per side.
4. This dimension does not include interlead flash.
5. Reference JEDEC registration MS-012, variation AA.

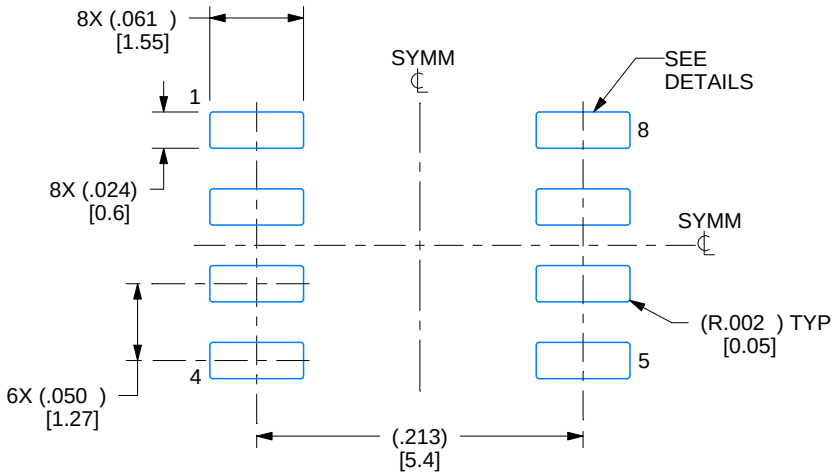

LAND PATTERN EXAMPLE
EXPOSED METAL SHOWN
SCALE:8X

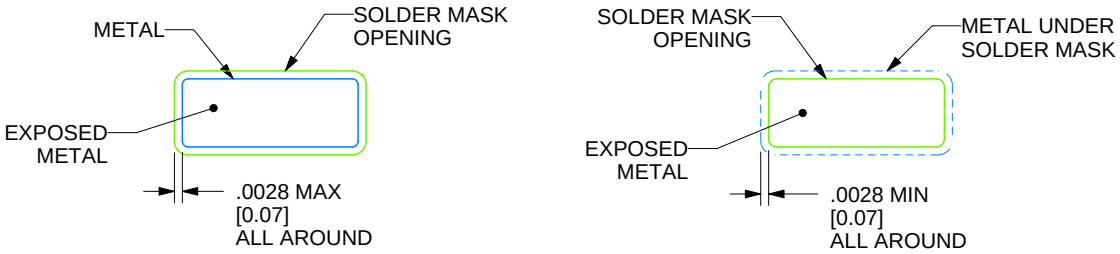

SOLDER MASK DETAILS

4214825/C 02/2019

NOTES: (continued)

6. Publication IPC-7351 may have alternate designs.
7. Solder mask tolerances between and around signal pads can vary based on board fabrication site.

EXAMPLE STENCIL DESIGN

D0008A

SOIC - 1.75 mm max height

SMALL OUTLINE INTEGRATED CIRCUIT

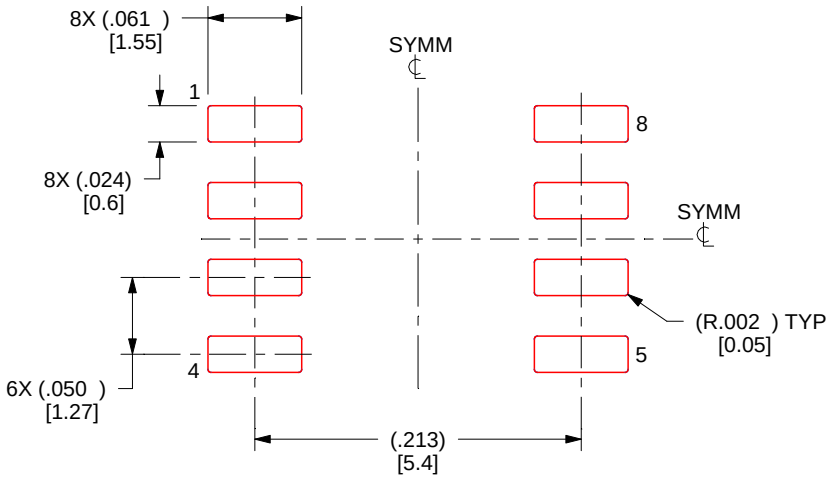

SOLDER PASTE EXAMPLE
BASED ON .005 INCH [0.125 MM] THICK STENCIL
SCALE:8X

4214825/C 02/2019

NOTES: (continued)

8. Laser cutting apertures with trapezoidal walls and rounded corners may offer better paste release. IPC-7525 may have alternate design recommendations.
9. Board assembly site may have different recommendations for stencil design.

PACKAGE OUTLINE

PW0008A

TSSOP - 1.2 mm max height

SMALL OUTLINE PACKAGE

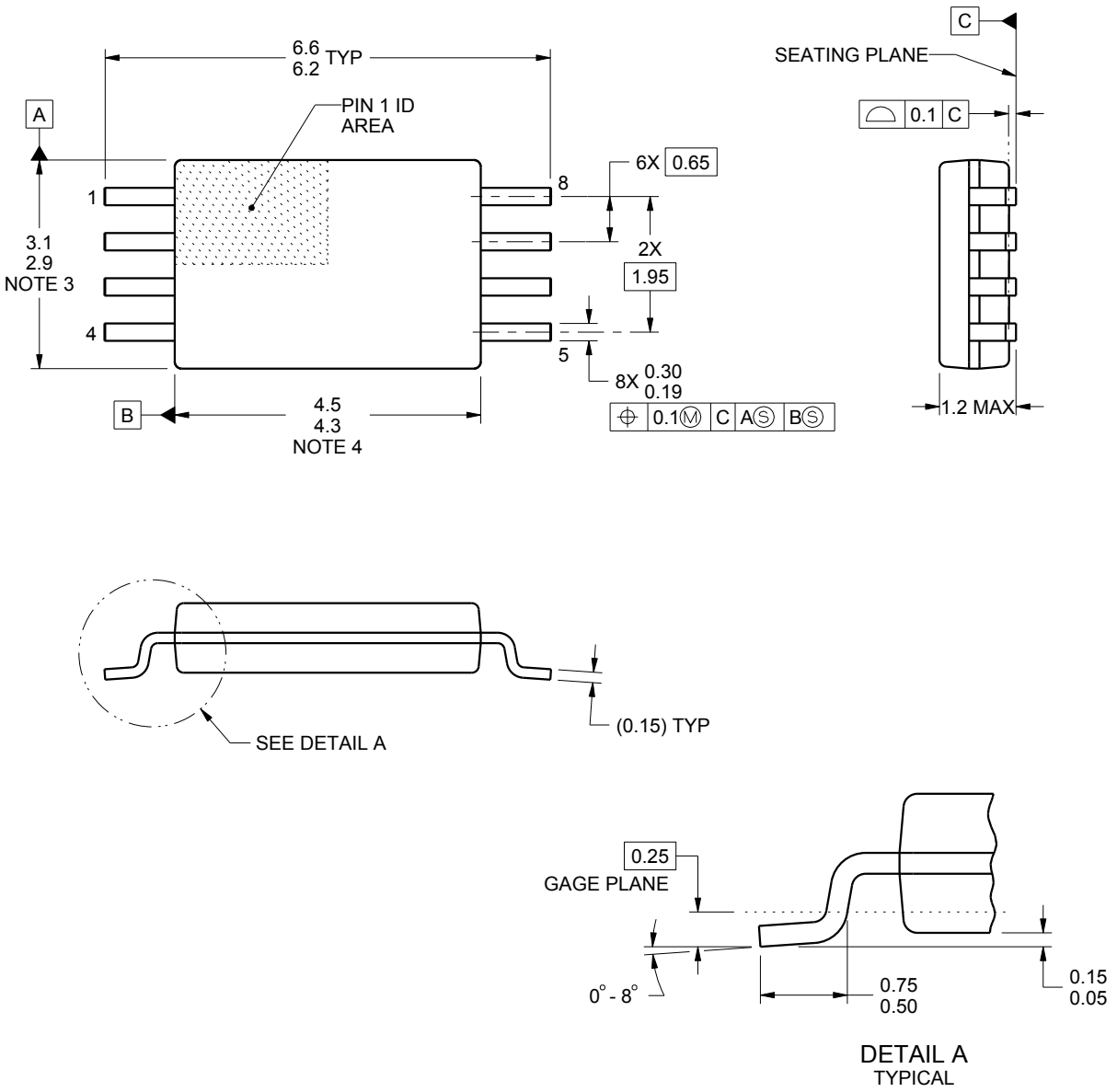

NOTES:

1. All linear dimensions are in millimeters. Any dimensions in parenthesis are for reference only. Dimensioning and tolerancing per ASME Y14.5M.
2. This drawing is subject to change without notice.
3. This dimension does not include mold flash, protrusions, or gate burrs. Mold flash, protrusions, or gate burrs shall not exceed 0.15 mm per side.
4. This dimension does not include interlead flash. Interlead flash shall not exceed 0.25 mm per side.
5. Reference JEDEC registration MO-153, variation AA.

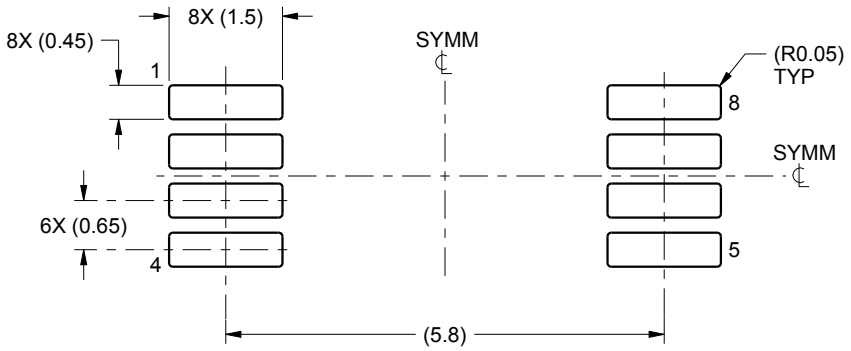

LAND PATTERN EXAMPLE
SCALE:10X

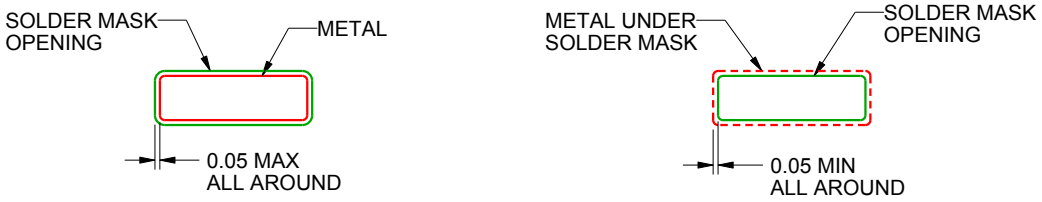

SOLDER MASK DETAILS
NOT TO SCALE

4221848/A 02/2015

NOTES: (continued)

6. Publication IPC-7351 may have alternate designs.
7. Solder mask tolerances between and around signal pads can vary based on board fabrication site.

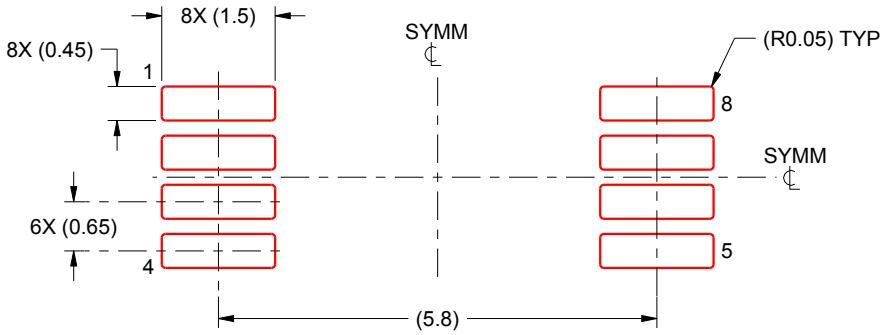

SOLDER PASTE EXAMPLE
BASED ON 0.125 mm THICK STENCIL
SCALE:10X

4221848/A 02/2015

NOTES: (continued)

8. Laser cutting apertures with trapezoidal walls and rounded corners may offer better paste release. IPC-7525 may have alternate design recommendations.
9. Board assembly site may have different recommendations for stencil design.

IMPORTANT NOTICE AND DISCLAIMER

TI PROVIDES TECHNICAL AND RELIABILITY DATA (INCLUDING DATA SHEETS), DESIGN RESOURCES (INCLUDING REFERENCE DESIGNS), APPLICATION OR OTHER DESIGN ADVICE, WEB TOOLS, SAFETY INFORMATION, AND OTHER RESOURCES “AS IS” AND WITH ALL FAULTS, AND DISCLAIMS ALL WARRANTIES, EXPRESS AND IMPLIED, INCLUDING WITHOUT LIMITATION ANY IMPLIED WARRANTIES OF MERCHANTABILITY, FITNESS FOR A PARTICULAR PURPOSE OR NON-INFRINGEMENT OF THIRD PARTY INTELLECTUAL PROPERTY RIGHTS.

These resources are intended for skilled developers designing with TI products. You are solely responsible for (1) selecting the appropriate TI products for your application, (2) designing, validating and testing your application, and (3) ensuring your application meets applicable standards, and any other safety, security, regulatory or other requirements.

These resources are subject to change without notice. TI grants you permission to use these resources only for development of an application that uses the TI products described in the resource. Other reproduction and display of these resources is prohibited. No license is granted to any other TI intellectual property right or to any third party intellectual property right. TI disclaims responsibility for, and you will fully indemnify TI and its representatives against, any claims, damages, costs, losses, and liabilities arising out of your use of these resources.

TI’s products are provided subject to TI’s Terms of Sale or other applicable terms available either on ti.com or provided in conjunction with such TI products. TI’s provision of these resources does not expand or otherwise alter TI’s applicable warranties or warranty disclaimers for TI products.

TI objects to and rejects any additional or different terms you may have proposed.

Mailing Address: Texas Instruments, Post Office Box 655303, Dallas, Texas 75265
Copyright © 2024, Texas Instruments Incorporated