EP8863-000 ✔ ACTIVE

RAYCHEM | RAYCHEM ESZH-CAP

TE Internal #: EP8863-000

Heat Shrink Caps, Dual Wall Wall, -40 - 125 °C [-40 - 257 °F], RAYCHEM ESZH-CAP

View on TE.com >

Wire Protection & Management > Heat Shrink Shapes > Heat Shrink Caps



Wall Type: **Dual Wall**

Operating Temperature Range: **-40 - 125 °C [-40 - 257 °F]**

Features

Product Type Features

Wall Type	Dual Wall

Body Features

Sealant Type	Anti-Flux
Lining Type	Adhesive
Shrink Ratio	4:1
Primary Product Material	Irradiated Modified Polyolefin
Flexibility	Semi-Rigid
Primary Product Color	Black

Dimensions

Expanded Inside Diameter (Min)	10.85 mm[.425 in]
Product Length	40 mm[1.575 in]

Usage Conditions

Flammability Requirement	Non-Flame-Retardant
Fluid Resistance Type	(ATF) Automatic Transmission Fluid, Brake Fluid, Diesel Fuel, Engine Cleaner, Engine Coolant
Resistance Properties	Moisture & Spray Protection
Operating Temperature Range	-40 - 125 °C[-40 - 257 °F]

Operation/Application

Mechanical Resistance	Abrasion

Product Compliance

For compliance documentation, visit the product page on TE.com>

EU RoHS Directive 2011/65/EU	Compliant
EU ELV Directive 2000/53/EC	Compliant
China RoHS 2 Directive MIIT Order No 32, 2016	No Restricted Materials Above Threshold
EU REACH Regulation (EC) No. 1907/2006	Current ECHA Candidate List: JAN 2024 (240) Candidate List Declared Against: JAN 2024 (240) Does not contain REACH SVHC
Halogen Content	Low Halogen - Br, Cl, F, I < 900 ppm per homogenous material. Also BFR/CFR/PVC Free
Solder Process Capability	Not applicable for solder process capability

Product Compliance Disclaimer

This information is provided based on reasonable inquiry of our suppliers and represents our current actual knowledge based on the information they provided. This information is subject to change. The part numbers that TE has identified as EU RoHS compliant have a maximum concentration of 0.1% by weight in homogenous materials for lead, hexavalent chromium, mercury, PBB, PBDE, DBP, BBP, DEHP, DIBP, and 0.01% for cadmium, or qualify for an exemption to these limits as defined in the Annexes of Directive 2011/65/EU (RoHS2). Finished electrical and electronic equipment products will be CE marked as required by Directive 2011/65/EU. Components may not be CE marked. Additionally, the part numbers that TE has identified as EU ELV compliant have a maximum concentration of 0.1% by weight in homogenous materials for lead, hexavalent chromium, and mercury, and 0.01% for cadmium, or qualify for an exemption to these limits as defined in the Annexes of Directive 2000/53/EC (ELV). Regarding the REACH Regulation, the information TE provides on SVHC in articles for this part number is based on the latest European Chemicals Agency (ECHA) 'Guidance on requirements for substances in articles' posted at this URL: https://echa.europa.eu/guidance-documents/guidance-on-reach

Compatible Parts



TE Part # 2280355-1
220 V MODEL 17



TE Part # 1-2234800-1
RBK-X1, AUTO TRIGGER



TE Part # 1-2234800-3
RBK-X1, W/ AIR COOLING



TE Part # 1-2234800-4
RBK-X1 CE, W/ AIR COOLING



TE Part # 1-2376800-3
RBK-X1C, W/ AIR COOLING



TE Part # 1-2376800-4
RBK-X1C CE, W/ AIR COOLING



TE Part # 2234800-1
RBK-X1 STD



TE Part # 2234800-2
RBK-X1 CE STD



TE Part # 2376800-1
RBK-X1C STD



TE Part # 2376800-2
RBK-X1C CE STD

Also in the Series | RAYCHEM ESZH-CAP



Heat Shrink Caps(8)

Customers Also Bought



TE Part # FC2311-0000-0250-L
FC23 MV 2FT CABLE 250L



TE Part # 3-640442-2
MTA Receptacle: Nylon, Tin Plated, 2.54 mm

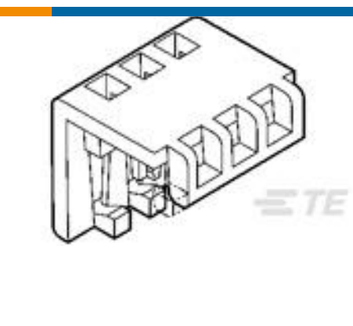

TE Part # 643075-2
02P MTA100 MOLDED COVER



TE Part # 5414946-2
PLUG, CBL, STR, SMB, PB FREE

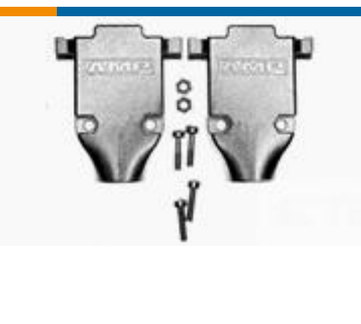

TE Part # 5748678-1
2 PC PLST CBL CLMP KIT

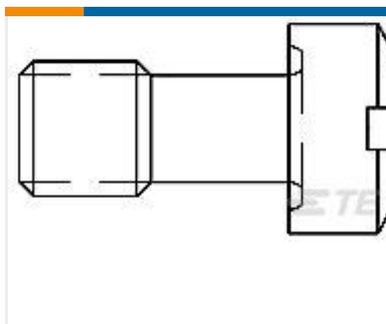

TE Part # 5747971-3
MOUNTING SCREW, ZN PLTD



TE Part # 5-1623930-4
CFR25 5% 220R



TE Part # 9-146278-0
40 MODII HDR SRST B/A .100CL



TE Part # EP8864-000
ESZH-CAP-NO.3-50MM

Documents

Datasheets & Catalog Pages

Easy-Seal-Zero-Halogen-Cap

English

Product Specifications

Application Specification

English