104891-3 ✔ ACTIVE

AMPMODU | AMPMODU 50/50 Grid

TE Internal #: 104891-3

Terminating Cover, Black, Polyester, 30 Position, AMPMODU 50/50 Grid

View on TE.com >

Connectors > Connector Accessories > Connector Caps & Covers

Connector Cover Type: **Terminating Cover**

Primary Product Color: **Black**

Primary Product Material: **Polyester**

Number of Positions: **30**

Operating Temperature (Max): **105 °C [221 °F]**

Features

Product Type Features

Product Profile	Standard
Connector Cover Type	Terminating Cover

Configuration Features

Number of Rows	2
Number of Positions	30

Body Features

Connector Cover Side	Front
Primary Product Color	Black
Primary Product Material	Polyester

Housing Features

Centerline (Pitch)	1.27 mm[.05 in]

Dimensions

Row-to-Row Spacing	1.27 mm[.05 in]

Usage Conditions

Operating Temperature (Max)	105 °C[221 °F]
Operating Temperature Range	-65 - 105 °C[-85 - 221 °F]

Industry Standards

UL Flammability Rating	UL 94V-0

Product Compliance

For compliance documentation, visit the product page on TE.com>

EU RoHS Directive 2011/65/EU	Compliant
EU ELV Directive 2000/53/EC	Compliant
China RoHS 2 Directive MIIT Order No 32, 2016	No Restricted Materials Above Threshold
EU REACH Regulation (EC) No. 1907/2006	Current ECHA Candidate List: JAN 2024 (240) Candidate List Declared Against: JAN 2024 (240) Does not contain REACH SVHC
Halogen Content	Not Low Halogen - contains Br or Cl > 900 ppm.
Solder Process Capability	Not applicable for solder process capability

Product Compliance Disclaimer

This information is provided based on reasonable inquiry of our suppliers and represents our current actual knowledge based on the information they provided. This information is subject to change. The part numbers that TE has identified as EU RoHS compliant have a maximum concentration of 0.1% by weight in homogenous materials for lead, hexavalent chromium, mercury, PBB, PBDE, DBP, BBP, DEHP, DIBP, and 0.01% for cadmium, or qualify for an exemption to these limits as defined in the Annexes of Directive 2011/65/EU (RoHS2). Finished electrical and electronic equipment products will be CE marked as required by Directive 2011/65/EU. Components may not be CE marked. Additionally, the part numbers that TE has identified as EU ELV compliant have a maximum concentration of 0.1% by weight in homogenous materials for lead, hexavalent chromium, and mercury, and 0.01% for cadmium, or qualify for an exemption to these limits as defined in the Annexes of Directive 2000/53/EC (ELV). Regarding the REACH Regulation, the information TE provides on SVHC in articles for this part number is based on the latest European Chemicals Agency (ECHA) 'Guidance on requirements for substances in articles' posted at this URL: https://echa.europa.eu/guidance-documents/guidance-on-reach

Compatible Parts

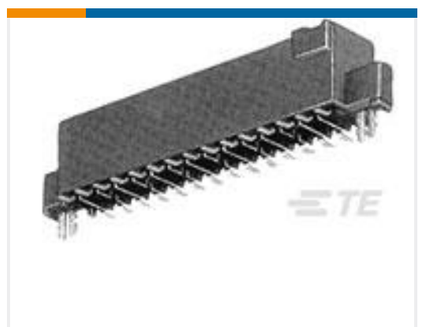

TE Part # 104652-3
30 50/50 GRID DRST SFMNT RCPT

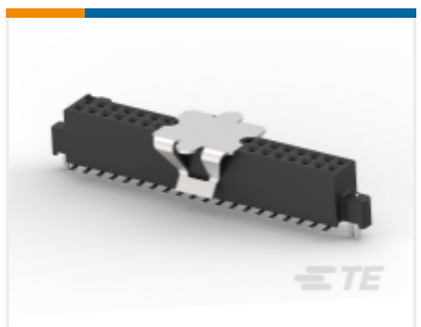

TE Part # 147384-3
30 50/50 GRID DR SMT RCPT VC

Also in the Series | AMPMODU 50/50 Grid

Connector Caps & Covers(9)

Insertion & Extraction Tools(1)

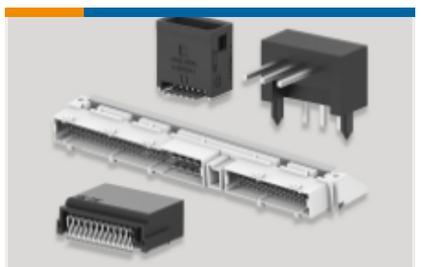

PCB Headers & Receptacles(299)

Ribbon Cable Connectors(34)

Customers Also Bought

TE Part # 640250-9
09P SL156 HSG W/LCK RAMP NATL

TE Part # 487223-1
010 HOUSING FFC RCPT 100CL DR

TE Part # 8-31886-1
PIDG Ring Tongue Terminals

TE Part # 52263-3
TERMINAL R PG 8 10

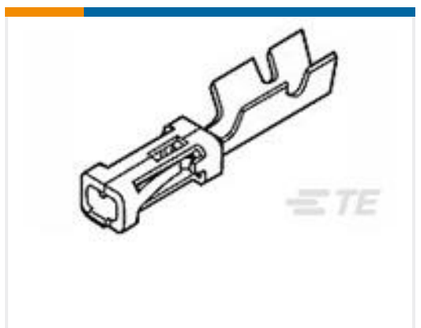

TE Part # 2-87195-6
MOD IV RECP LP, 30 Au, TIN, RoHS

TE Part # 88017-6
FFC RCPT CONTACT L.P.

TE Part # 2317170-1
AMPL REC HD22, VERT, 26P, THREADED

Documents

Product Drawings

30 50/50 GRID CABLE RCPT COVER

English

CAD Files

3D PDF

English

Customer View Model

ENG_CVM_104891-3_C.3d_igs.zip

English

Customer View Model

ENG_CVM_104891-3_C.3d_stp.zip

English

Customer View Model

ENG_CVM_104891-3_C.2d_dxf.zip

English

By downloading the CAD file I accept and agree to the Terms and Conditions of use.

Datasheets & Catalog Pages

AMPMODU_INTERCONNECTION_SYSTEM_SECTION1AND2

English

Ribbon Cable Interconnect Solutions

English

Fine Pitch Stacking Connectors - 1.27mm AMPMODU 50/50 Grid Connectors

English

Product Specifications

Application Specification

English