1-87631-4 ✔ ACTIVE

AMPMODU | AMPMODU IV/V

TE Internal #: 1-87631-4

Housing, Receptacle, Wire-to-Board, 18 Position, .1 in [2.54 mm] Centerline, Crimp, 2 Row, Black, Mating Retention, Wire & Cable, Signal, AMPMODU IV/V

View on TE.com >

Connectors > PCB Connectors > Wire-to-Board Connectors > Wire-to-Board Connector Assemblies & Housings

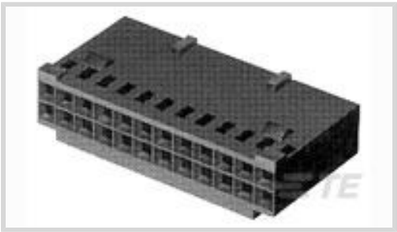

Connector Product Type: **Housing**

Connector & Housing Type: **Receptacle**

Connector System: **Wire-to-Board**

Number of Positions: **18**

Centerline (Pitch): **2.54 mm [.1 in]**

Features

Product Type Features

Connector Product Type	Housing
Connector & Housing Type	Receptacle
Connector System	Wire-to-Board
Connector & Contact Terminates To	Wire & Cable

Configuration Features

Number of Positions	18
Number of Rows	2

Electrical Characteristics

Termination Resistance	12 mΩ
Insulation Resistance	5000 MΩ
Dielectric Withstanding Voltage (Max)	750 V
Operating Voltage	250 VAC

Body Features

Primary Product Color	Black

Contact Features

Contact Type	Socket
Contact Base Material	Beryllium Copper
Contact Current Rating (Max)	3 A

Termination Features

Termination Method to Wire & Cable	Crimp

Mechanical Attachment

Strain Relief	Without
Mating Retention Type	Detent Latching
Mating Retention	With

Housing Features

Housing Entry Configuration	Both Ends Closed
Housing Material	Nylon - GF
Centerline (Pitch)	2.54 mm[.1 in]

Dimensions

Connector Length	22.86 mm[.9 in]
Connector Height	3.14 mm[.24 in]
Row-to-Row Spacing	2.54 mm[.1 in]

Usage Conditions

Operating Temperature Range	-65 - 105 °C[-85 - 221 °F]

Operation/Application

Circuit Application	Signal

Industry Standards

Glow Wire Rating	Standard Part - Not Glow Wire
Compatible With Approved Standards Products	CSA LR7189, UL E28476
UL Flammability Rating	UL 94V-0

Packaging Features

Packaging Quantity	1
Packaging Method	Package

Product Compliance

For compliance documentation, visit the product page on TE.com>

EU RoHS Directive 2011/65/EU	Compliant
EU ELV Directive 2000/53/EC	Compliant
China RoHS 2 Directive MIIT Order No 32, 2016	No Restricted Materials Above Threshold

EU REACH Regulation (EC) No. 1907/2006	Current ECHA Candidate List: JAN 2024 (240) Candidate List Declared Against: JAN 2024 (240) Does not contain REACH SVHC
Halogen Content	BFR/CFR/PVC Free, but Br/Cl >900 ppm in other sources.
Solder Process Capability	Not applicable for solder process capability

Product Compliance Disclaimer

This information is provided based on reasonable inquiry of our suppliers and represents our current actual knowledge based on the information they provided. This information is subject to change. The part numbers that TE has identified as EU RoHS compliant have a maximum concentration of 0.1% by weight in homogenous materials for lead, hexavalent chromium, mercury, PBB, PBDE, DBP, BBP, DEHP, DIBP, and 0.01% for cadmium, or qualify for an exemption to these limits as defined in the Annexes of Directive 2011/65/EU (RoHS2). Finished electrical and electronic equipment products will be CE marked as required by Directive 2011/65/EU. Components may not be CE marked. Additionally, the part numbers that TE has identified as EU ELV compliant have a maximum concentration of 0.1% by weight in homogenous materials for lead, hexavalent chromium, and mercury, and 0.01% for cadmium, or qualify for an exemption to these limits as defined in the Annexes of Directive 2000/53/EC (ELV). Regarding the REACH Regulation, the information TE provides on SVHC in articles for this part number is based on the latest European Chemicals Agency (ECHA) 'Guidance on requirements for substances in articles' posted at this URL: https://echa.europa.eu/guidance-documents/guidance-on-reach

Compatible Parts

TE Part # 87666-2
MOD IV RECP PLTD 30 SEL

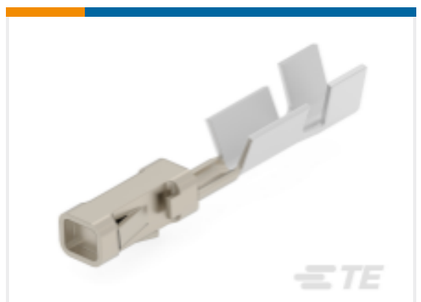

TE Part # 6-87756-7
MOD IV REC STP INT'L SPEC REEL

TE Part # 87756-6
MOD IV RECP PLTD SN

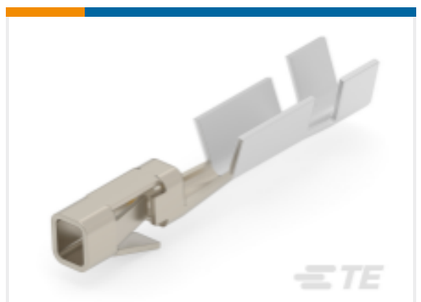

TE Part # 2-87195-4
MOD IV RECP PLTE 15 DPLX

TE Part # 87809-1
MOD V RECP PLTD 30 AU

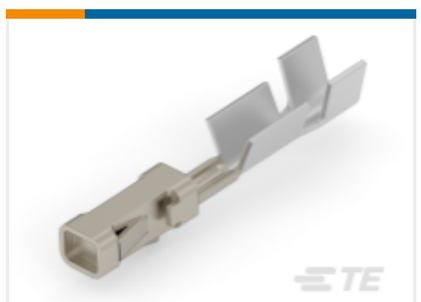

TE Part # 6-87756-2
MOD IV RECP PLTD 15 DPLX LF

TE Part # 87309-9
MOD V RECP PLTD 30 AU

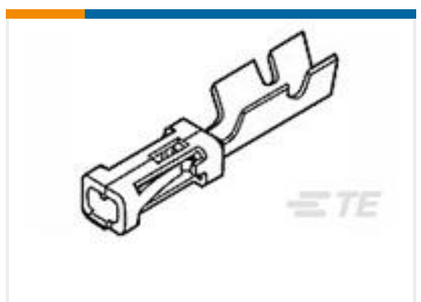

TE Part # 102917-5
MOD IV RECP PLTD 15 SEL

TE Part # 87523-5
MOD IV RECP PLTD SN

TE Part # 102548-5
MOD IV RECP PLTD 30 SEL

TE Part # 87309-8
MOD V RECP PLTD SN

TE Part # 2-87523-3
MOD IV RECP PLTD 15 DPLX

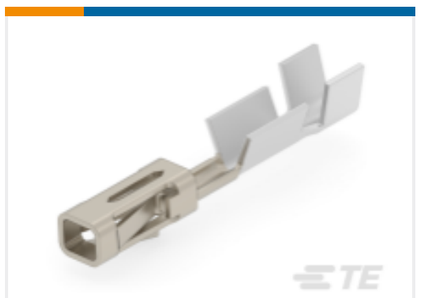

TE Part # 5-103171-4
MOD IV RECP PLTD 30 DPLX LF

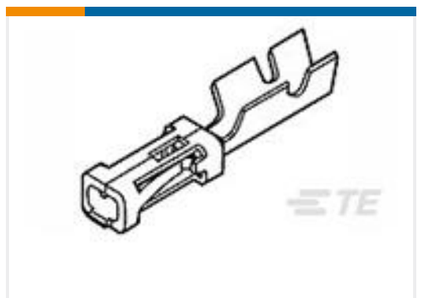

TE Part # 85969-8
MOD IV RECP PLTD 30 SEL

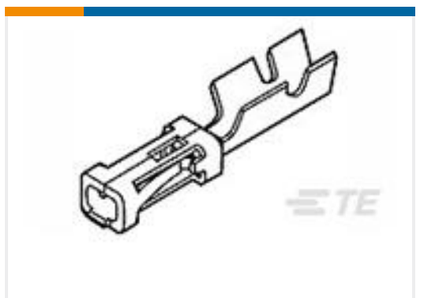

TE Part # 5-102920-1
MOD IV RECP PLTD 30 DPLX LF

TE Part # 103455-1
MOD V RECP PLTD 30 AU

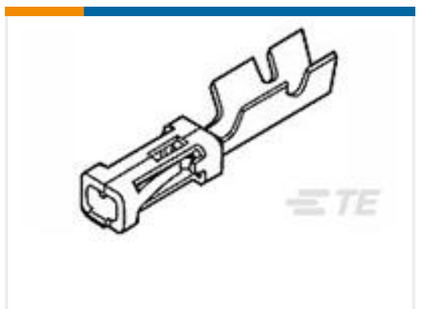

TE Part # 102316-6
MOD IV RECP PLTD 15 DPLX

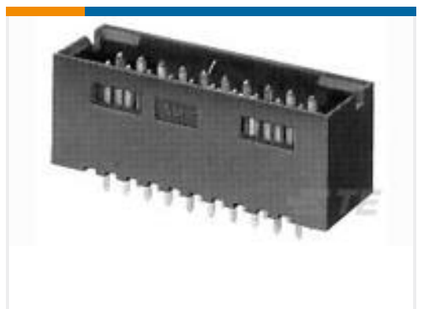

TE Part # 103169-7
18 MODII HDR DRST SHRD .100CL

TE Part # 88189-4
018 HOUSING FFC PIN DR 100CL

TE Part # 87666-3
MOD IV RECP PLTD SN

Also in the Series | AMPMODU IV/V

Automotive Housings(1)

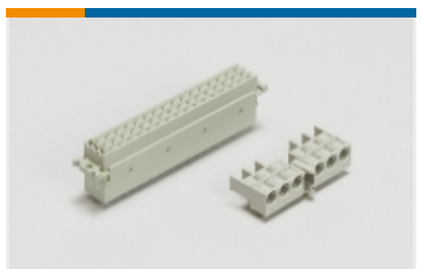

Backplane Connector Housings(1)

Connector Caps & Covers(18)

Connector Contacts(321)

Connector Hardware(13)

Connector Strain Relief(3)

Insertion & Extraction Tools(4)

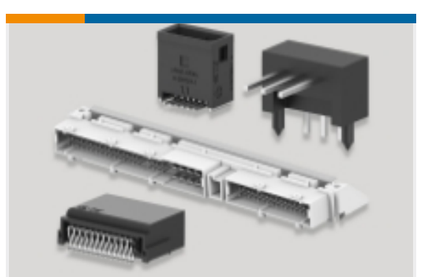

PCB Headers & Receptacles(931)

Rectangular Connector Housings(5)

Standard Rectangular Connectors(8)

Wire-to-Board Connector Assemblies & Housings(444)

Customers Also Bought

TE Part # 5748677-3
PLTD PLST CBL CLMP KIT,SZ 3

TE Part # 103653-5
06 MTE SHRD PIN HSG SR LATCH

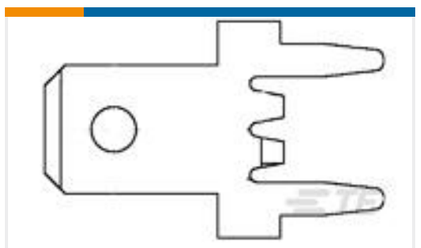

TE Part # 1217133-1
187 FASTON,PCB TAB,TNBR

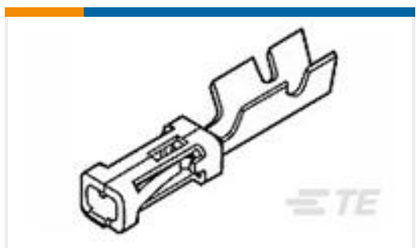

TE Part # 102128-2
MOD V RECP LP

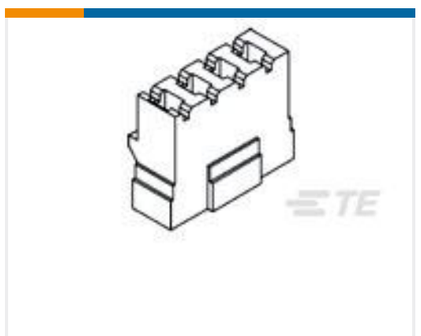

TE Part # 1609146-2
PA102 CONNECTOR PIN=F6999

TE Part # 1658527-2
622-0630LF FEM SOCKT,LEAD FREE

TE Part # NB14032001
TAT-125-3/16-0-STK

TE Part # 5-102619-8
20 MODII HDR DRST SHRD .100CL

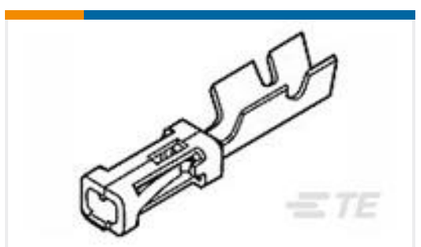

TE Part # 87667-3
MOD IV RECP LP

Documents

Product Drawings

18 MODIV HSG DR MKRD .100 POL

English

CAD Files

3D PDF

3D

Customer View Model

ENG_CVM_CVM_1-87631-4_AN.2d_dxf.zip

English

Customer View Model

ENG_CVM_CVM_1-87631-4_AN.3d_igs.zip

English

Customer View Model

ENG_CVM_CVM_1-87631-4_AN.3d_stp.zip

English

By downloading the CAD file I accept and agree to the Terms and Conditionsof use.

Datasheets & Catalog Pages

AMPMODU_INTERCONNECTION_SYSTEM_SECTION5_CONT

English

Product Specifications

Application Specification

English

Agency Approvals

UL

English