T1280162125-000 ✔ ACTIVE

HDC | HDC IP65

TE Internal #: T1280162125-000

Heavy Duty Connector Hood, Top & Side Entry, Locking Clip, Sealable, HDC IP65

View on TE.com >

Connectors > Rectangular Connectors > Rectangular Connector Hoods & Bases

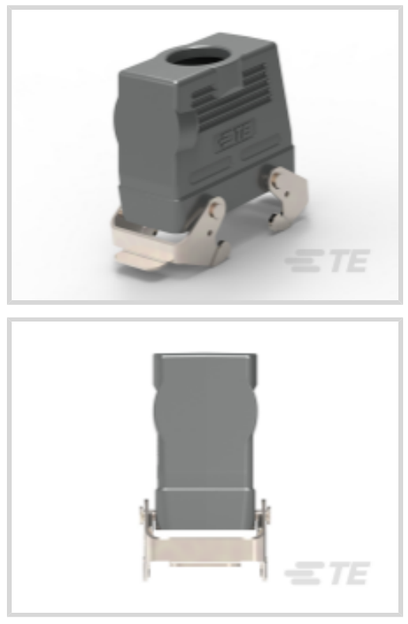
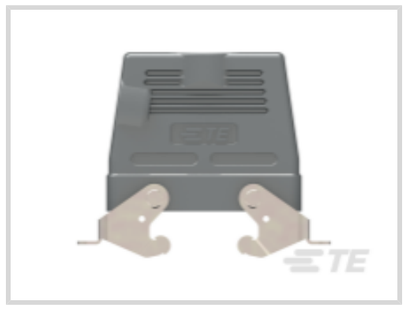



Hood & Base Connector Product Type: **Hood**

Cable Entry Location: **Top & Side**

Hood & Base Locking Device Type: **Locking Clip**

Sealable: **Yes**

Features

Product Type Features

Hood & Base Connector Product Type	Hood
Sealable	Yes

Body Features

Cable Entry Location	Top & Side

Mechanical Attachment

Thread Size	M25
Hood & Base Locking Device Type	Locking Clip

Housing Features

Housing Material	Die Cast Aluminum

Usage Conditions

Corrosion Protected	Yes

Operation/Application

Circuit Application	Power & Signal

Product Compliance

For compliance documentation, visit the product page on TE.com>

EU RoHS Directive 2011/65/EU	Compliant
EU ELV Directive 2000/53/EC	Compliant
China RoHS 2 Directive MIIT Order No 32, 2016	No Restricted Materials Above Threshold
EU REACH Regulation (EC) No. 1907/2006	Current ECHA Candidate List: JAN 2024 (240) Candidate List Declared Against: JAN 2024 (240) Does not contain REACH SVHC
Halogen Content	Low Halogen - Br, Cl, F, I < 900 ppm per homogenous material. Also BFR/CFR/PVC Free
Solder Process Capability	Not reviewed for solder process capability

Product Compliance Disclaimer

This information is provided based on reasonable inquiry of our suppliers and represents our current actual knowledge based on the information they provided. This information is subject to change. The part numbers that TE has identified as EU RoHS compliant have a maximum concentration of 0.1% by weight in homogenous materials for lead, hexavalent chromium, mercury, PBB, PBDE, DBP, BBP, DEHP, DIBP, and 0.01% for cadmium, or qualify for an exemption to these limits as defined in the Annexes of Directive 2011/65/EU (RoHS2). Finished electrical and electronic equipment products will be CE marked as required by Directive 2011/65/EU. Components may not be CE marked. Additionally, the part numbers that TE has identified as EU ELV compliant have a maximum concentration of 0.1% by weight in homogenous materials for lead, hexavalent chromium, and mercury, and 0.01% for cadmium, or qualify for an exemption to these limits as defined in the Annexes of Directive 2000/53/EC (ELV). Regarding the REACH Regulation, the information TE provides on SVHC in articles for this part number is based on the latest European Chemicals Agency (ECHA) 'Guidance on requirements for substances in articles' posted at this URL: https://echa.europa.eu/guidance-documents/guidance-on-reach

Compatible Parts



TE Part # T2040162101-000
HE-016-M



TE Part # T3609250102-000
DLX-25-M



TE Part # T1420160000-000
H16B-AG-BO

Also in the Series | HDC IP65



Rectangular Connector Hoods & Bases (1258)

Customers Also Bought



TE Part # 1-480711-9
15P UMNL CAP HSG BLK



TE Part # 640250-1
01P SL156 HSG W/LCK RAMP NATL



TE Part # T2020082201-000
HD-008-F



TE Part # T0931003003-000
CODING-PIN-M3



TE Part # 1SNA195638R2300
M4/6.4A.P



TE Part # T1730060000-000
H6B-TBF-T



TE Part # T2120100219-000
ZGG-10DSTK,1-7,2-8,3-9,4-6,5-10



TE Part # T2120100220-000
ZGGP-H10BSK 1-7/2-8/3-9/4-6/5-10

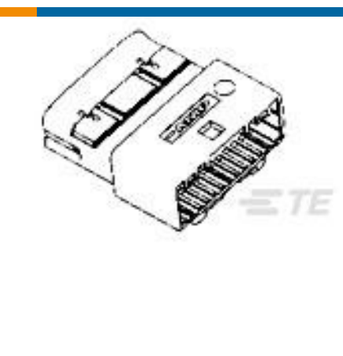

TE Part # 1473203-1
025 CAP ASSY 16P P/BACK BRCKT

Documents

Product Drawings

H16B-TGBH-M25

English

CAD Files

3D PDF

3D

Customer View Model

ENG_CVM_CVM_T1280162125-000_A.2d_dxf.zip

English

Customer View Model

ENG_CVM_CVM_T1280162125-000_A.3d_igs.zip

English

Customer View Model

ENG_CVM_CVM_T1280162125-000_A.3d_stp.zip

English

By downloading the CAD file I accept and agree to the Terms and Conditionsof use.

Datasheets & Catalog Pages

HEAVY DUTY CONNECTORS

English

HEAVY DUTY CONNECTORS

Japanese

Product Specifications

Application Specification

English