MACX MCR-VAC - Voltage measuring transducers

2906239

https://www.phoenixcontact.com/us/products/2906239

Please be informed that the data shown in this PDF document is generated from our online catalog. Please find the complete data in the user documentation. Our general terms of use for downloads are valid.



MACX MCR voltage transducer, for AC voltages from 0 V ... 20 V AC to 0 ... 660 V AC, output signal: 0 V ... 10 V/0(4) ... 20 mA

Your advantages

- Adjustable voltage ranges
- Bidirectional output signals
- 3-way isolation
- ZERO/SPAN adjustment ±20 %
- Tool-free parameterization of measured values
- Teach-in configuration of the measured value range

Commercial data

Item number	2906239
Packing unit	1 pc
Minimum order quantity	1 pc
Sales key	C445
Product key	CK4B11
Catalog page	Page 238 (C-5-2019)
GTIN	4055626051000
Weight per piece (including packing)	233.5 g
Weight per piece (excluding packing)	211 g
Customs tariff number	85437090
Country of origin	DE

Technical data

Product properties

Product type	Voltage transducer

Electrical properties

Alignment span	± 20 %
Alignment zero	± 20 %
Frequency measuring range	45 Hz ... 405 Hz
Protective circuit	Surge protection; 33 V suppressor diode
Step response (10-90%)	< 180 ms
Maximum temperature coefficient	< 0.015 %/K
Maximum transmission error	< 1 % (from a measuring range final value, 15 Hz ... 65 Hz)
	< 1.3 % (from a measuring range final value, 65 Hz ... 405 Hz)

Electrical isolation

Pollution degree	2

Electrical isolation Measuring circuit to supply circuit and output IEC 61010-2-030

Standards/regulations	IEC 61010-2-030
Test voltage	5.3 kV AC (50 Hz, 60 s)
Measuring category	II (1000 V)
	III (600 V)
	IV (300 V)
Insulation	Reinforced insulation

Electrical isolation Supply circuit to output circuit IEC 61010-1

Standards/regulations	IEC 61010-1
Test voltage	2.2 kV AC (50 Hz, 60 s)
Overvoltage category	III (300 V)
	IV (150 V)
Insulation	Basic insulation

Supply

Nominal supply voltage	24 V DC (-20 % ... +25 %)
Supply voltage range	19.2 V DC ... 30 V DC
Max. current consumption	< 45 mA

Input data

Measurement

Configurable/programmable	Yes
Input voltage range	0 V AC ... 550 V AC
Input resistance of voltage input	5500 kΩ
Maximum input voltage	+ 660 V AC
Impulse form	AC voltage

Measurement

Input voltage range	0 V AC ... 370 V AC
Input resistance of voltage input	3700 kΩ

Measurement

Input voltage range	0 V AC ... 250 V AC
Input resistance of voltage input	2500 kΩ

Measurement

Input voltage range	0 V AC ... 170 V AC
Input resistance of voltage input	1700 kΩ

Measurement

Input voltage range	0 V AC ... 120 V AC
Input resistance of voltage input	1200 kΩ

Measurement

Input voltage range	0 V AC ... 80 V AC
Input resistance of voltage input	800 kΩ

Measurement

Input voltage range	0 V AC ... 54 V AC
Input resistance of voltage input	800 kΩ

Measurement

Input voltage range	0 V AC ... 36 V AC
Input resistance of voltage input	800 kΩ

Measurement

Input voltage range	0 V AC ... 24 V AC
Input resistance of voltage input	240 kΩ

Output data

Signal: Voltage

Voltage output signal	0 V ... 10 V
	2 V ... 10 V
Max. voltage output signal	≤ 11 V
Load/output load voltage output	> 10 kΩ
Ripple	50 mV

Signal: Current

Current output signal	0 mA ... 20 mA
	4 mA ... 20 mA
Max. current output signal	≤ 22 mA
Load/output load current output	< 500 Ω
Max. capacitive load	< 1000 pF
Max. inductive load	< 1 mH

Connection data

Connection method	Screw connection
Stripping length	8 mm
Screw thread	M3
Conductor cross section rigid	0.2 mm² ... 2.5 mm²
Conductor cross section flexible	0.2 mm² ... 2.5 mm²
Conductor cross section AWG	24 ... 14

Dimensions

Width	22.5 mm
Height	113 mm
Depth	114 mm

Material specifications

Color	gray (RAL 7042)

Environmental and real-life conditions

Ambient conditions

Degree of protection	IP20
Ambient temperature (operation)	-25 °C ... 60 °C
Ambient temperature (storage/transport)	-40 °C ... 85 °C (non-condensing)
Altitude	≤ 2000 m
Permissible humidity (operation)	10 % ... 95 % (non-condensing)

Approvals

CE

Certificate	CE-compliant

UKCA

Certificate	UKCA-compliant

UL, USA/Canada

Identification	UL 61010 Listed

EMC data

Low Voltage Directive	Conformance with Low Voltage Directive
Noise immunity	EN 61000-6-2
Note	When being exposed to interference, there may be minimal deviations.
Electromagnetic compatibility	Conformance with EMC directive
Noise emission	EN 61000-6-4

Conducted interference

Frequency range	15 Hz ... 405 Hz

Mounting

Mounting type	DIN rail mounting
Assembly note	Can be aligned with spacing = 10 mm
Mounting position	any

Drawings

Block diagram

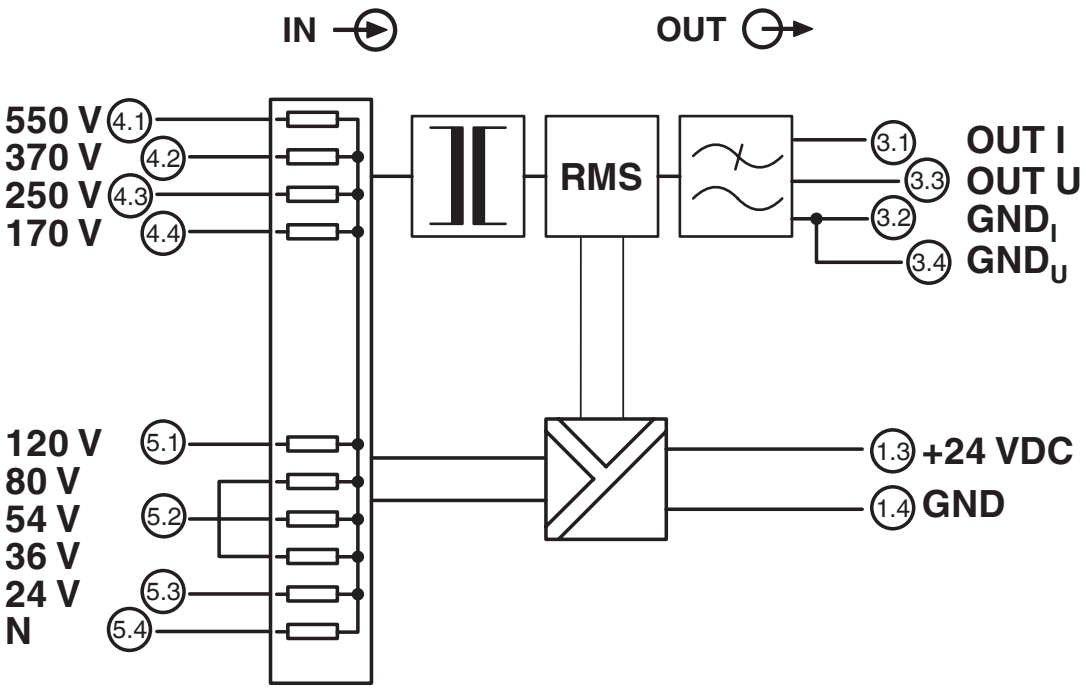

Approvals

To download certificates, visit the product detail page: https://www.phoenixcontact.com/us/products/2906239

EAC
Approval ID: RU*DE.*08.B.01852-19

UL Listed
Approval ID: FILE E 330267

cUL Listed
Approval ID: FILE E 330267

cULus Listed

Classifications

ECLASS

ECLASS-11.0	27210125
ECLASS-13.0	27210125
ECLASS-12.0	27210125

ETIM

ETIM 9.0	EC002477

UNSPSC

UNSPSC 21.0	39121000

Environmental product compliance

EU RoHS

Fulfills EU RoHS substance requirements	Yes
Exemption	7(a), 7(c)-I

China RoHS

Environment friendly use period (EFUP)	EFUP-50
	An article-related China RoHS declaration table can be found in the download area for the respective article under "Manufacturer declaration". For all articles with EFUP-E, no China RoHS declaration table issued and required.

EU REACH SVHC

REACH candidate substance (CAS No.)	Lead(CAS: 7439-92-1)
SCIP	6aea0446-e6e3-4321-a23f-333cd1eddf81

Phoenix Contact 2024 © - all rights reserved
https://www.phoenixcontact.com

Phoenix Contact USA
586 Fulling Mill Road
Middletown, PA 17057, United States
(+717) 944-1300
info@phoenixcon.com