1-2308349-1 ✔ ACTIVE

Rail D-Sub Backshells

TE Internal #: 1-2308349-1

Crimp Flange, Shielded, Rail D-Sub Backshells

View on TE.com >

Connectors > Connector Accessories > Connector Strain Relief > Crimp Flange for Size 1-3STD/1-4QL Shell

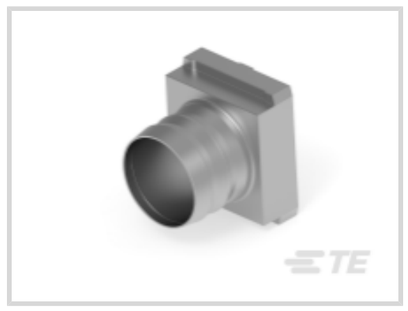





Strain Relief Accessory Type: **Crimp Flange**

Shielded: **Yes**

Thread Size: **None**

Operating Temperature Range: **-40 - 90 °C [-40 - 194 °F]**

All Crimp Flange for Size 1-3STD/1-4QL Shell (14)

Features

Product Type Features

Strain Relief Accessory Type	Crimp Flange

Mechanical Attachment

Thread Size	None

Usage Conditions

Operating Temperature Range	-40 - 90 °C[-40 - 194 °F]

Operation/Application

Shielded	Yes

Product Compliance

For compliance documentation, visit the product page on TE.com>

EU RoHS Directive 2011/65/EU	Compliant with Exemptions
EU ELV Directive 2000/53/EC	Not Yet Reviewed
China RoHS 2 Directive MIIT Order No 32, 2016	Restricted Materials Above Threshold
EU REACH Regulation (EC) No. 1907/2006	

	Current ECHA Candidate List: JAN 2024 (240) Candidate List Declared Against: JAN 2024 (240) SVHC > Threshold: Pb (3.5% in Component Part) **Article Safe Usage Statements:** Do not eat, drink or smoke when using this product. Wash thoroughly after handling. Recycle if possible and dispose of the article by following all applicable governmental regulations relevant to your geographic location.
Halogen Content	Low Halogen - Br, Cl, F, I < 900 ppm per homogenous material. Also BFR/CFR/PVC Free
Solder Process Capability	Not reviewed for solder process capability

Product Compliance Disclaimer

This information is provided based on reasonable inquiry of our suppliers and represents our current actual knowledge based on the information they provided. This information is subject to change. The part numbers that TE has identified as EU RoHS compliant have a maximum concentration of 0.1% by weight in homogenous materials for lead, hexavalent chromium, mercury, PBB, PBDE, DBP, BBP, DEHP, DIBP, and 0.01% for cadmium, or qualify for an exemption to these limits as defined in the Annexes of Directive 2011/65/EU (RoHS2). Finished electrical and electronic equipment products will be CE marked as required by Directive 2011/65/EU. Components may not be CE marked. Additionally, the part numbers that TE has identified as EU ELV compliant have a maximum concentration of 0.1% by weight in homogenous materials for lead, hexavalent chromium, and mercury, and 0.01% for cadmium, or qualify for an exemption to these limits as defined in the Annexes of Directive 2000/53/EC (ELV). Regarding the REACH Regulation, the information TE provides on SVHC in articles for this part number is based on the latest European Chemicals Agency (ECHA) 'Guidance on requirements for substances in articles' posted at this URL: https://echa.europa.eu/guidance-documents/guidance-on-reach

Compatible Parts



TE Part # CAT-R131-B2745
Crimp Barrel for D-Sub Connectors

Also in the Series | Rail D-Sub Backshells



Connector Backshells(55)



Connector Contacts(5)



Connector Hardware(19)



Connector Strain Relief(67)



Crimp D-Sub Connectors(10)



Insertion & Extraction Tools(2)

Customers Also Bought



TE Part # 1-2308272-1
CABLE CLAMPS (CASE RAW)



TE Part # 1-2308342-4
FULL METAL HOODS SIZE 3-4 (RAW)

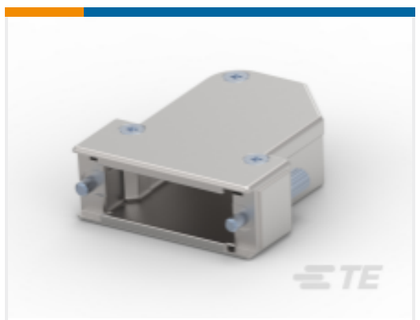

TE Part # 2-2308341-0
FULL METAL HOODS SIZE 2-10 (RAW 135 DEG)



TE Part # 796859-3
3 POS TERMI-BLOK PLUG RT ANGLE

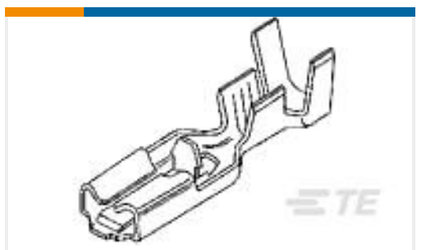

TE Part # 63313-1
PL 187 RECEPTACLE 20-16 AWG TPBR



TE Part # 796859-2
2 POS TERMI-BLOK PLUG RT ANGLE

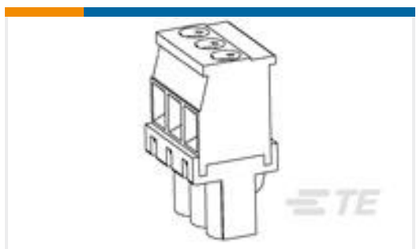

TE Part # 796861-3
3 POS TERMI-BLOK PLUG VERTICAL



TE Part # 1-2308321-1
FULL METAL HOODS SIZE 2, (1)



TE Part # 5053262043
RNF-100-3/4-4-STK

Documents

Product Drawings

CRIMP FLANGES SMALL

English

CAD Files

3D PDF

3D

Customer View Model

ENG_CVM_CVM_1-2308349-1_A.2d_dxf.zip

English

Customer View Model

ENG_CVM_CVM_1-2308349-1_A.3d_igs.zip

English

Customer View Model

ENG_CVM_CVM_1-2308349-1_A.3d_stp.zip

English

By downloading the CAD file I accept and agree to the Terms and Conditionsof use.

Datasheets & Catalog Pages

Rail D-Sub Backshells Flyer

English