1-2103157-2 ✔ ACTIVE

HVA 280

TE Internal #: 1-2103157-2

Automotive Connector EMC Shielding, Shield, Copper Alloy, HVA 280

View on TE.com >

Connectors > Automotive Connectors > Automotive Connector Accessories > Automotive Connector EMC Shielding

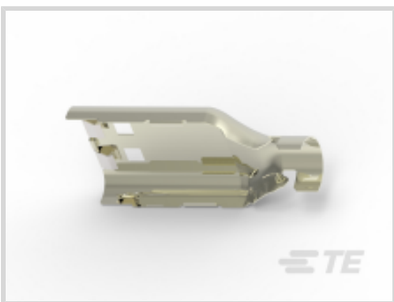

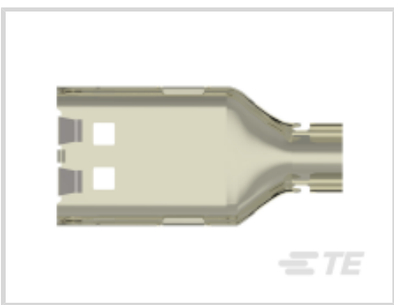

Connector Shielding Accessory Type: **Shield**

Primary Product Material: **Copper Alloy**

Features

Product Type Features

Connector Shielding Accessory Type	Shield

Body Features

Primary Product Material	Copper Alloy

Industry Standards

Industry Standard	LV215

Product Compliance

For compliance documentation, visit the product page on TE.com>

EU RoHS Directive 2011/65/EU	Compliant
EU ELV Directive 2000/53/EC	Compliant
China RoHS 2 Directive MIIT Order No 32, 2016	No Restricted Materials Above Threshold
EU REACH Regulation (EC) No. 1907/2006	Current ECHA Candidate List: JAN 2024 (240) Candidate List Declared Against: JUNE 2023 (235) Does not contain REACH SVHC
Halogen Content	Low Halogen - Br, Cl, F, I < 900 ppm per homogenous material. Also BFR/CFR/PVC Free

Solder Process Capability

Not reviewed for solder process capability

Product Compliance Disclaimer

This information is provided based on reasonable inquiry of our suppliers and represents our current actual knowledge based on the information they provided. This information is subject to change. The part numbers that TE has identified as EU RoHS compliant have a maximum concentration of 0.1% by weight in homogenous materials for lead, hexavalent chromium, mercury, PBB, PBDE, DBP, BBP, DEHP, DIBP, and 0.01% for cadmium, or qualify for an exemption to these limits as defined in the Annexes of Directive 2011/65/EU (RoHS2). Finished electrical and electronic equipment products will be CE marked as required by Directive 2011/65/EU. Components may not be CE marked. Additionally, the part numbers that TE has identified as EU ELV compliant have a maximum concentration of 0.1% by weight in homogenous materials for lead, hexavalent chromium, and mercury, and 0.01% for cadmium, or qualify for an exemption to these limits as defined in the Annexes of Directive 2000/53/EC (ELV). Regarding the REACH Regulation, the information TE provides on SVHC in articles for this part number is based on the latest European Chemicals Agency (ECHA) 'Guidance on requirements for substances in articles' posted at this URL: https://echa.europa.eu/guidance-documents/guidance-on-reach

Compatible Parts

TE Part # 4-2103015-5
PLUG SUBASSY, E, HVA280-2PHM F

TE Part # 4-2103015-2
PLUG SUBASSY, B, HVA280-2PHM F

TE Part # 4-2103015-4
PLUG SUBASSY, D, HVA280-2PHM F

TE Part # 4-2103015-1
PLUG SUBASSY, A, HVA280-2PHM F

TE Part # 4-2103015-6
PLUG SUBASSY, F, HVA280-2PHM F

TE Part # 7-2234130-7
CRIMP TOOLING KIT

Also in the Series | HVA 280

Automotive Connector Caps & Covers (5)

Automotive Connector EMC Shielding (15)

Automotive Housings(71)

Connector Seals & Cavity Plugs(8)

Electric, Hybrid & Fuel Cell Cable Assemblies(21)

High Voltage Wire Processing Equipment(7)

Other Automotive Connector Accessories(39)

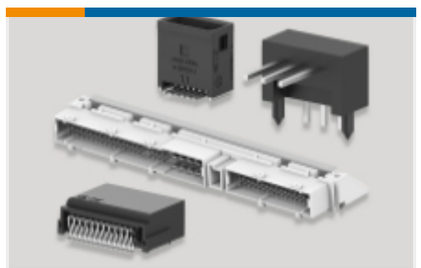

PCB Headers & Receptacles(32)

Customers Also Bought

TE Part # 2103013-1
CABLE SEAL RETAINER, SIZE 1, HVA280

TE Part # 1-968853-3
AMP MCP 2.8, CONTACT

TE Part # 5069876091
CGPT-19/9.5-0-25MM

TE Part # NB07666001
HTAT-24/6-0-50MM

TE Part # 4-2103015-2
PLUG SUBASSY, B, HVA280-2PHM F

TE Part # 2103157-1
SHIELD, PLUG, SIZE 1, Sn, HVA280

TE Part # 1587977-2
INNER HOUSING, PLUG, HVA280-2PHM, PASS T

TE Part # 2103155-1
COLLET, SIZE 1, HVA280

TE Part # 2103155-3
COLLET, SIZE 3, HVA280

TE Part # 2310222-1
CU ALLOY,INNER FERRULE,PCON12, 2P

Documents

Product Drawings

SHIELD, PLUG, SIZE 2, Ag, HVA280

English

CAD Files

3D PDF

3D

Customer View Model

ENG_CVM_CVM_1-2103157-2_A_c-1-2103157-2-a.2d_dxf.zip

English

Customer View Model

ENG_CVM_CVM_1-2103157-2_A_c-1-2103157-2-a.3d_igs.zip

English

Customer View Model

ENG_CVM_CVM_1-2103157-2_A_c-1-2103157-2-a.3d_stp.zip

English

By downloading the CAD file I accept and agree to the Terms and Conditionsof use.

Product Specifications

Application Specification

English

Application Specification

English

Application Specification

English