1-350715-1 ✔ ACTIVE

MATE-N-LOK | Universal MATE-N-LOK

TE Internal #: 1-350715-1

Rectangular Power Connectors, Housing, Plug, Wire-to-Wire / Wire-to-Board, 6 Position, 6.35 mm [.25 in] Centerline, Wire & Cable, Universal MATE-N-LOK

View on TE.com >

Connectors > Power Connectors > Rectangular Power > Rectangular Power Connectors

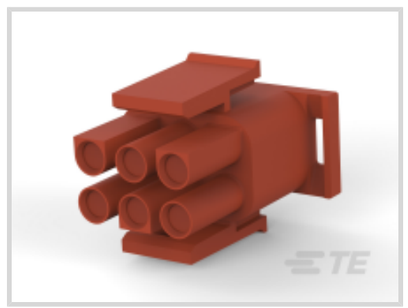


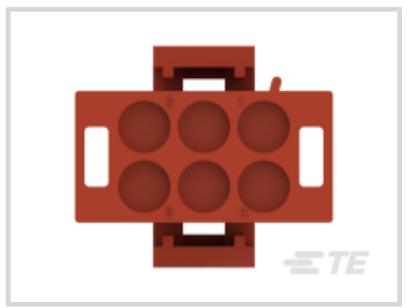


Rectangular Power Connector Type: **Housing**

Connector & Housing Type: **Plug**

Connector System: **Wire-to-Board, Wire-to-Wire**

Number of Positions: **6**

Centerline (Pitch): **6.35 mm [.25 in]**

Features

Product Type Features

Rectangular Power Connector Type	Housing
Connector & Housing Type	Plug
Connector System	Wire-to-Board, Wire-to-Wire
Sealable	No
Connector & Contact Terminates To	Wire & Cable

Configuration Features

Number of Positions	6
Number of Rows	2

Electrical Characteristics

Operating Voltage	600 VDC

Contact Features

Multiple Contact Types	Without
Contact Layout	Matrix
Contact Retention Within Housing	Without

Contact Type	Socket

Termination Features

Termination Method to Wire & Cable	Crimp

Mechanical Attachment

Connector Mounting Type	Cable Mount (Free-Hanging)

Housing Features

Centerline (Pitch)	6.35 mm[.25 in]
Housing Color	Brown
Housing Material	Nylon

Dimensions

Row-to-Row Spacing	6.35 mm[.25 in]

Usage Conditions

Operating Temperature Range	-55 - 105 °C[-67 - 221 °F]

Operation/Application

Circuit Application	Power & Signal

Industry Standards

CSA Rating	Certified, LR 16455
UL Rating	Recognized
Compatible With Agency/Standards Products	VDE
Compatible With Approved Standards Products	UL E28476
UL Flammability Rating	UL 94V-0
Glow Wire Rating	Standard Part - Not Glow Wire

Packaging Features

Packaging Quantity	1
Packaging Method	Package

Product Compliance

For compliance documentation, visit the product page on TE.com>

EU RoHS Directive 2011/65/EU	Compliant
EU ELV Directive 2000/53/EC	Compliant
China RoHS 2 Directive MIIT Order No 32, 2016	No Restricted Materials Above Threshold

EU REACH Regulation (EC) No. 1907/2006	Current ECHA Candidate List: JAN 2024 (240) Candidate List Declared Against: JAN 2024 (240) Does not contain REACH SVHC
Halogen Content	Low Halogen - Br, Cl, F, I < 900 ppm per homogenous material. Also BFR/CFR/PVC Free
Solder Process Capability	Not applicable for solder process capability

Product Compliance Disclaimer

This information is provided based on reasonable inquiry of our suppliers and represents our current actual knowledge based on the information they provided. This information is subject to change. The part numbers that TE has identified as EU RoHS compliant have a maximum concentration of 0.1% by weight in homogenous materials for lead, hexavalent chromium, mercury, PBB, PBDE, DBP, BBP, DEHP, DIBP, and 0.01% for cadmium, or qualify for an exemption to these limits as defined in the Annexes of Directive 2011/65/EU (RoHS2). Finished electrical and electronic equipment products will be CE marked as required by Directive 2011/65/EU. Components may not be CE marked. Additionally, the part numbers that TE has identified as EU ELV compliant have a maximum concentration of 0.1% by weight in homogenous materials for lead, hexavalent chromium, and mercury, and 0.01% for cadmium, or qualify for an exemption to these limits as defined in the Annexes of Directive 2000/53/EC (ELV). Regarding the REACH Regulation, the information TE provides on SVHC in articles for this part number is based on the latest European Chemicals Agency (ECHA) 'Guidance on requirements for substances in articles' posted at this URL: https://echa.europa.eu/guidance-documents/guidance-on-reach

Compatible Parts

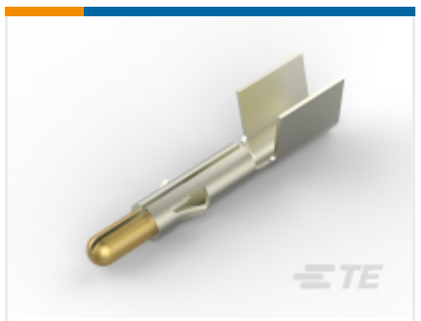

TE Part # 640309-6
UMNL PIN 12-10 AU/PHBZ

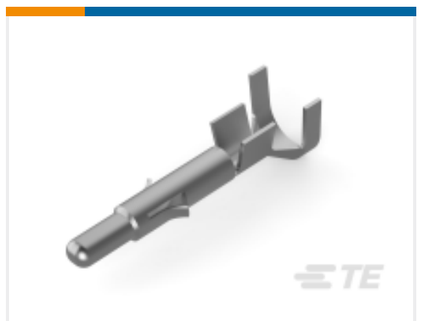

TE Part # 926902-3
UNIV-MNL SPLIT ST

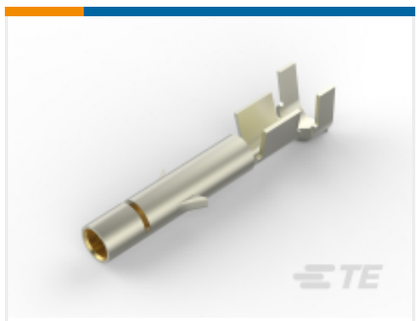

TE Part # 350550-7
UMNL SOK 20-14 AU/BR L/P



TE Part # 350690-3
UMNL PIN 24-18 PTPPHBZ L/P



TE Part # 350689-7
UMNL SOK 24-18 AUBR L/P

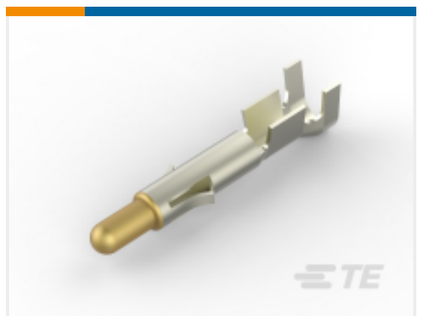

TE Part # 350547-7
UMNL PIN 20-14 AUBR L/P



TE Part # 350689-2
UMNL SOK 24-18 AUBR L/P



TE Part # 640310-3
UMNL SOK 12-10 PTPPHBZ



TE Part # 350689-3

UMNL SOK 24-18 PTPPHBZ L/P

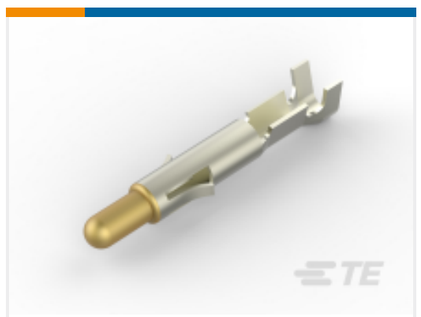

TE Part # 350690-7

UMNL PIN 24-18 AUBR L/P



TE Part # 350689-1

UMNL SOK 24-18 PTPBR L/P



TE Part # 926893-3

UNIV.M-N-L.SOCKET

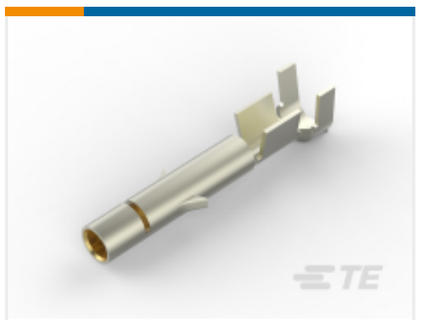

TE Part # 350550-6

UMNL SOK 20-14 AU/PHBZ L/P



TE Part # 350705-7

UMNL SPLIT PIN 20-14 AUBR L/P



TE Part # 350547-3

UMNL PIN 20-14 PTPPHBZ L/P



TE Part # 350551-7

UMNL SOK 20-14 AU/BR L/P

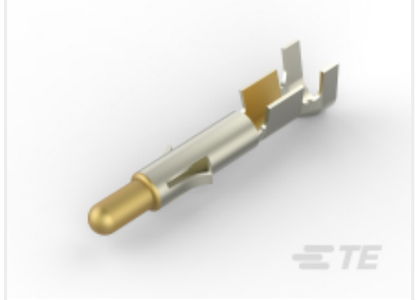

TE Part # 350547-2

UMNL PIN 20-14 AUBR L/P

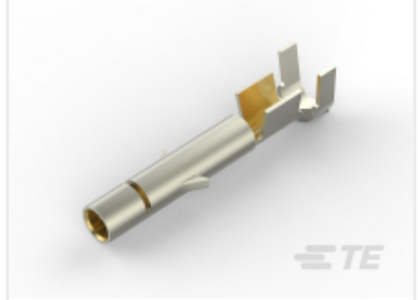

TE Part # 350550-2

UMNL SOK 20-14 AU/BR L/P



TE Part # 350550-3

UMNL SOK 20-14 PTPPHBZ L/P



TE Part # 770672-1

UMNL PIN 30-26 PTPBR L/P

Also in the Series | Universal MATE-N-LOK



Circular Power Connectors(2)



Connector Caps & Covers(34)



Connector Contacts(209)



Connector Hardware(12)



Connector Seals & Cavity Plugs(27)



Connector Strain Relief(7)



Insertion & Extraction Tools(4)



Rectangular Connector Housings(1)



Rectangular Power Connectors(671)



Standard Circular Connectors(1)

Customers Also Bought



TE Part # 177904-1
POWER D/LOCK PLUG HSG 10P



TE Part # 177914-2
AMP POWER DBL LOCK REC (S)



TE Part # 179609-1
AMP CT CRIMP TTYPE-2 REC CONT.



TE Part # 1-1437012-0
609-003=HDW IDC JCKSOCKET ASSY

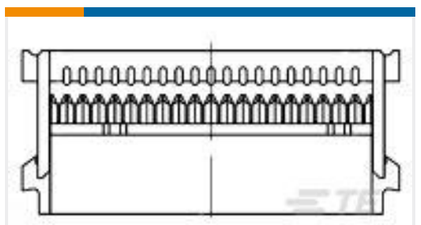

TE Part # 1658526-9
609-1441LF FEM SOCKT,LEAD FREE



TE Part # 926900-1
UNIV-MNL STIFT



TE Part # 794276-1
06P UMNL WIRE SEAL



TE Part # 63688-1
250 FASTON REC 18-14 AWG NPST

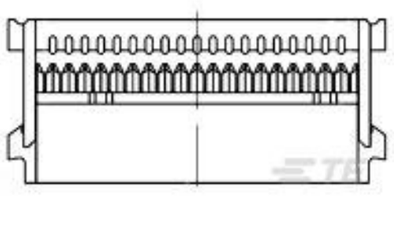

TE Part # 1-1658526-6
609-2641LF FEM SOCKT,LEAD FREE

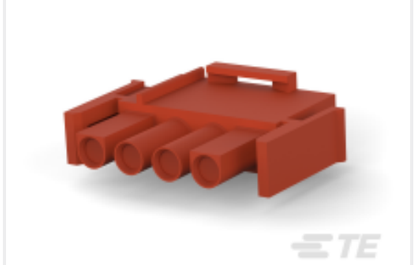

TE Part # 1-350779-1
04P UMNL V0 PLUG HSG BROWN

Documents

Product Drawings

06P UMNL V0 PLUG HSG BROWN

English

CAD Files

3D PDF

3D

Customer View Model

ENG_CVM_CVM_1-350715-1_BH.2d_dxf.zip

English

Customer View Model

ENG_CVM_CVM_1-350715-1_BH.3d_igs.zip

English

Customer View Model

ENG_CVM_CVM_1-350715-1_BH.3d_stp.zip

English

3D PDF

English

Customer View Model

ENG_CVM_1-350715-1_Y1.2d_dxf.zip

English

Customer View Model

ENG_CVM_1-350715-1_Y1.3d_igs.zip

English

Customer View Model

ENG_CVM_1-350715-1_Y1.3d_stp.zip

English

By downloading the CAD file I accept and agree to the Terms and Conditionsof use.

Datasheets & Catalog Pages

SOFT_SHELL_PIN_SOCKET_CONNECTORS_STANDARD_DENSITY

English

Product Specifications

Application Specification

English

Instruction Sheets

Instruction Sheet (U.S.)

English