Automotive Dual N-Channel 40 V (D-S) 175 °C MOSFET

PRODUCT SUMMARY	
V_{DS} (V)	40
$R_{DS(on)}$ (Ω) at V_{GS} = 10 V	0.033
$R_{DS(on)}$ (Ω) at V_{GS} = 4.5 V	0.039
I_D (A) per leg	15
Configuration	Dual
Package	PowerPAK SO-8L

FEATURES

- TrenchFET® power MOSFET
- AEC-Q101 qualified
- 100 % R_g and UIS tested
- Material categorization: for definitions of compliance please see www.vishay.com/doc?99912

AUTOMOTIVE GRADE

Pb-free

RoHS COMPLIANT

HALOGEN FREE

PowerPAK® SO-8L Dual

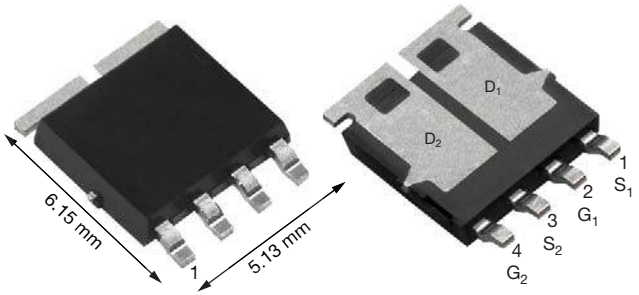

Top View Bottom View

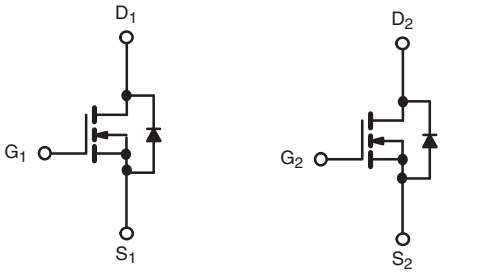

N-Channel MOSFET N-Channel MOSFET

ABSOLUTE MAXIMUM RATINGS (T_C = 25 °C, unless otherwise noted)				
PARAMETER		SYMBOL	LIMIT	UNIT
Drain-Source Voltage		V_{DS}	40	V
Gate-Source Voltage		V_{GS}	± 20	
Continuous Drain Current	T_C = 25 °C [a]	I_D	15	A
	T_C = 125 °C		11	
Continuous Source Current (Diode conduction) [a]		I_S	15	
Pulsed Drain Current [b]		I_{DM}	40	
Single Pulse Avalanche Current	L = 0.1 mH	I_{AS}	11	
Single Pulse Avalanche Energy		E_{AS}	6	mJ
Maximum Power Dissipation [b]	T_C = 25 °C	P_D	27	W
	T_C = 125 °C		9	
Operating Junction and Storage Temperature Range		T_J, T_{stg}	-55 to +175	°C
Soldering Recommendations (Peak temperature) [d, e]			260	

THERMAL RESISTANCE RATINGS				
PARAMETER		SYMBOL	LIMIT	UNIT
Junction-to-Ambient	PCB mount [c]	R_{thJA}	85	°C/W
Junction-to-Case (Drain)		R_{thJC}	5.5	

Notes

a. Package limited.
b. Pulse test; pulse width ≤ 300 µs, duty cycle ≤ 2 %.
c. When mounted on 1" square PCB (FR4 material).
d. See solder profile (www.vishay.com/doc?73257). The PowerPAK SO-8L is a leadless package. The end of the lead terminal is exposed copper (not plated) as a result of the singulation process in manufacturing. A solder fillet at the exposed copper tip cannot be guaranteed and is not required to ensure adequate bottom side solder interconnection.
e. Rework conditions: manual soldering with a soldering iron is not recommended for leadless components.

For technical questions, contact: automostechsupport@vishay.com

THIS DOCUMENT IS SUBJECT TO CHANGE WITHOUT NOTICE. THE PRODUCTS DESCRIBED HEREIN AND THIS DOCUMENT ARE SUBJECT TO SPECIFIC DISCLAIMERS, SET FORTH AT www.vishay.com/doc?91000

SPECIFICATIONS (T_C = 25 °C, unless otherwise noted)							
PARAMETER	**SYMBOL**	**TEST CONDITIONS**		**MIN.**	**TYP.**	**MAX.**	**UNIT**
Static							
Drain-Source Breakdown Voltage	V_{DS}	V_{GS} = 0 V, I_D = 250 µA		40	-	-	V
Gate-Source Threshold Voltage	$V_{GS(th)}$	V_{DS} = V_{GS}, I_D = 250 µA		1.5	2.0	2.5	
Gate-Source Leakage	I_{GSS}	V_{DS} = 0 V, V_{GS} = ± 20 V		-	-	± 100	nA
Zero Gate Voltage Drain Current	I_{DSS}	V_{GS} = 0 V	V_{DS} = 40 V	-	-	1	µA
		V_{GS} = 0 V	V_{DS} = 40 V, T_J = 125 °C	-	-	50	
		V_{GS} = 0 V	V_{DS} = 40 V, T_J = 175 °C	-	-	150	
On-State Drain Current [a]	$I_{D(on)}$	V_{GS} = 10 V	V_{DS} ≥ 5 V	10	-	-	A
Drain-Source On-State Resistance [a]	$R_{DS(on)}$	V_{GS} = 10 V	I_D = 7 A	-	0.027	0.033	Ω
		V_{GS} = 10 V	I_D = 7 A, T_J = 125 °C	-	-	0.056	
		V_{GS} = 10 V	I_D = 7 A, T_J = 175 °C	-	-	0.070	
		V_{GS} = 4.5 V	I_D = 4 A	-	0.032	0.039	
Forward Transconductance [b]	g_{fs}	V_{DS} = 15 V, I_D = 5 A		-	29	-	S
Dynamic [b]							
Input Capacitance	C_{iss}	V_{GS} = 0 V	V_{DS} = 25 V, f = 1 MHz	-	395	600	pF
Output Capacitance	C_{oss}			-	60	85	
Reverse Transfer Capacitance	C_{rss}			-	25	40	
Total Gate Charge [c]	Q_g	V_{GS} = 10 V	V_{DS} = 20 V, I_D = 4 A	-	10	20	nC
Gate-Source Charge [c]	Q_{gs}			-	1.4	-	
Gate-Drain Charge [c]	Q_{gd}			-	2.2	-	
Gate Resistance	R_g	f = 1 MHz		2	4.2	6.5	Ω
Turn-On Delay Time [c]	$t_{d(on)}$	V_{DD} = 20 V, R_L = 5 Ω I_D ≅ 4 A, V_{GEN} = 10 V, R_g = 1 Ω		-	7	15	ns
Rise Time [c]	t_r			-	3	10	
Turn-Off Delay Time [c]	$t_{d(off)}$			-	14	30	
Fall Time [c]	t_f			-	2	5	
Source-Drain Diode Ratings and Characteristics [b]							
Pulsed Current [a]	I_{SM}			-	-	40	A
Forward Voltage	V_{SD}	I_F = 7 A, V_{GS} = 0 V		-	0.88	1.2	V

Notes

a. Pulse test; pulse width ≤ 300 µs, duty cycle ≤ 2 %.
b. Guaranteed by design, not subject to production testing.
c. Independent of operating temperature.

Stresses beyond those listed under "Absolute Maximum Ratings" may cause permanent damage to the device. These are stress ratings only, and functional operation of the device at these or any other conditions beyond those indicated in the operational sections of the specifications is not implied. Exposure to absolute maximum rating conditions for extended periods may affect device reliability.

For technical questions, contact: automostechsupport@vishay.com
THIS DOCUMENT IS SUBJECT TO CHANGE WITHOUT NOTICE. THE PRODUCTS DESCRIBED HEREIN AND THIS DOCUMENT ARE SUBJECT TO SPECIFIC DISCLAIMERS, SET FORTH AT www.vishay.com/doc?91000

TYPICAL CHARACTERISTICS (T_A = 25 °C, unless otherwise noted)

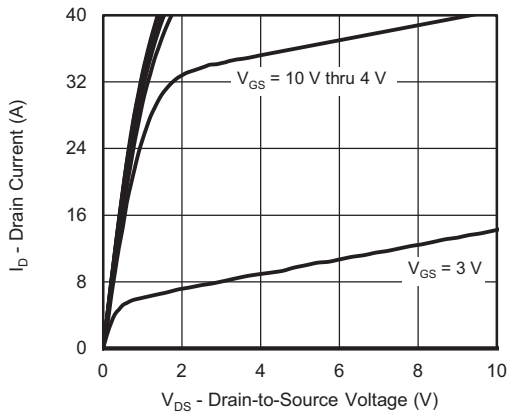

Output Characteristics

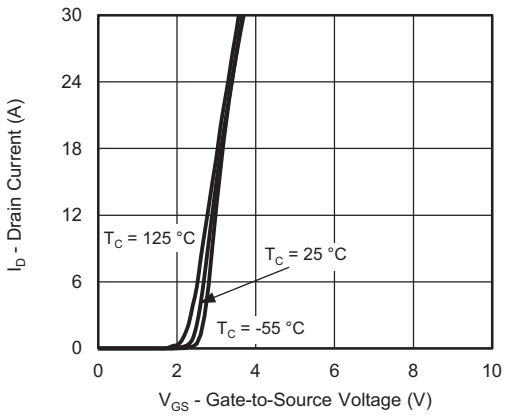

Transfer Characteristics

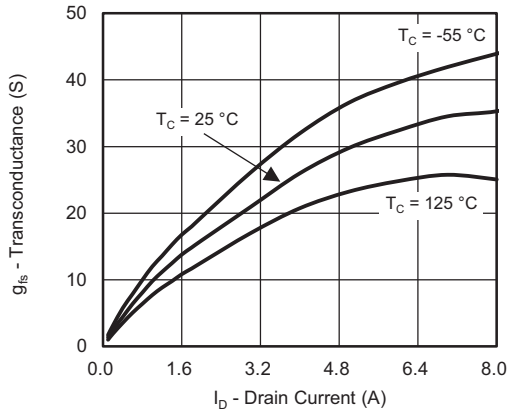

Transconductance

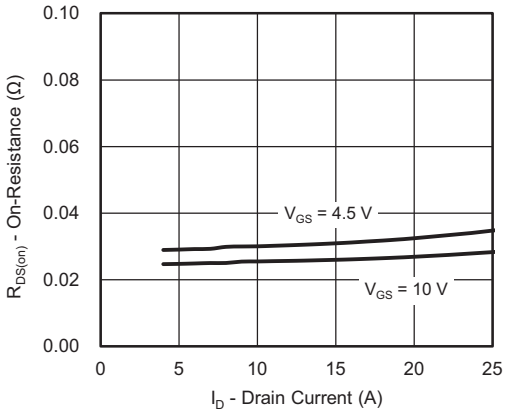

On-Resistance vs. Drain Current

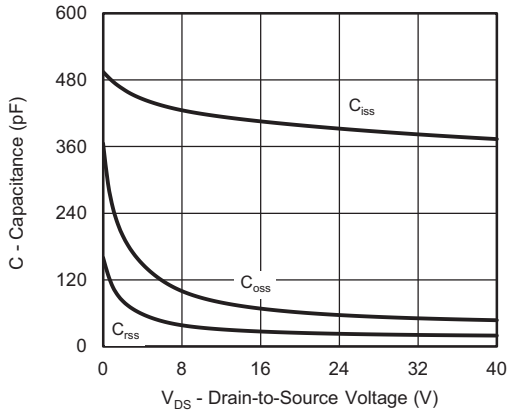

Capacitance

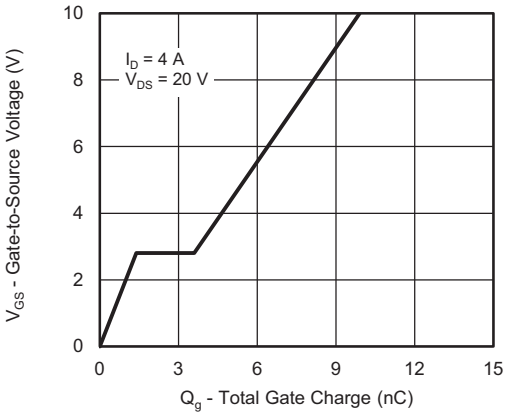

Gate Charge

For technical questions, contact: automostechsupport@vishay.com
THIS DOCUMENT IS SUBJECT TO CHANGE WITHOUT NOTICE. THE PRODUCTS DESCRIBED HEREIN AND THIS DOCUMENT ARE SUBJECT TO SPECIFIC DISCLAIMERS, SET FORTH AT www.vishay.com/doc?91000

TYPICAL CHARACTERISTICS (T_A = 25 °C, unless otherwise noted)

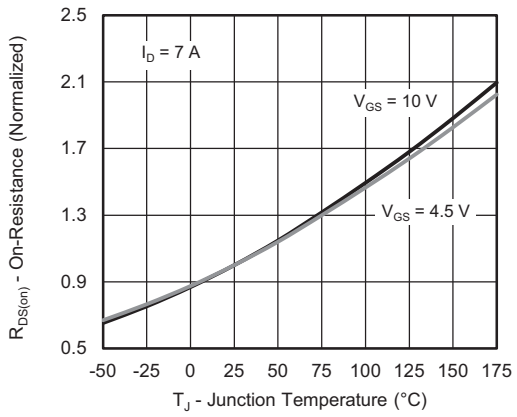

On-Resistance vs. Junction Temperature

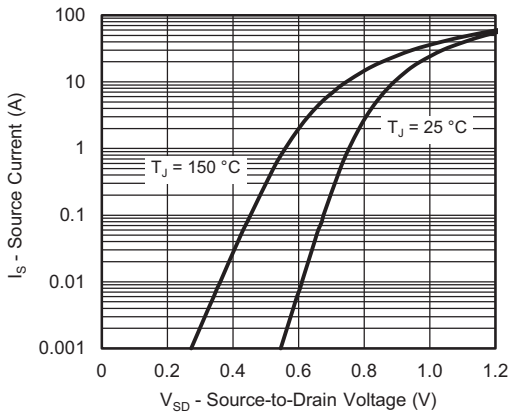

Source Drain Diode Forward Voltage

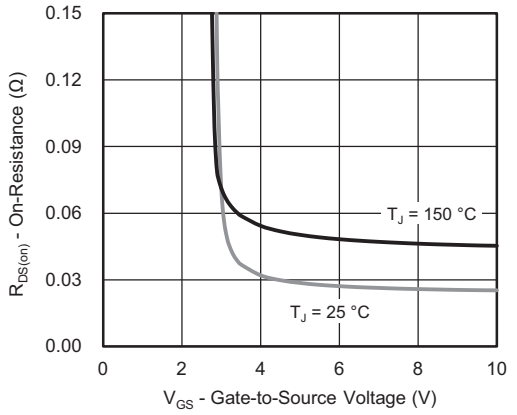

On-Resistance vs. Gate-to-Source Voltage

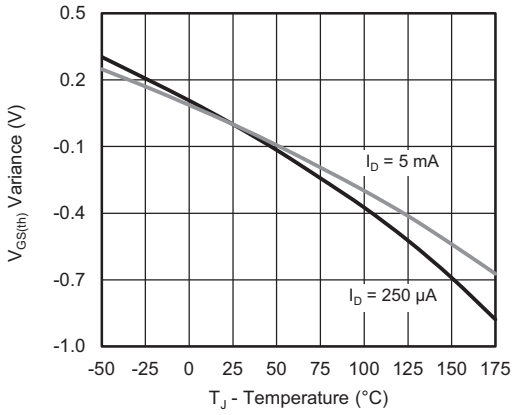

Threshold Voltage

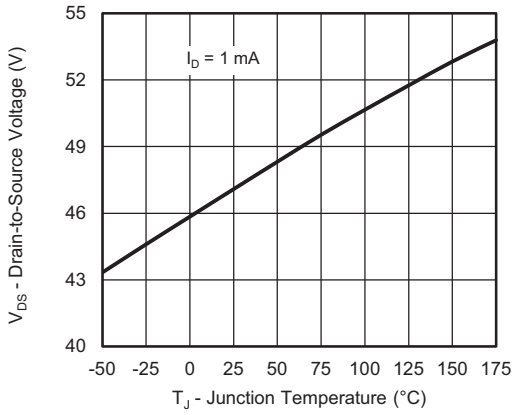

Drain Source Breakdown vs. Junction Temperature

For technical questions, contact: automostechsupport@vishay.com
THIS DOCUMENT IS SUBJECT TO CHANGE WITHOUT NOTICE. THE PRODUCTS DESCRIBED HEREIN AND THIS DOCUMENT ARE SUBJECT TO SPECIFIC DISCLAIMERS, SET FORTH AT www.vishay.com/doc?91000

THERMAL RATINGS (T_A = 25 °C, unless otherwise noted)

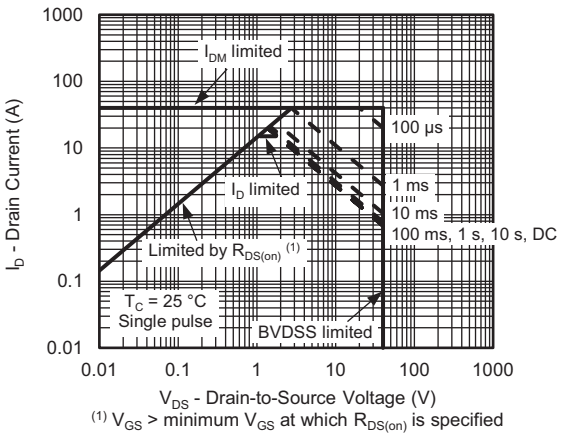

Safe Operating Area

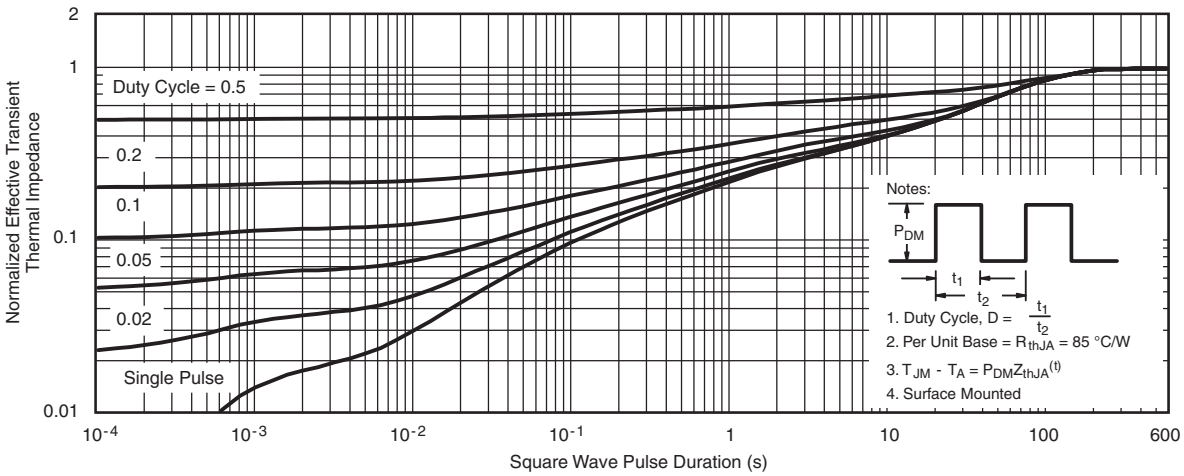

Normalized Thermal Transient Impedance, Junction-to-Ambient

For technical questions, contact: automostechsupport@vishay.com
THIS DOCUMENT IS SUBJECT TO CHANGE WITHOUT NOTICE. THE PRODUCTS DESCRIBED HEREIN AND THIS DOCUMENT ARE SUBJECT TO SPECIFIC DISCLAIMERS, SET FORTH AT www.vishay.com/doc?91000

THERMAL RATINGS (T_A = 25 °C, unless otherwise noted)

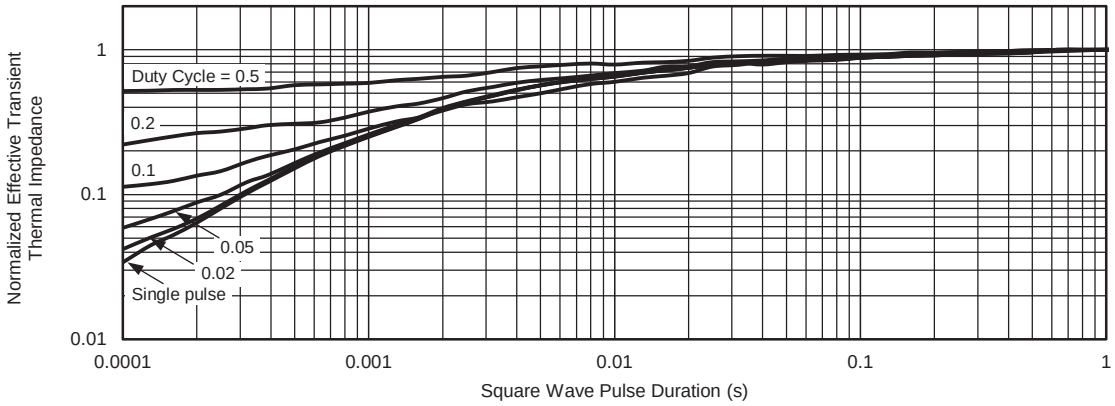

Normalized Thermal Transient Impedance, Junction-to-Case

Note

- The characteristics shown in the two graphs
  - Normalized Transient Thermal Impedance Junction-to-Ambient (25 °C)
  - Normalized Transient Thermal Impedance Junction-to-Case (25 °C)

  are given for general guidelines only to enable the user to get a “ball park” indication of part capabilities. The data are extracted from single pulse transient thermal impedance characteristics which are developed from empirical measurements. The latter is valid for the part mounted on printed circuit board - FR4, size 1" x 1" x 0.062", double sided with 2 oz. copper, 100 % on both sides. The part capabilities can widely vary depending on actual application parameters and operating conditions.

Vishay Siliconix maintains worldwide manufacturing capability. Products may be manufactured at one of several qualified locations. Reliability data for Silicon Technology and Package Reliability represent a composite of all qualified locations. For related documents such as package/tape drawings, part marking, and reliability data, see www.vishay.com/ppg?75159.

For technical questions, contact: automostechsupport@vishay.com

THIS DOCUMENT IS SUBJECT TO CHANGE WITHOUT NOTICE. THE PRODUCTS DESCRIBED HEREIN AND THIS DOCUMENT ARE SUBJECT TO SPECIFIC DISCLAIMERS, SET FORTH AT www.vishay.com/doc?91000

PowerPAK® SO-8L Case Outline 2

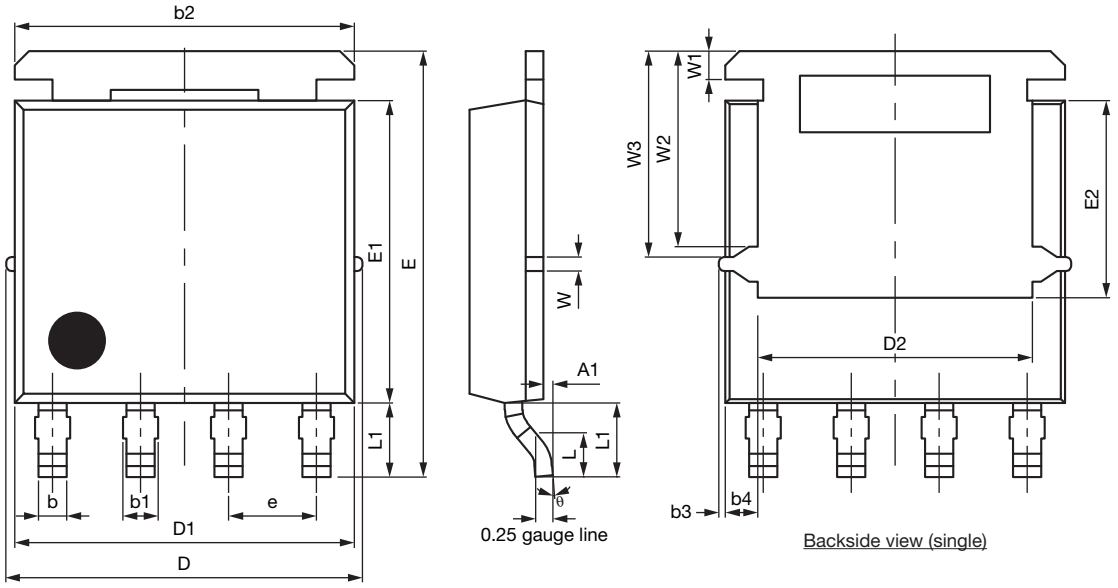

Topside view (single)

Backside view (single)

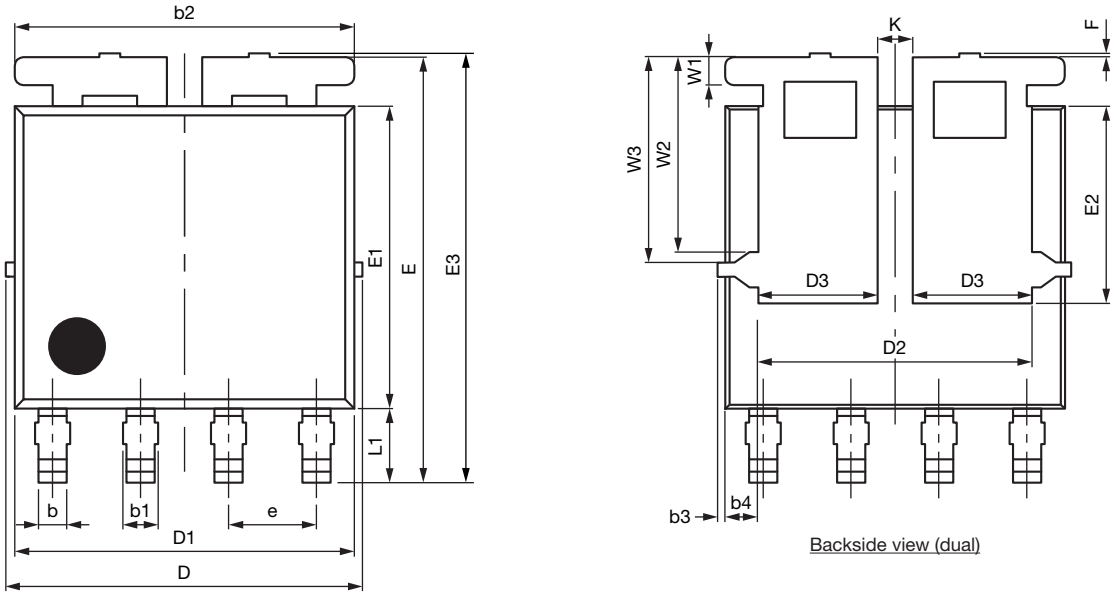

Topside view (dual)

Backside view (dual)

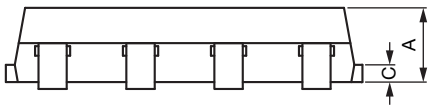

For technical questions, contact: pmostechsupport@vishay.com

THIS DOCUMENT IS SUBJECT TO CHANGE WITHOUT NOTICE. THE PRODUCTS DESCRIBED HEREIN AND THIS DOCUMENT ARE SUBJECT TO SPECIFIC DISCLAIMERS, SET FORTH AT www.vishay.com/doc?91000

DIM.	MILLIMETERS			INCHES		
	MIN.	NOM.	MAX.	MIN.	NOM.	MAX.
A	1.00	1.07	1.14	0.039	0.042	0.045
A1	0.00	-	0.127	0.00	-	0.005
b	0.33	0.41	0.48	0.013	0.016	0.019
b1	0.44	0.51	0.58	0.017	0.020	0.023
b2	4.80	4.90	5.00	0.189	0.193	0.197
b3	0.094			0.004		
b4	0.47			0.019		
c	0.20	0.25	0.30	0.008	0.010	0.012
D	5.00	5.13	5.25	0.197	0.202	0.207
D1	4.80	4.90	5.00	0.189	0.193	0.197
D2	3.86	3.96	4.06	0.152	0.156	0.160
D3	1.63	1.73	1.83	0.064	0.068	0.072
e	1.27 BSC			0.050 BSC		
E	6.05	6.15	6.25	0.238	0.242	0.246
E1	4.27	4.37	4.47	0.168	0.172	0.176
E2	2.75	2.85	2.95	0.108	0.112	0.116
E3	6.05	6.22	6.40	0.238	0.245	0.252
F	-	-	0.15	-	-	0.006
L	0.62	0.72	0.82	0.024	0.028	0.032
L1	0.92	1.07	1.22	0.036	0.042	0.048
K	0.51			0.020		
W	0.23			0.009		
W1	0.41			0.016		
W2	2.82			0.111		
W3	2.96			0.117		
θ	0°	-	10°	0°	-	10°
ECN: C23-1026-Rev. D, 25-Sep-2023 DWG: 6044						

Note

- Millimeters will govern

For technical questions, contact: pmostechsupport@vishay.com

THIS DOCUMENT IS SUBJECT TO CHANGE WITHOUT NOTICE. THE PRODUCTS DESCRIBED HEREIN AND THIS DOCUMENT ARE SUBJECT TO SPECIFIC DISCLAIMERS, SET FORTH AT www.vishay.com/doc?91000

RECOMMENDED MINIMUM PAD FOR PowerPAK® SO-8L DUAL

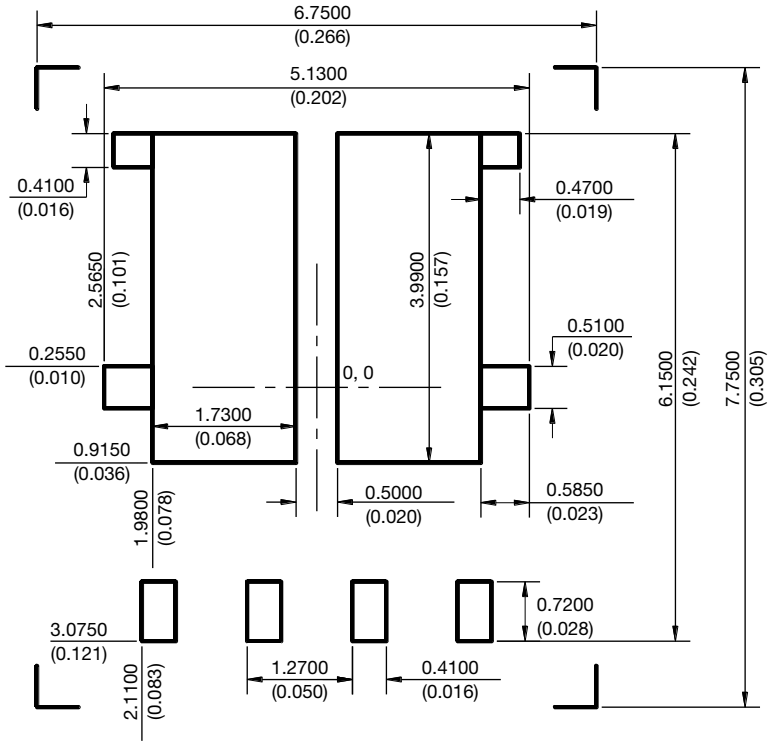

Recommended Minimum Pads
Dimensions in mm (inches)
Keep-out 6.75 (0.266) x 7.75 (0.305)

THIS DOCUMENT IS SUBJECT TO CHANGE WITHOUT NOTICE. THE PRODUCTS DESCRIBED HEREIN AND THIS DOCUMENT ARE SUBJECT TO SPECIFIC DISCLAIMERS, SET FORTH AT www.vishay.com/doc?91000

Disclaimer

ALL PRODUCT, PRODUCT SPECIFICATIONS AND DATA ARE SUBJECT TO CHANGE WITHOUT NOTICE TO IMPROVE RELIABILITY, FUNCTION OR DESIGN OR OTHERWISE.

Vishay Intertechnology, Inc., its affiliates, agents, and employees, and all persons acting on its or their behalf (collectively, “Vishay”), disclaim any and all liability for any errors, inaccuracies or incompleteness contained in any datasheet or in any other disclosure relating to any product.

Vishay makes no warranty, representation or guarantee regarding the suitability of the products for any particular purpose or the continuing production of any product. To the maximum extent permitted by applicable law, Vishay disclaims (i) any and all liability arising out of the application or use of any product, (ii) any and all liability, including without limitation special, consequential or incidental damages, and (iii) any and all implied warranties, including warranties of fitness for particular purpose, non-infringement and merchantability.

Statements regarding the suitability of products for certain types of applications are based on Vishay's knowledge of typical requirements that are often placed on Vishay products in generic applications. Such statements are not binding statements about the suitability of products for a particular application. It is the customer's responsibility to validate that a particular product with the properties described in the product specification is suitable for use in a particular application. Parameters provided in datasheets and / or specifications may vary in different applications and performance may vary over time. All operating parameters, including typical parameters, must be validated for each customer application by the customer's technical experts. Product specifications do not expand or otherwise modify Vishay's terms and conditions of purchase, including but not limited to the warranty expressed therein.

Hyperlinks included in this datasheet may direct users to third-party websites. These links are provided as a convenience and for informational purposes only. Inclusion of these hyperlinks does not constitute an endorsement or an approval by Vishay of any of the products, services or opinions of the corporation, organization or individual associated with the third-party website. Vishay disclaims any and all liability and bears no responsibility for the accuracy, legality or content of the third-party website or for that of subsequent links.

Except as expressly indicated in writing, Vishay products are not designed for use in medical, life-saving, or life-sustaining applications or for any other application in which the failure of the Vishay product could result in personal injury or death. Customers using or selling Vishay products not expressly indicated for use in such applications do so at their own risk. Please contact authorized Vishay personnel to obtain written terms and conditions regarding products designed for such applications.

No license, express or implied, by estoppel or otherwise, to any intellectual property rights is granted by this document or by any conduct of Vishay. Product names and markings noted herein may be trademarks of their respective owners.

© 2024 VISHAY INTERTECHNOLOGY, INC. ALL RIGHTS RESERVED