Power Metal Strip® Resistors, Low Value (Down to 0.0001 Ω), Surface-Mount

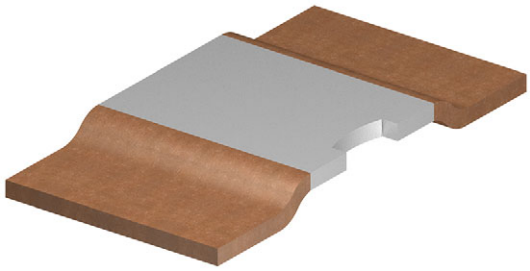

LINKS TO ADDITIONAL RESOURCES

3D Models | Design Tools | Upgrade Performance | Calculators

FEATURES

- All welded construction of the Power Metal Strip® resistors are ideal for all types of current sensing, voltage division and pulse applications
- Proprietary processing technique produces extremely low resistance values, down to 0.0001 Ω
- Sulfur resistance by construction that is unaffected by high sulfur environments
- Solid metal iron-chrome or manganese-copper alloy resistive element with low TCR (< 20 ppm/°C)
- Very low inductance 0.5 nH to 5 nH
- Low thermal EMF (< 3 µV/°C)
- AEC-Q200 qualified (1)
- Material categorization: for definitions of compliance please see www.vishay.com/doc?99912

AUTOMOTIVE GRADE

Pb-free

RoHS COMPLIANT

HALOGEN FREE GREEN (5-2008)

Note

(1) Flame retardance test may not be applicable to some resistor technologies

STANDARD ELECTRICAL SPECIFICATIONS

GLOBAL MODEL	SIZE	POWER RATING $P_{70\,°C}$ W	TOLERANCE %	RESISTANCE VALUE RANGE Ω	RESISTANCE VALUES CURRENTLY AVAILABLE (1) Ω	WEIGHT (typical) g/1000 pieces
WSL3921	3921	3.0	1.0, 5.0	0.1m to 4m	0.1m, 0.2m, 0.3m, 0.4m, 0.5m, 0.7m, 1m, 1.5m, 2m, 2.5m, 3m, 4m	281
WSL5931	5931	5.0	1.0, 5.0	2m to 3m	2m, 3m	398
		5.0	1.0, 5.0	0.1m to 1m	0.1m, 0.2m, 0.3m, 0.5m, 1m	1253

Notes

- Qualified to AEC-Q200 rev. D

(1) Other values may be available, contact factory

GLOBAL PART NUMBER INFORMATION

Global Part Numbering: WSL3921L5000FEA (WSL3921, 0.0005 Ω, ± 1 %)
(visit www.vishay.net Vishay Dale parts numbering manual for all options)

W	S	L	3	9	2	1	L	5	0	0	0	F	E	A		

GLOBAL MODEL (7 digits)	RESISTANCE VALUE (1) (5 digits)	TOLERANCE CODE (1 digit)	PACKAGING CODE (2) (2 digits)	SPECIAL (3) (up to 2 digits)
WSL3921 **WSL5931**	**L** = mΩ **L5000** = 0.0005 Ω	**F** = ± 1.0 % **J** = ± 5.0 %	**EA** = lead (Pb)-free, tape/reel	(dash number) (up to 2 digits) from **1 to 99** as applicable

Notes

(1) WSL marking (www.vishay.com/doc?30327)

(2) Packaging code: EB (lead (Pb)-free) is a non-standard packaging code that designates a 1000 piece reel size. The non-standard packaging code is identical to our standard EA (lead (Pb)-free) packaged code, except that it has a package quantity of 1000 pieces

(3) Follow link for customization capabilities: www.vishay.com/doc?48163

For technical questions, contact: ww2bresistors@vishay.com

THIS DOCUMENT IS SUBJECT TO CHANGE WITHOUT NOTICE. THE PRODUCTS DESCRIBED HEREIN AND THIS DOCUMENT ARE SUBJECT TO SPECIFIC DISCLAIMERS, SET FORTH AT www.vishay.com/doc?91000

TECHNICAL SPECIFICATIONS

PARAMETER	UNIT	RESISTOR CHARACTERISTICS	
		WSL3921	WSL5931
Component temperature coefficient (including terminal) (1) TCR measured from -55 °C to 150 °C	ppm/°C	± 350 for 0.1 mΩ	+300 for 0.1 mΩ (+25 °C to +170 °C)
		± 150 for 0.2 mΩ	± 225 for 0.2 mΩ
		± 170 for 0.3 mΩ and 0.4 mΩ	± 175 for 0.3 mΩ and 0.5 mΩ
		± 150 for 0.5 mΩ to 1 mΩ	± 75 for 1 mΩ to 3 mΩ
		± 50 for 1.5 mΩ to 4 mΩ	-
Element TCR (2)	ppm/°C	< 20	
Operating temperature range	°C	-65 to +170	
Maximum working voltage (3)	V	$(P \times R)^{1/2}$	

Notes

- Consult factory for detailed TCR performance across full temperature range as performance is resistance value specific

(1) Component TCR - total TCR that includes the TCR effects of the resistor element and the copper terminal

(2) Element TCR - only applies to the alloy used for the resistor element; refer to item 1 in the construction illustration on the following page

(3) Maximum working voltage - the WSL is not voltage sensitive, but is limited by power / energy dissipation and is also not ESD sensitive

DIMENSIONS in inches (millimeters)

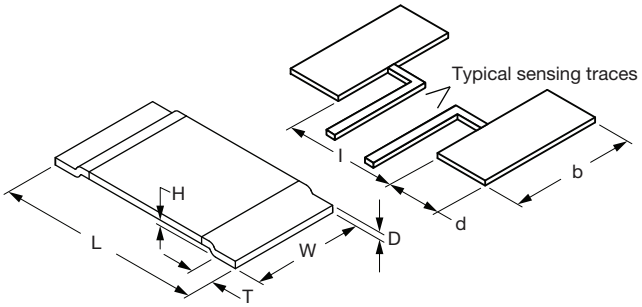

CONSTRUCTION OUTLINE

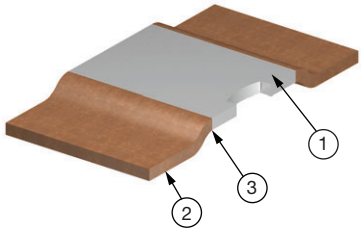

1. Resistive element: refer to table below for element material
2. Terminal: solid copper
3. Terminal / element weld

Notes

- 3D models available: 3921 model www.vishay.com/doc?30315; 5931 model www.vishay.com/doc?30317
- Surface mount solder profile recommendations: www.vishay.com/doc?31052

MODEL	DIMENSIONS in inches (millimeters)				SOLDER PAD DIMENSIONS in inches (millimeters)		
	L	W	H (1)	T	d	b	l
WSL3921	0.394 ± 0.010 (10.0 ± 0.254)	0.205 ± 0.015 (5.20 ± 0.381)	0.020 (0.5)	0.080 ± 0.010 (2.00 ± 0.254)	0.106 ± 0.010 (2.70 ± 0.254)	0.244 ± 0.010 (6.20 ± 0.254)	0.220 ± 0.005 (5.60 ± 0.13)
WSL3921 (0.1 mΩ only)				0.130 ± 0.010 (3.30 ± 0.254)	0.156 ± 0.010 (3.96 ± 0.254)		0.148 ± 0.005 (3.76 ± 0.13)
WSL5931	0.591 ± 0.010 (15.0 ± 0.254)	0.305 ± 0.015 (7.75 ± 0.381)	0.020 (0.5)	0.157 ± 0.010 (4.00 ± 0.254)	0.205 ± 0.010 (5.20 ± 0.254)	0.344 ± 0.010 (8.75 ± 0.254)	0.220 ± 0.005 (5.60 ± 0.13)

Note

(1) H dimension is reference only. Total height is H dimension + D thickness ± 0.010" (± 0.254 mm)

For technical questions, contact: ww2bresistors@vishay.com

THIS DOCUMENT IS SUBJECT TO CHANGE WITHOUT NOTICE. THE PRODUCTS DESCRIBED HEREIN AND THIS DOCUMENT ARE SUBJECT TO SPECIFIC DISCLAIMERS, SET FORTH AT www.vishay.com/doc?91000

GLOBAL MODEL	RESISTANCE VALUE (mΩ)	TYPICAL THERMAL RESISTANCE (°C/W) (1)	"D" THICKNESS (INCHES)	ELEMENT MATERIAL
WSL3921	0.1	0.9	0.0560	Mn-Cu-Sn
WSL3921	0.2	2.7	0.0560	Mn-Cu-Sn
WSL3921	0.3	3.8	0.0510	Mn-Cu
WSL3921	0.4	4.3	0.0350	Mn-Cu
WSL3921	0.5	5.8	0.0300	Mn-Cu
WSL3921	0.7	6.3	0.0205	Mn-Cu
WSL3921	1.0	10.9	0.0150	Mn-Cu
WSL3921	1.5	8.3	0.0360	Fe-Cr
WSL3921	2.0	12.0	0.0270	Fe-Cr
WSL3921	3.0	20.7	0.0170	Fe-Cr
WSL3921	4.0	22.8	0.0130	Fe-Cr
WSL5931	0.1	1.6	0.0560	Mn-Cu-Sn
WSL5931	0.2	2.4	0.0485	Mn-Cu
WSL5931	0.3	3.5	0.0300	Mn-Cu
WSL5931	0.5	5.7	0.0180	Mn-Cu
WSL5931	1.0	7.2	0.0330	Fe-Cr
WSL5931	2.0	13.2	0.0155	Fe-Cr
WSL5931	3.0	19.3	0.0105	Fe-Cr

Note

(1) The full power rating of power metal strip resistors are dependent upon the ability of the circuit board to dissipate the heat energy created in the resistance element. It is recommended to follow common design practices for power semiconductors that ensure the junction temperature is maintained with in thermal limits by using large pad surfaces, thermal vias, heavier copper weights, internal layers as well as other thermal spreading features. The thermal resistance values provided function in the same manner as junction to terminal temperature

DERATING - AMBIENT TEMPERATURE

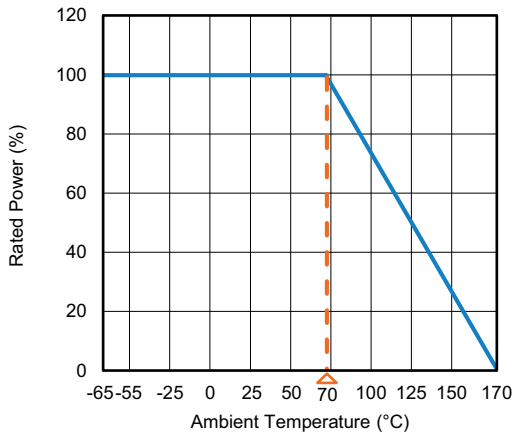

DERATING - TERMINAL TEMPERATURE

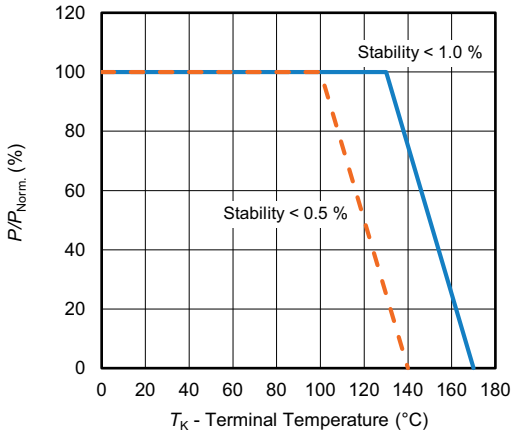

PULSE CAPABILITY

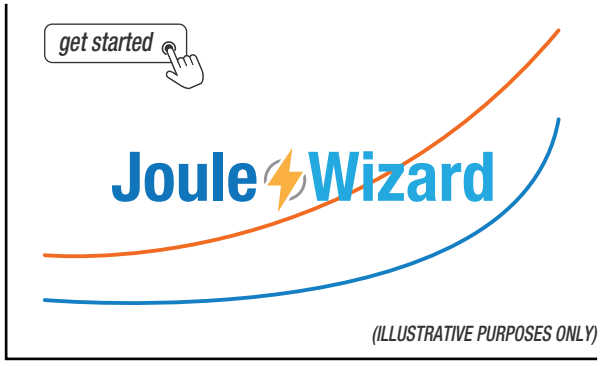

www.vishay.com/en/resistors/joulewizard/

For technical questions, contact: ww2bresistors@vishay.com

THIS DOCUMENT IS SUBJECT TO CHANGE WITHOUT NOTICE. THE PRODUCTS DESCRIBED HEREIN AND THIS DOCUMENT ARE SUBJECT TO SPECIFIC DISCLAIMERS, SET FORTH AT www.vishay.com/doc?91000

PERFORMANCE		
TEST	**CONDITIONS OF TEST**	**TEST LIMITS**
Thermal shock	-55 °C to +150 °C, 1000 cycles, 15 min at each extreme	± 1.0 %
Short time overload	Refer to link for short time overload performance and pulse capability; www.vishay.com/en/resistors/power-metal-strip-calculator/	± 0.5 %
Low temperature storage	-65 °C for 24 h	± 0.5 %
High temperature exposure	1000 h at +170 °C	± 1.0 %
Bias humidity	+85 °C, 85 % RH, 10 % bias, 1000 h	± 0.5 %
Mechanical shock	100 *g*'s for 6 ms, 5 pulses	± 0.5 %
Vibration	Frequency varied 10 Hz to 2000 Hz in 1 min, 3 directions, 12 h	± 0.5 %
Load life	1000 h at +70 °C, 1.5 h "ON", 0.5 h "OFF"	± 1.0 %
Resistance to solder heat	3 x at 250 °C ± 5 °C for 30 s ± 5 s	± 0.5 %
Moisture resistance	MIL-STD-202, method 106, 0 % power, 7a and 7b not required	± 0.5 %

Note

- Contact ww2bresistors@vishay.com for application specific performance requirements. Typical performance is better than stated test limits

PACKAGING				
MODEL	**REEL**			
	TAPE WIDTH	**DIAMETER**	**PIECES/REEL**	**CODE**
WSL3921	16 mm / embossed plastic	330 mm / 13"	3000	EA
WSL5931	24 mm / embossed plastic	330 mm / 13"	1500	EA

Notes

- Embossed carrier tape per EIA-481

(1) Additional packaging details at www.vishay.com/doc?20051

LINKS TO RELATED DOCUMENTS	
SELECTOR GUIDE	
Overview of Automotive Grade Products	www.vishay.com/doc?49924
TECHNICAL NOTES	
SMD Current Sense: AEC-Q200 vs. Vishay Qualification	www.vishay.com/doc?30416
MIL-PRF vs. AEC-Q200: Do You Know What You Are Getting?	www.vishay.com/doc?11000
WHITE PAPER	
Thermal Management for Surface-Mount Devices	www.vishay.com/doc?30380
Temperature Coefficient of Resistance for Current Sensing	www.vishay.com/doc?30405

For technical questions, contact: ww2bresistors@vishay.com

THIS DOCUMENT IS SUBJECT TO CHANGE WITHOUT NOTICE. THE PRODUCTS DESCRIBED HEREIN AND THIS DOCUMENT ARE SUBJECT TO SPECIFIC DISCLAIMERS, SET FORTH AT www.vishay.com/doc?91000

Disclaimer

ALL PRODUCT, PRODUCT SPECIFICATIONS AND DATA ARE SUBJECT TO CHANGE WITHOUT NOTICE TO IMPROVE RELIABILITY, FUNCTION OR DESIGN OR OTHERWISE.

Vishay Intertechnology, Inc., its affiliates, agents, and employees, and all persons acting on its or their behalf (collectively, “Vishay”), disclaim any and all liability for any errors, inaccuracies or incompleteness contained in any datasheet or in any other disclosure relating to any product.

Vishay makes no warranty, representation or guarantee regarding the suitability of the products for any particular purpose or the continuing production of any product. To the maximum extent permitted by applicable law, Vishay disclaims (i) any and all liability arising out of the application or use of any product, (ii) any and all liability, including without limitation special, consequential or incidental damages, and (iii) any and all implied warranties, including warranties of fitness for particular purpose, non-infringement and merchantability.

Statements regarding the suitability of products for certain types of applications are based on Vishay's knowledge of typical requirements that are often placed on Vishay products in generic applications. Such statements are not binding statements about the suitability of products for a particular application. It is the customer's responsibility to validate that a particular product with the properties described in the product specification is suitable for use in a particular application. Parameters provided in datasheets and / or specifications may vary in different applications and performance may vary over time. All operating parameters, including typical parameters, must be validated for each customer application by the customer's technical experts. Product specifications do not expand or otherwise modify Vishay's terms and conditions of purchase, including but not limited to the warranty expressed therein.

Hyperlinks included in this datasheet may direct users to third-party websites. These links are provided as a convenience and for informational purposes only. Inclusion of these hyperlinks does not constitute an endorsement or an approval by Vishay of any of the products, services or opinions of the corporation, organization or individual associated with the third-party website. Vishay disclaims any and all liability and bears no responsibility for the accuracy, legality or content of the third-party website or for that of subsequent links.

Except as expressly indicated in writing, Vishay products are not designed for use in medical, life-saving, or life-sustaining applications or for any other application in which the failure of the Vishay product could result in personal injury or death. Customers using or selling Vishay products not expressly indicated for use in such applications do so at their own risk. Please contact authorized Vishay personnel to obtain written terms and conditions regarding products designed for such applications.

No license, express or implied, by estoppel or otherwise, to any intellectual property rights is granted by this document or by any conduct of Vishay. Product names and markings noted herein may be trademarks of their respective owners.

© 2024 VISHAY INTERTECHNOLOGY, INC. ALL RIGHTS RESERVED