MA734

8-Bit to 12.5-Bit, 3µs Low-Latency Contactless Angle Sensor

DESCRIPTION

The MA734 is a MagAlpha digital angle sensor that detects the absolute angular position of a permanent magnet, typically a diametrically magnetized cylinder on a rotating shaft. Fast data acquisition and processing provide accurate angle measurements from static angle measurement to high-speed rotation. The digital filtering is adjustable to optimize control loop performance when used in servo motor applications.

This sensor supports a wide range of magnetic field strengths and spatial configurations. Both end-of-shaft and side-shaft (off-axis mounting) configurations are supported.

The MA734 detects the strength of the magnetic field, and includes configurable thresholds that can be used for push-button human-machine interface (HMI) applications or for diagnostic purposes. An on-chip, non-volatile memory (NVM) provides storage for configuration parameters, such as the reference zero-angle and magnetic field detection thresholds. It is also possible to program the MA734 with volatile registers without accessing the NVM.

The MA734 is available in a QFN-16 (3mmx3mm) package.

FEATURES

- Programmable 8-Bit to 12.5-Bit Resolution Absolute Angle Encoder
- 3µs of Latency at Constant Rotation Speed
- SPI Serial Interface for Digital Angle Readout and Chip Configuration
- Programmable Magnetic Field Strength Detection for Diagnostic Checks
- NVM Read/Write Command Extends Memory Life
- 3.3V, 11mA Supply Current
- -40°C to +125°C Operating Temperature
- 0rpm to 60,000rpm Rotation
- Interrupt Out when Angle Change Is Detected
- Available in a QFN-16 (3mmx3mm) Package

APPLICATIONS

- General-Purpose Angle Measurement
- High-Resolution Angle Encoders
- Automotive Position Sensing
- Robotics

All MPS parts are lead-free, halogen-free, and adhere to the RoHS directive. For MPS green status, please visit the MPS website under Quality Assurance. "MPS", the MPS logo, and "Simple, Easy Solutions" are registered trademarks of Monolithic Power Systems, Inc. or its subsidiaries.

TYPICAL APPLICATION

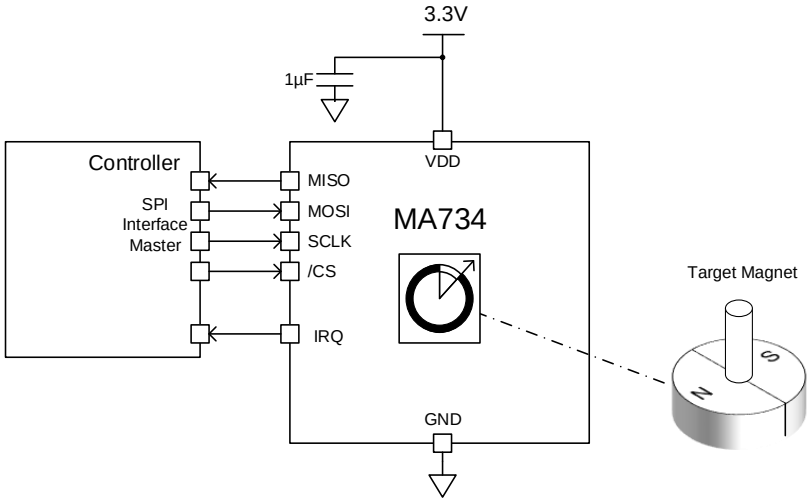

MPS Proprietary Information. Patent Protected. Unauthorized Photocopy and Duplication Prohibited.
© 2021 MPS. All Rights Reserved.

ORDERING INFORMATION

Part Number*	Package	Top Marking	MSL Rating
MA734GQ	QFN-16 (3mmx3mm)	*See Below*	1

* For Tape & Reel, add suffix -Z (e.g. MA734GQ-Z).

TOP MARKING

BQFY
LLL

BQF: Product code of MA734GQ
Y: Year code
LLL: Lot number

PACKAGE REFERENCE

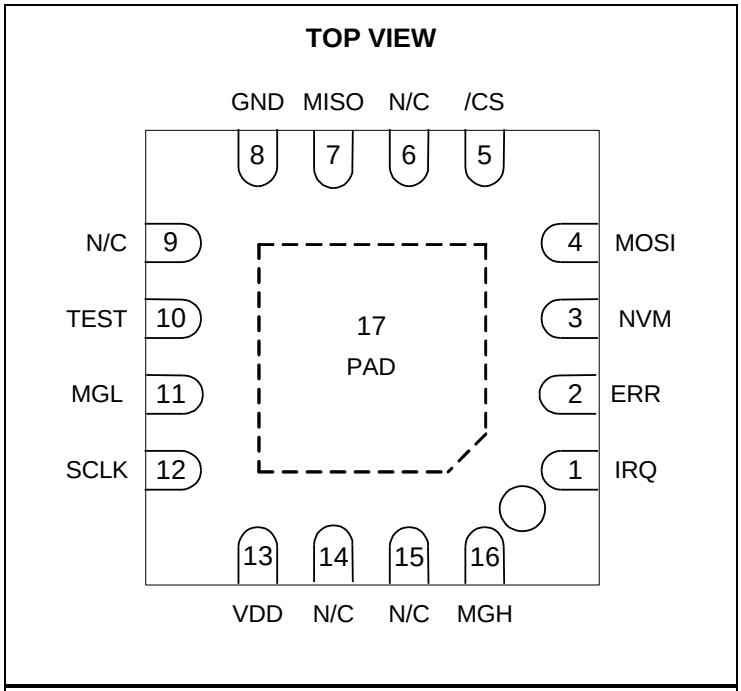

QFN-16 (3mmx3mm)

MPS Proprietary Information. Patent Protected. Unauthorized Photocopy and Duplication Prohibited.
© 2021 MPS. All Rights Reserved.

PIN FUNCTIONS

Pin #	Name	Description
1	IRQ	**Interrupt on angle change.** Output. Indicates that the angle change has exceeded the defined threshold.
2	ERR	**Error flag.** This pin is an active high output.
3	NVM	**Non-volatile memory (NVM).** This pin is an output that indicates that the chip is busy accessing the NVM.
4	MOSI	**Data in (SPI).** This pin is an internal pull-down resistor input.
5	/CS	**Chip select (SPI).** This pin is an internal, active low, pull-down resistor input.
6	NC	**No connection.** This pin is not internally connected.
7	MISO	**Data out (SPI).** This pin is an output, and is pulled down when /CS is logic 1 (i.e. SPI is inactive).
8	GND	**Supply ground.**
9	NC	**No connection.** This pin is not internally connected..
10	TEST	**Factory use only.** Connect TEST to ground.
11	MGL	**Digital output indicating field strength below MGLT level.** Output.
12	SCLK	**Clock (SPI).** This pin is an internal pull-down resistor input.
13	VDD	**3.3V supply.**
14	NC	**No connection.** This pin is not internally connected.
15	NC	**No connection.** This pin is not internally connected.
16	MGH	**Digital output.** This pin is an output that indicates the field strength above the MGHT level.
17	Exposed pad	**Recommended not to solder.** Leave this pin floating.

ABSOLUTE MAXIMUM RATINGS (1)

Supply voltage .....-0.5V to +4.6V
Input pin voltage (V_I) .....-0.5V to +6V
Output pin voltage (V_O) .....-0.5V to +4.6V
Continuous power dissipation (T_A = 25°C) (2)
..... 2W
Junction temperature .....150°C
Lead temperature .....260°C
Storage temperature ..... -65°C to +150°C

ESD Ratings

Human body model (HBM) 2kV
Charged device model (CDM) 2kV

Thermal Resistance (3) θ_{JA} θ_{JC}

QFN-16 (3mmx3mm)..... 50..... 12... °C/W

Notes:

1) Exceeding these ratings may damage the device.
2) The maximum allowable power dissipation is a function of the maximum junction temperature T_J (MAX), the junction-to-ambient thermal resistance θ_{JA}, and the ambient temperature T_A. The maximum allowable continuous power dissipation at any ambient temperature is calculated by P_D (MAX) = (T_J (MAX) - T_A) / θ_{JA}.
3) Measured on JESD51-7, 4-layer PCB.

MPS Proprietary Information. Patent Protected. Unauthorized Photocopy and Duplication Prohibited.
© 2021 MPS. All Rights Reserved.

ELECTRICAL CHARACTERISTICS

Parameter	Symbol	Condition	Min	Typ	Max	Units
Recommended Operating Conditions						
Supply voltage	V_{DD}		3.0	3.3	3.6	V
Supply current	I_{DD}	T_A -40°C to +125°C		11	12.5	mA
Ambient (operating) temperature	T_A		-40		+125	°C
Applied magnetic field	B		30	60		mT

GENERAL CHARACTERISTICS

V_{DD} = 3.3V, 45mT < B < 100mT, T_A = -40°C to +125°C, unless otherwise noted.

Parameter	Symbol	Condition	Min	Typ	Max	Units
Absolute Output – Serial						
Effective resolution (±3σ) (5)		Filter window, τ = 4µs, at 25°C	7.2		8.0	bits
		Filter window, τ = 1ms, at 25°C	10.2		11.5	
		Filter window, τ = 4ms, at 25°C	11.6		12.5	
Noise RMS (5)		Filter window, τ = 4µs, at 25°C	0.2		0.4	deg
		Filter window, τ = 1ms, at 25°C	0.02		0.05	
		Filter window, τ = 4ms, at 25°C	0.01		0.02	
Resolution drift in temperature (5)				-0.003		bits/°C
Refresh rate			850	980	1100	kHz
Data output length			16		16	bits
Response Time						
Start-up time (4)		Filter window, τ = 4µs			0.6	ms
		Filter window, τ = 1ms			16	ms
		Filter window, τ = 4ms			65	ms
Latency (4)		Constant speed propagation delay		3		µs
Filter cutoff frequency (4)	f_{CUTOFF}	Filter window, τ = 4µs		95		kHz
	f_{CUTOFF}	Filter window, τ = 1ms		380		Hz
	f_{CUTOFF}	Filter window, τ = 4ms		95		Hz
Accuracy						
INL at 25°C		At room temperature across the full field range		0.7		deg
INL between -40°C and +125°C (5)		Across the full temperature range and field range		1.1		deg
Output Drift						
Temperature-induced drift at room temperature (5)				0.01		deg/°C
Temperature-induced variation (5)		From 25°C to 85°C		0.5		deg
		From 25°C to 125°C		0.7		deg
Magnetic field induced (5)				0.01		deg/mT
Voltage supply induced (5)				0.35		deg/V

MPS Proprietary Information. Patent Protected. Unauthorized Photocopy and Duplication Prohibited.
© 2021 MPS. All Rights Reserved.

GENERAL CHARACTERISTICS *(continued)*

V_{DD} = 3.3V, 45mT < B < 100mT, T_A = -40°C to +125°C, unless otherwise noted.

Parameter	Symbol	Condition	Min	Typ	Max	Units
Magnetic Field Detection Thresholds						
Accuracy (5)				5		mT
Hysteresis (5)	MagHys			6		mT
Temperature drift (5)				-600		PPM/°C
Digital I/O						
Input high voltage	V_{IH}		2.5	3.3	5.5	V
Input low voltage	V_{IL}		-0.3	0	+0.8	V
Output low voltage (5)	V_{OL}	I_{OL} = 4mA		0	0.4	V
Output high voltage (5)	V_{OH}	I_{OH} = 4mA	2.4	3.3		V
Pull-up resistor	R_{PU}		46	66	97	kΩ
Pull-down resistor	R_{PD}		43	55	97	kΩ
Rising edge slew rate (4)	t_R	CL = 50pF		0.7		V/ns
Falling edge slew rate (4)	t_F	CL = 50pF		0.7		V/ns

Notes:

4) Guaranteed by design.
5) Guaranteed by characterization testing.

MPS Proprietary Information. Patent Protected. Unauthorized Photocopy and Duplication Prohibited.
© 2021 MPS. All Rights Reserved.

TYPICAL CHARACTERISTICS

V_{DD} = 3.3V, T_A = 25°C, unless otherwise noted.

Error Curves

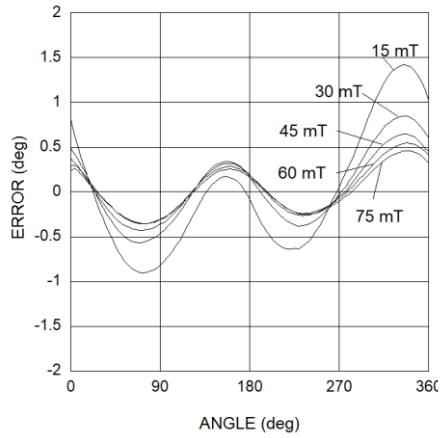

Noise Spectrum at 50mT with FW = 10

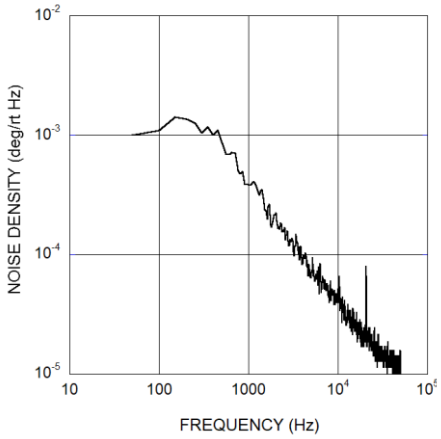

Filter Transfer Function with FW = 10

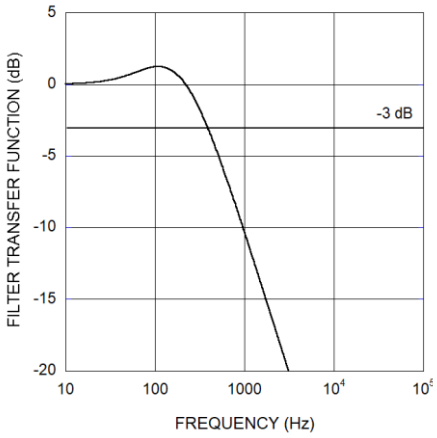

Supply Current

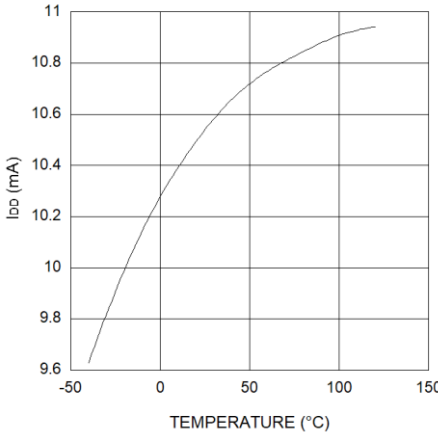

MPS Proprietary Information. Patent Protected. Unauthorized Photocopy and Duplication Prohibited.
© 2021 MPS. All Rights Reserved.

FUNCTIONAL BLOCK DIAGRAM

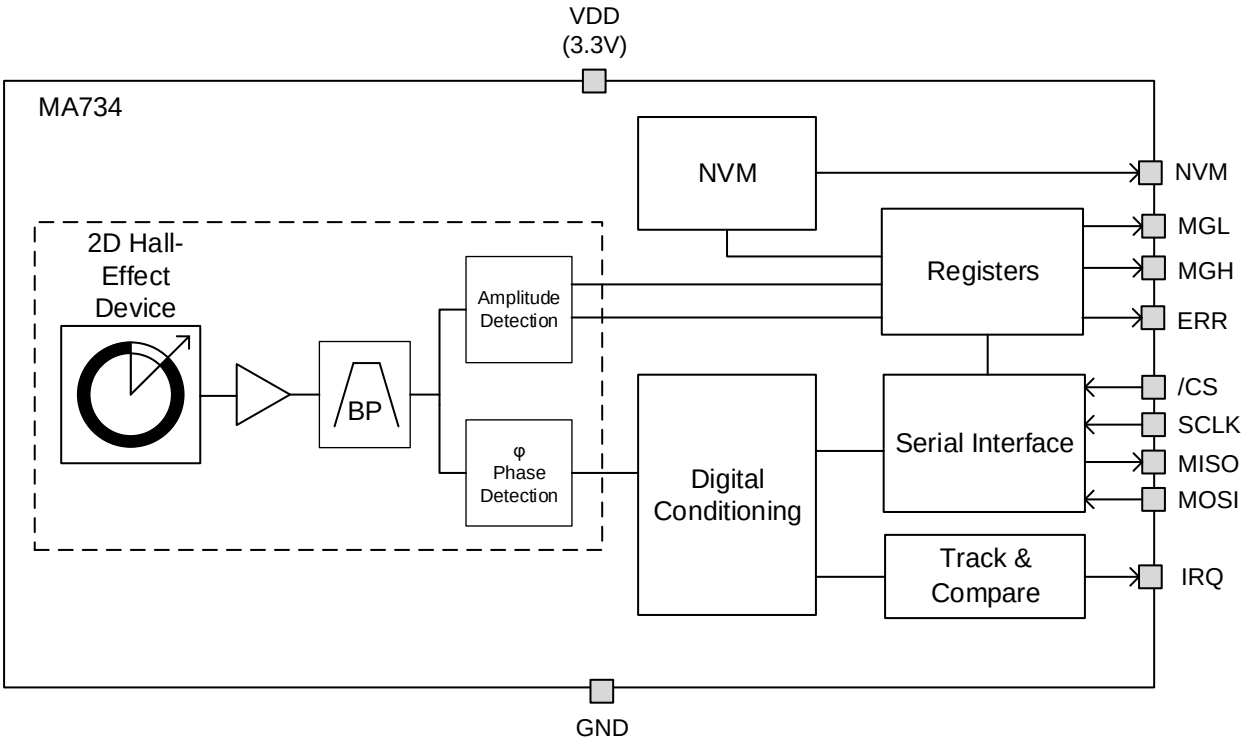

Figure 1: Functional Block Diagram

MPS Proprietary Information. Patent Protected. Unauthorized Photocopy and Duplication Prohibited.
© 2021 MPS. All Rights Reserved.

OPERATION

Sensor Front End

The magnetic field is detected with integrated Hall devices located in the center of the package. The angle is measured using MPS's proprietary SpinAxis™ method, which directly digitizes the direction of the field without the need for complex arctangent computation or feedback loop-based circuits (interpolators).

The SpinAxis™ method is based on phase detection, and generates a sinusoidal signal with a phase that represents the angle of the magnetic field. The angle is then obtained by a time-to-digital converter, which measures the time between the zero crossing of the sinusoidal signal and the edge of a constant waveform (see Figure 2). The time-to-digital is outputted from the front end to the digital conditioning block.

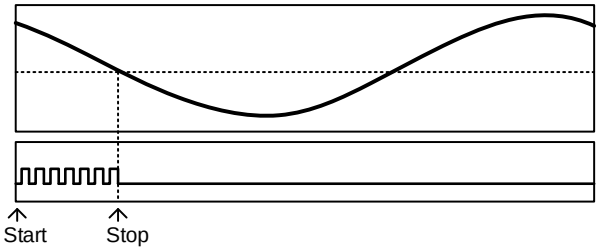

Figure 2: Phase Detection Method across the Sine Waveform (Top) and Time-to-Digital Converter Clock

The output of the front end delivers a digital number proportional to the angle of the magnetic field at a rate of 1MHz in a straightforward, open-loop manner.

Digital Filtering

The front-end signal is further treated to achieve the final effective resolution. This treatment does not add any latency in steady conditions. The filter transfer function can be calculated with Equation (1):

$$H(s) = \frac{1+2\tau s}{(1+\tau s)^2} \quad (1)$$

Where τ is the filter time constant (See Table 15 on page 21).

Sensor Magnet Mounting

The MA734's sensitive area (where the Hall devices are placed) is confined within a region less than 100µm wide and has multiple integrated Hall devices. This volume is located horizontally and vertically within 50µm of the center of the QFN package. The sensor detects the angle of the magnetic field projected in a plane parallel to the package's upper surface. This means that the only relevant magnetic field is the in-plane component (X and Y components) in the mid-point of the package.

By default, when looking at the top of the package, the angle increases when the magnetic field rotates clockwise. Figure 3 shows the zero angle of the unprogrammed sensor, where the plus sign indicates the sensitive point. Both the rotation direction and the zero angle can be programmed.

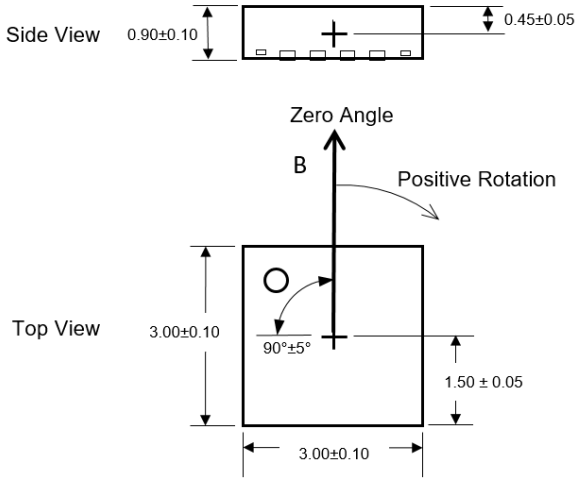

Figure 3: Detection Point and Default Positive Direction

This type of detection provides flexibility for angular encoder design. The sensor only requires the magnetic vector to lie within the sensor plane with a field amplitude of at least 30mT. The MA734 can work with fields smaller than 30mT, but the linearity and resolution performance may deviate from the specifications. The most straightforward mounting method is to place the MA734 sensor on the rotation axis of a permanent magnet (e.g. a diametrically magnetized cylinder) (see Figure 4 on page 9). The recommended magnet is a Neodymium alloy (N35) cylinder with dimensions of Ø5x3mm, inserted into an aluminum shaft with a 1.5mm air gap between the magnet and the sensor (surface of package). For good linearity, position the sensor with a precision of 10% of the magnet's radius.

MPS Proprietary Information. Patent Protected. Unauthorized Photocopy and Duplication Prohibited.
© 2021 MPS. All Rights Reserved.

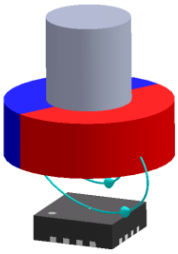

Figure 4: End-of-Shaft Mounting

If the end-of-shaft position is not available, the sensor can be positioned away from the rotation axis of a cylinder or ring magnet (see Figure 5). In this case, the magnetic field angle is not directly proportional to the mechanical angle. The MA734 can be adjusted to compensate for this effect and recover the linear relationship between the mechanical angle and the sensor output. With multiple pole pair magnets, the MA734 indicates multiple rotations for each mechanical turn.

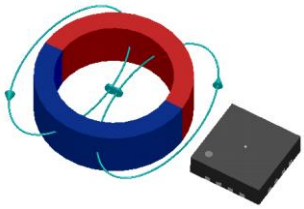

Figure 5: Side-Shaft Mounting

Electrical Mounting and Power Supply Decoupling

It is recommended to place a 1µF decoupling capacitor close to the sensor with a low-impedance path to GND (see Figure 6).

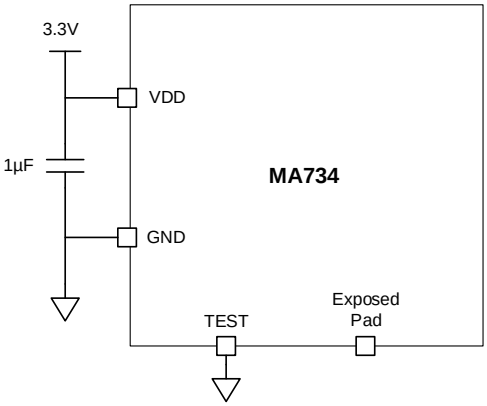

Figure 6: Supply Decoupling Connection

In general, the MA734 works well with or without the exposed pad connected. It is recommended that the exposed pad be left floating.

Serial Interface

The sensor supports the serial peripheral interface (SPI) standard for angle reading and register programming.

SPI

The SPI is a four-wire, synchronous, serial communication interface. The MA734 supports SPI Mode 3 and Mode 0 (see Table 1 and Table 2). The SPI Mode (0 or 3) is detected automatically by the sensor, and does not require additional action. There is no minimum clock rate. Real-world data rates depend on the PCB layout quality and signal trace length. See Figure 8, Figure 9, and Table 3 on page 11 for SPI timing.

Table 1: SPI Specification

	Mode 0	Mode 3
SCLK Idle State	Low	High
Data Capture	On SCLK rising edge	
Data Transmission	On SCLK falling edge	
/CS Idle State	High	
Data Order	MSB first	

Table 2: SPI Standard

	Mode 0	Mode 3
CPOL	0	1
CPHA	0	1
Data Order (DORD)	0 (MSB first)	

All commands to the MA734 (whether for writing or reading register content) must be transferred through the SPI MOSI pin and must be 16 bits long. See the SPI Communication section on page 12 for details.

SPI Signal Routing on a PCB

For a reliable data transfer through the SPI bus between the sensor (slave) and the controller (master), take extra care with the PCB design, especially the SCLK line. The steps below are recommended:

- Properly shield all SPI signals with a GND plane on both sides of each trace, as well as a GND plane underneath the SPI traces.
- Place vias along these traces to connect the top and bottom GND planes.

MPS Proprietary Information. Patent Protected. Unauthorized Photocopy and Duplication Prohibited.
© 2021 MPS. All Rights Reserved.

- To avoid EMI issues, route the SCLK signal away from the other SPI signals and noise sources. The distance should be at least 3 times the SCLK trace width.
- Insert an RC low-pass filter on SCLK. This RC filter must be located close to the sensor; it is recommended to use a 200Ω serial resistor with a 10pF shunt capacitor in order to have a filter with a cutoff frequency of about 80MHz (see Figure 7).
- Use a star topology for the GND connection, and keep it as direct and short as possible to avoid ground loops.
- Insert RC low-pass filters on MISO and MOSI signals. The RC filter on MOSI must be located close to the controller, and the filter on MISO must be located close to the sensor. It is recommended to use a 200Ω resistor with a 10pF capacitor.
- Avoid significant trace length mismatch between the SPI signals, especially between the MISO, MOSI, and SCLK signals. Design the PCB such that the trace lengths are equal for similar propagation delay.
- If possible, avoid vias on the SCLK signal.

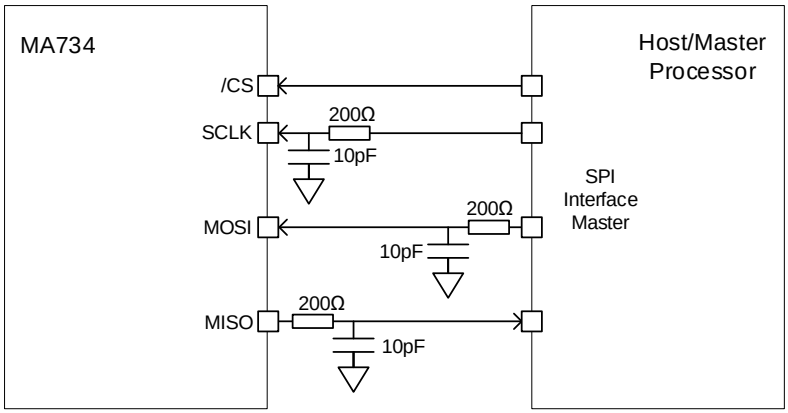

Figure 7: Example of RC Low-Pass Filter on SPI Signals

MPS Proprietary Information. Patent Protected. Unauthorized Photocopy and Duplication Prohibited.
© 2021 MPS. All Rights Reserved.

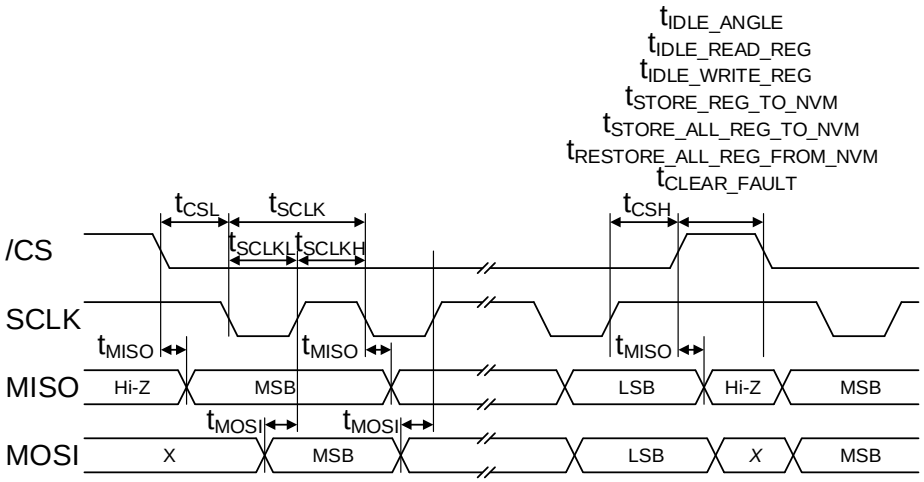

Figure 8: SPI Timing Diagram (Mode 3)

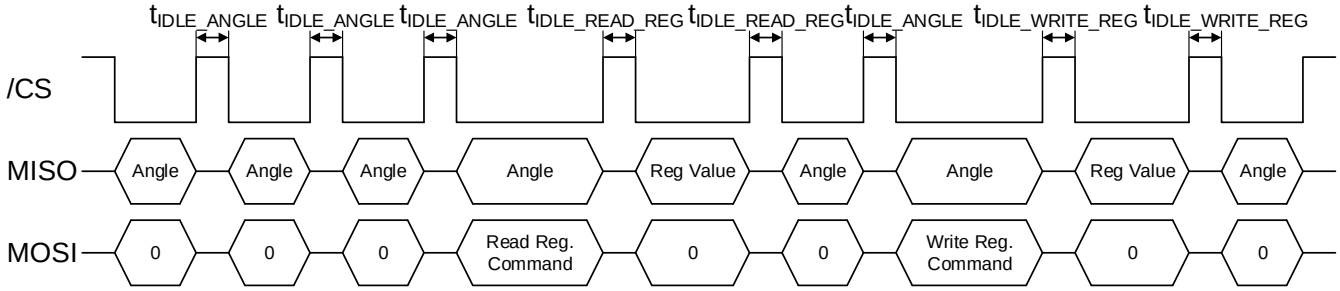

Figure 9: Minimum Idle Time

Table 3: SPI Timing

Parameter [6]	Description	Min	Max	Unit
t_{IDLE_ANGLE}	Idle time between two subsequent angle transmissions	120	-	ns
$t_{IDLE_READ_REG}$	Idle time before and after a register readout	120	-	ns
$t_{IDLE_WRITE_REG}$	Idle time before and after a register write	120	-	ns
$t_{STORE_REG_TO_NVM}$	Time required to store a single register to the NVM	23	-	ms
$t_{STORE_ALL_REG_TO_NVM}$	Time required to store all registers to the NVM	704	-	ms
$t_{RESTORE_ALL_REG_FROM_NVM}$	Time required to restore all registers from the NVM	240	-	µs
t_{CLEAR_FAULT}	Time required to clear the error flags (register 26)	40	-	ns
t_{CSL}	Time between /CS falling edge and SCLK falling edge	120	-	ns
t_{SCLK}	SCLK period	40	-	ns
t_{SCLKL}	Low level of SCLK signal	20	-	ns
t_{SCLKH}	High level of SCLK signal	20	-	ns
t_{CSH}	Time between SCLK rising edge and /CS rising edge	20	-	ns
t_{MISO}	SCLK falling edge to data output valid	-	15	ns
t_{MOSI}	Data input valid to SCLK reading edge	15	-	ns

Note:

6) Guaranteed by design.

MPS Proprietary Information. Patent Protected. Unauthorized Photocopy and Duplication Prohibited.
© 2021 MPS. All Rights Reserved.

SPI Communication

The MA734 supports the following types of SPI operation:

- Read angle
- Read register
- Write register
- Store a single register value to the NVM
- Store all register values to the NVM
- Restore all register values from the NVM
- Clear error flags

SPI Read Angle

Every 1µs, new data is transferred into the output buffer. The master device triggers the reading by pulling /CS low. When a trigger event is detected, the data remains in the output buffer until the /CS signal is de-asserted (see Table 4).

Table 4: Sensor Data Timing

Event	Action
/CS falling edge	Start reading and freeze output buffer
/CS rising edge	Release the output buffer

Figure 10 shows a diagram of a full SPI angle reading. Figure 11 shows a partial SPI angle reading.

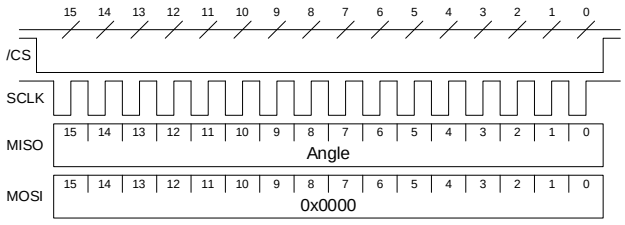

Figure 10: Full 16-Bit SPI Angle Reading Diagram

A full angle reading requires 16 clock pulses. The sensor MISO line returns:

	MSB … LSB
MISO	*Angle[15:0]*
MOSI	*0*

If less resolution is sufficient, the angle can be read by sending fewer clock counts, since the MSB is first (see Figure 11). If the reading cycle is shorter than the refresh time, the MA734 continues sending the same data until the data refreshes (for the refresh rate, see the General Characteristics section on page 4).

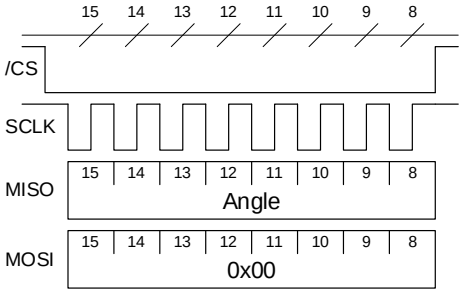

Figure 11: Partial 8-Bit SPI Angle Reading Diagram

SPI Read Register

A read register operation consists of two 16-bit frames. The first frame sends a read request, which contains the 3-bit read command (010) followed by the 5-bit register address. The last 8 bits of the frame must all be set to 0. The second frame returns the 8-bit register value (MSB byte) with an 8-bit angle value.

First 16-bit SPI frame (read request):

	MSB … LSB															
MISO	*Angle[15:0]*															
	Command			*Reg. Address*												
MOSI	*0*	*1*	*0*	A_4	A_3	A_2	A_1	A_0	*0*	*0*	*0*	*0*	*0*	*0*	*0*	*0*

Second 16-bit SPI frame (response):

	Reg. Value							
MISO	*Angle[15:8]*	V_7	V_6	V_5	V_4	V_3	V_2	V_1	V_0
	MSB … LSB							
MOSI	*0*							

Figure 12 on page 13 shows a complete transmission.

For example, to get the value of the magnetic level high and low flags (MGH and MGL), read register 27 (bit[6], bit[7]) by sending the following first frame:

	MSB … LSB															
MISO	*Angle[15:0]*															
	Command			*Reg. Address*												
MOSI	*0*	*1*	*0*	*1*	*1*	*0*	*1*	*1*	*0*	*0*	*0*	*0*	*0*	*0*	*0*	*0*

In the second frame, the MA734 replies:

	Reg. Value							
MISO	*Angle[15:8]*	*MGH*	*MGL*	*X*	*X*	*X*	*X*	*X*	*X*
	MSB … LSB							
MOSI	*0*							

MPS Proprietary Information. Patent Protected. Unauthorized Photocopy and Duplication Prohibited.
© 2021 MPS. All Rights Reserved.

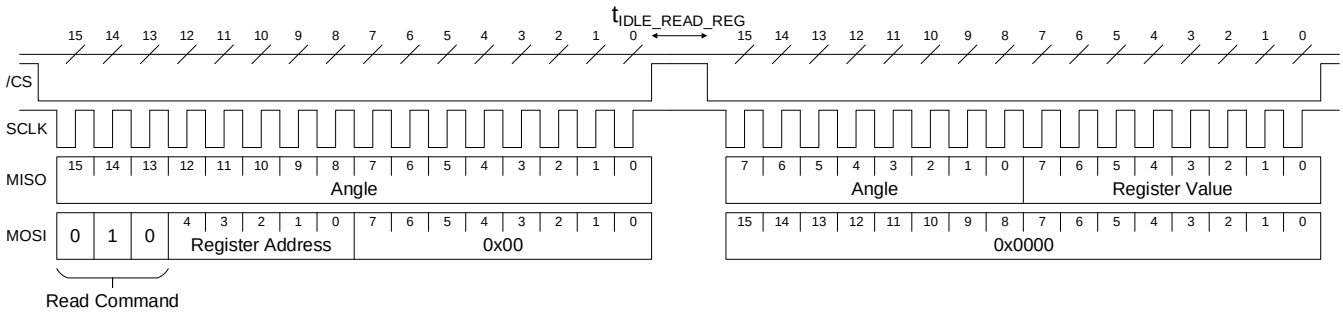

Figure 12: Read Register Operation with Two 16-Bit Frames

SPI Write Register

A write register operation consists of two 16-bit frames. The first frame sends a write request, which contains the 3-bit write command (100), followed by the 5-bit register address and the 8-bit value (MSB first). The second frame returns the newly written register value (acknowledge) with an 8-bit angle value.

The first 16-bit SPI frame (write request) is:

	MSB															LSB
MISO	Angle[15:0]															
	Command			Reg. Address					Reg. Value							
MOSI	1	0	0	A_4	A_3	A_2	A_1	A_0	V_7	V_6	V_5	V_4	V_3	V_2	V_1	V_0

The second 16-bit SPI frame (response) is:

	Reg. Value							
MISO	Angle[15:8]							
	V_7	V_6	V_5	V_4	V_3	V_2	V_1	V_0

	MSB	LSB
MOSI	0	

The readback register content can be used to verify the register programming. Figure 13 shows a complete transmission overview.

For example, to set the value of the output rotation direction (RD) to counterclockwise (RD bit = 1), write register 9 by sending the following first frame:

	MSB	LSB
MISO	Angle[15:0]	

	Command			Reg. Address					Reg. Value							
MOSI	1	0	0	0	1	0	0	1	1	0	0	0	0	0	0	0

Then send the second frame. If the register is written correctly, the reply is:

	Reg. Value							
MISO	Angle[15:8]							
	1	0	0	0	0	0	0	0

	MSB	LSB
MOSI	0	

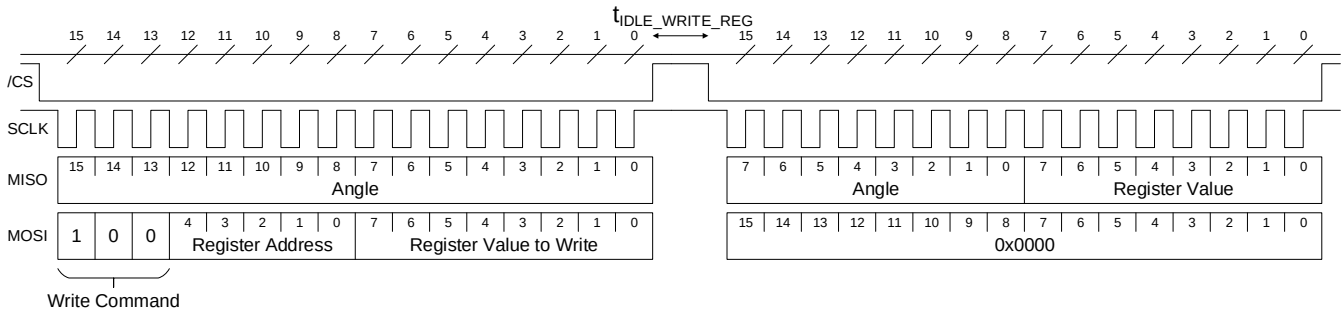

Figure 13: Write Register Operation with Two 16-Bit Frames

MPS Proprietary Information. Patent Protected. Unauthorized Photocopy and Duplication Prohibited.
© 2021 MPS. All Rights Reserved.

Non-Volatile Memory (NVM) Operation

The MA734 contains a non-volatile memory (NVM) to store the chip configuration during shutdown. The values stored in the NVM are automatically loaded to the sensor's registers at start-up. It is possible to manually force restoring the NVM values to the registers using the Restore All Registers from the NVM SPI command.

The registers can be copied to the NVM using either of two SPI commands:

1. Store a Single Register to the NVM
2. Store All Registers to the NVM

The desired configuration must first be written to the registers through the write register commands, and then the store commands can save one or all registers to the NVM.

Commands are ignored if the NVM is busy executing a previously received command. To check that the NVM is available and ready to receive a new command, observe the NVM pin level:

- High: Busy
- Low: Available to receive new commands

SPI Store a Single Register to the NVM

The current value of a specific register can be stored in the NVM. Commands are ignored if the NVM is busy executing a previously received command (see Figure 14).

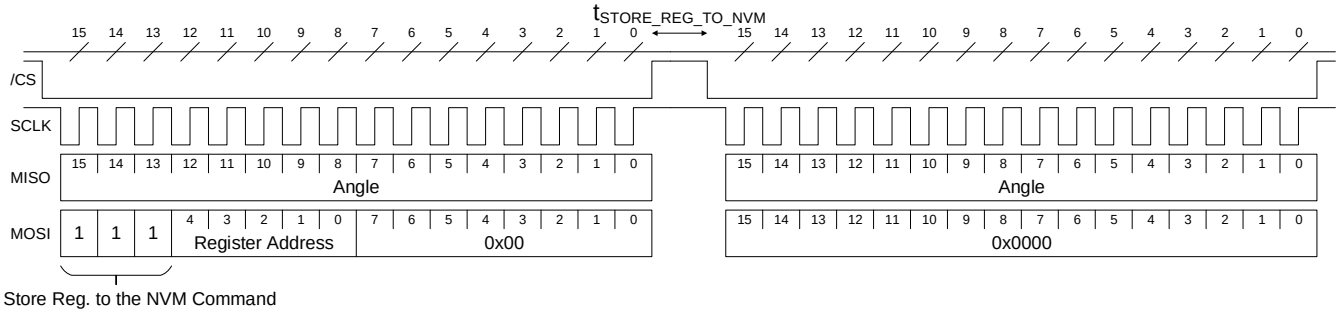

Figure 14: Store a Single Register to the NVM Operation with Two 16-Bit Frames

SPI Store All Registers to the NVM

The user can store the current value of all registers in the NVM (see Figure 15).

Commands are ignored if the NVM is busy executing a previously received command.

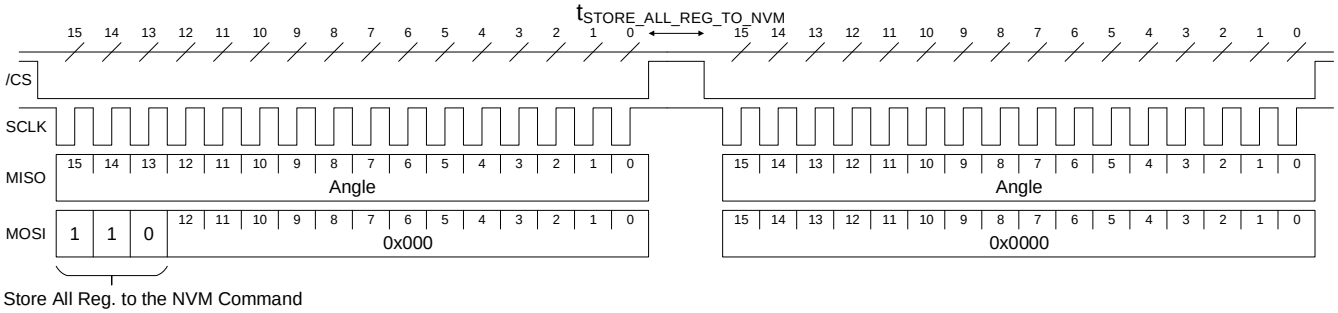

Figure 15: Store All Registers to the NVM Operation with Two 16-Bit Frames

SPI Restore All Registers from the NVM

The user can also restore the value of all registers from the NVM. This operation is done automatically during each start-up (see Figure 16). Commands are ignored if the NVM is busy executing a previously received command.

MPS Proprietary Information. Patent Protected. Unauthorized Photocopy and Duplication Prohibited.
© 2021 MPS. All Rights Reserved.

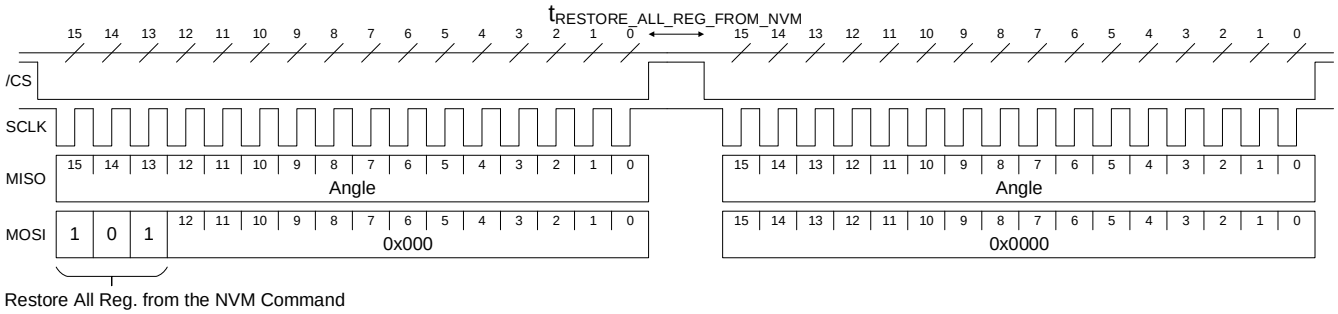

Figure 16: Restore All Registers from the NVM Operation with Two 16-Bit Frames

SPI Clear Error Flags

The error flags on the ERR pin and in register 26 can be cleared using the SPI Clear Error Flags command (see Figure 17).

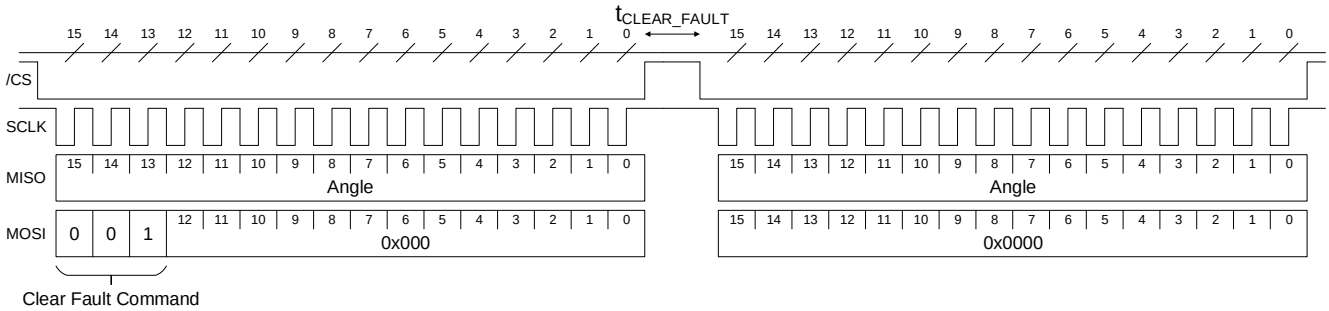

Figure 17: Clear Error Flags Operation with Two 16-Bit Frames

Table 5 shows a summary of all SPI commands.

Table 5: SPI Command List Overview

Command Name	Command Bits[15:13]	Register Address Required?	Register Value Required?	Returned Value
Read Angle	000	No	No	16-bit angle
Read Register	010	Yes	No	8-bit angle + register value
Write Register	100	Yes	Yes	8-bit angle + register value
Store Single Register to the NVM	111	Yes	No	16-bit angle
Store All Registers to the NVM	110	No	No	16-bit angle
Restore All Registers from the NVM	101	No	No	16-bit angle
Clear Error Flags	001	No	No	16-bit angle

MPS Proprietary Information. Patent Protected. Unauthorized Photocopy and Duplication Prohibited.
© 2021 MPS. All Rights Reserved.

REGISTER MAP

Table 6: Register Map

# of Registers	Hex	Binary	R/W	Bit[7] (MSB)	Bit[6]	Bit[5]	Bit[4]	Bit[3]	Bit[2]	Bit[1]	Bit[0] (LSB)
0	0x0	00000	R/W	Z[7:0]							
1	0x1	00001	R/W	Z[15:8]							
2	0x2	00010	R/W	BCT[7:0]							
3	0x3	00011	R/W	-	-	-	-	-	-	ETY	ETX
6	0x6	00110	R/W	MGLT[2:0]		MGHT[2:0]		-	-	-	MG
7	0x7	00111	R/W	IRQM	RAR	HYST[5:0]					
8	0x8	01000	R/W	THR[7:0]							
9	0x9	01001	R/W	RD	-	-	-	-	-	-	-
10	0xA	01010	R/W	REF[7:0]							
14	0xE	01110	R/W	FW[3:0]				-	-	-	-
26	0x1A	11010	R	-	-	-	-	ERR-PAR	ERR-MEM	ERR-NVM	-
27	0x1B	11011	R	MGH	MGL	-	-	-	-	-	-

Table 7: Factory Default Values

# of Registers	Hex	Binary	R/W	Bit[7] (MSB)	Bit[6]	Bit[5]	Bit[4]	Bit[3]	Bit[2]	Bit[1]	Bit[0] (LSB)
0	0x0	00000	R/W	0	0	0	0	0	0	0	0
1	0x1	00001	R/W	0	0	0	0	0	0	0	0
2	0x2	00010	R/W	0	0	0	0	0	0	0	0
3	0x3	00011	R/W	0	0	0	0	0	0	0	0
6	0x6	00110	R/W	0	0	0	1	1	1	0	1
7	0x7	00111	R/W	1	0	0	0	0	0	1	1
8	0x8	01000	R/W	0	1	0	0	0	0	0	0
9	0x9	01001	R/W	0	0	0	0	0	0	0	0
10	0xA	01010	R/W	0	1	0	0	0	0	0	0
14	0xE	01110	R/W	1	0	1	0	0	0	0	0

MPS Proprietary Information. Patent Protected. Unauthorized Photocopy and Duplication Prohibited.
© 2021 MPS. All Rights Reserved.

Table 8: Programming Parameters

Parameters	Symbol	# of Bits	Description	See Table
Zero setting	Z	16	Sets the zero position	9
Bias current trimming	BCT	8	For side-shaft configuration: reduces the bias current of the X or Y Hall device	11
Enable trimming X	ETX	1	Biased current trimmed in the X-direction Hall device	12
Enable trimming Y	ETY	1	Biased current trimmed in the Y-direction Hall device	12
Enable magnetic field threshold	MG	1	Activates magnetic field threshold detection	-
Magnetic field high threshold	MGHT	3	Sets the field strength high threshold	14
Magnetic field low threshold	MGLT	3	Sets the field strength low threshold	14
IRQ mode	IRQM	1	IRQ pin in logic or latched mode	19
Reference auto-refresh	RAR	1	IRQ pin: automatically updates the reference at each detection change	18
Hysteresis	HYST	6	Hysteresis of the IRQ signal in logic mode	20
Threshold	THR	8	IRQ signal detection threshold	16
Rotation direction	RD	1	Determines the sensor positive direction	10
Reference	REF	8	IRQ pin: reference position	17
Filter window	FW	4	Size of the digital filter window	15

MPS Proprietary Information. Patent Protected. Unauthorized Photocopy and Duplication Prohibited.
© 2021 MPS. All Rights Reserved.

REGISTER SETTINGS

Zero Setting

The MA734's zero position (a_0) can be programmed with 16 bits of resolution. The angle streamed out by the MA734 (a_{OUT}) is calculated with Equation (2):

$$a_{OUT} = a_{RAW} - a_0 \quad (2)$$

Where a_{RAW} is the raw angle provided by the MA734's front end.

The parameter Z[15:0], is the zero-angle position coded on 16 bit (see Table 9).

Table 9: Zero-Setting Parameter

Z[15:0]	Zero Position a_0 (deg)
0	0
1	0.005
2	0.011
…	…
65534	359.989
65535	359.995

Rotation Direction

By default, when looking at the top of the package, the angle increases when the magnetic field rotates clockwise (CW) (see Figure 18 and Table 10).

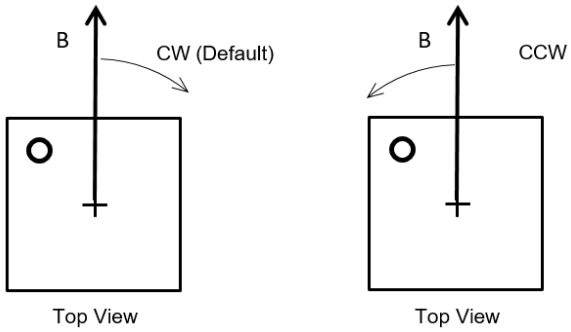

Figure 18: Positive Rotation Direction of the Magnetic Field

Table 10: Rotation Direction Parameter

RD	Positive Direction
0	Clockwise (CW)
1	Counterclockwise (CCW)

BCT Settings (Bias Current Trimming)

Side-Shaft

When the MA734 is mounted on the side of the magnet, the relationship between the field angle and the mechanical angle is no longer directly linear. This effect is related to the fact that the tangential magnetic field is usually smaller than the radial field. Calculate the field ratio (*k*) with Equation (3):

$$k = B_{RAD}/B_{TAN} \quad (3)$$

Where B_{RAD} and B_{TAN} are the maximum radial and tangential magnetic fields (see Figure 19).

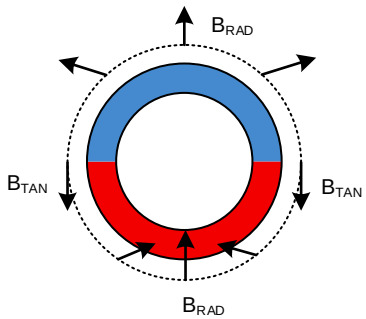

Figure 19: Side-Shaft Field

The *k* ratio depends on the magnet geometry and the distance to the sensor. Having a *k* ratio other than 1 results in the sensor output response not being linear with respect to the mechanical angle. Note that the error curve has the shape of a double sinewave (see Figure 21 on page 19). E is the amplitude of this error.

The X-axis or the Y-axis bias currents can be reduced to recover an equal Hall signal for all angles, and therefore suppress the error. The ETX and ETY parameters control the direction in which sensitivity is reduced. The current reduction is set by the parameter bias current trimming register, BCT[7:0], which is an integer from 0 to 255.

In side-shaft configuration (i.e. the sensor center is located beyond the magnet outer diameter), *k* > 1. If *k* is known, set BCT using Equation (4):

$$BCT[7:0] = 258\left(1 - \frac{1}{k}\right) \quad (4)$$

Figure 20 on page 19 shows the optimum BCT value for a particular *k* ratio.

MPS Proprietary Information. Patent Protected. Unauthorized Photocopy and Duplication Prohibited.
© 2021 MPS. All Rights Reserved.

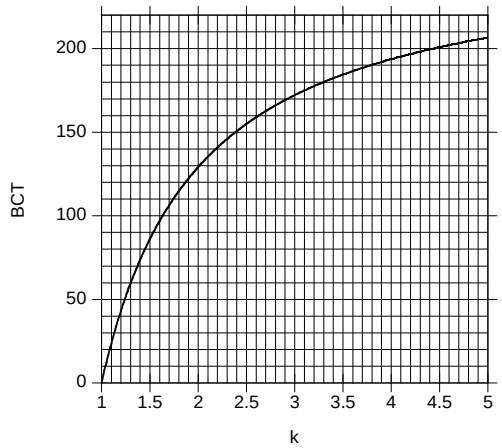

Figure 20: Relationship between the *k* Ratio and the Optimum BCT to Recover Linearity

Table 11 shows some typical BCT values.

Table 11: Example of BCT Settings

E (deg)	Magnet Ratio *k*	BCT[7:0]
0	1.0	0
11.5	1.5	86
19.5	2.0	129
25.4	2.5	155
30.0	3.0	172
33.7	3.5	184
36.9	4.0	194
39.5	4.5	201
41.8	5.0	207

Determining *k*

The *k* ratio can be deduced from the error curve obtained with the default BCT setting (BCT = 0). Rotate the magnet more than one revolution and record the device's output. Next, plot the error curve (the output minus the real mechanical position vs. the real mechanical position) and extract two parameters: the maximum error (E) and the position of this maximum with respect to a zero crossing a_M (see Figure 21). *k* can be calculated with Equation (5):

$$k = \frac{\tan(E + a_M)}{\tan(a_M)} \quad (5)$$

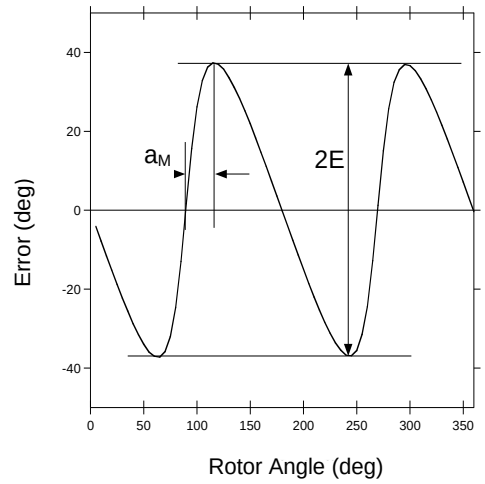

Figure 21: Error Curve in Side-Shaft Configuration with BCT = 0

Table 11 shows some examples. Alternatively, the *k* parameter can be obtained using Figure 22.

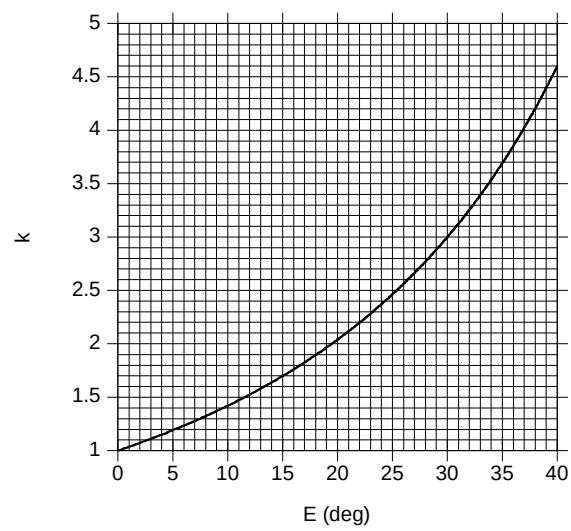

Figure 22: Relationship between the Error Measured with BCT = 0 and the Magnet Ratio *k*

Sensor Orientation

The dot marked on the package indicates whether the radial field is aligned with sensor coordinate X or Y (see Figure 23).

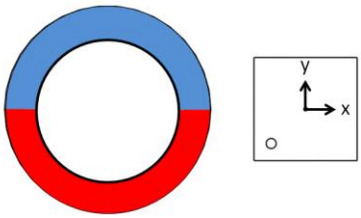

Figure 23: Package Top View with X- and Y-Axes

MPS Proprietary Information. Patent Protected. Unauthorized Photocopy and Duplication Prohibited.
© 2021 MPS. All Rights Reserved.

Determine which axis needs to be reduced based on the qualitative field distribution around a ring (see Figure 19 on page 18). For example, Figure 23 shows an arrangement in which the field along the sensor Y direction is tangential and weaker. The X-axis should be reduced (ETX = 1 and ETY = 0). If both ETX and ETY are set to 1, the current bias is reduced in both directions the same way (i.e. without side-shaft correction) (see Table 12). This reduces the sinusoidal signal and consequently modifies the magnetic field thresholds (see Figure 2 on page 8).

Table 12: Trimming Direction Parameters

ETX	Enable Trimming of the X-Axis
0	Disabled
1	Enabled
ETY	**Enable Trimming of the Y-Axis**
0	Disabled
1	Enabled

Magnetic Field Thresholds

The magnetic flags (MGL and MGH) indicate that the magnetic field at the sensor position is out of the range defined by the lower (MGLT) and upper magnetic field thresholds (MGHT) (see Figure 24).

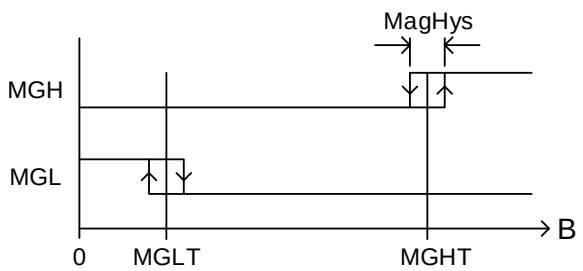

Figure 24: MGH and MGL Signals as a Function of the Field Strength

MagHys, the typical hysteresis on the signals MGH and MGL, is 6mT. The MGLT and MGHT thresholds are coded on 3 bits and stored in register 6 (see Table 13).

Table 13: Register 6

Register 6							
Bit[7]	**Bit[6]**	**Bit[5]**	**Bit[4]**	**Bit[3]**	**Bit[2]**	**Bit[1]**	**Bit[0]**
MGLT			MGHT			-	-

Table 14 shows the relationship between the 3-bit values of MGLT and MGHT and the magnetic field.

Table 14: MGLT and MGHT Binary to mT Relationship

MGLT or MGHT (8)	Field Threshold in mT (7)	
	From Low to High Magnetic Field	From High to Low Magnetic Field
000	26	20
001	41	35
010	56	50
011	70	64
100	84	78
101	98	92
110	112	106
111	126	120

Notes:

7) Valid for V_{DD} = 3.3V. If different, then the field threshold is scaled by the factor V_{DD} / 3.3V.
8) MGLT can be larger than MGHT.
9) When ETX = 1 and ETY = 1, it is possible to increase the field thresholds by increasing BCT.

The MGL and MGH alarm flags can be read via register 27 (bit[6] and bit[7]), and their logic state is also given at digital output pins 11 and 16.

To read the MGL and MGH flags via the SPI, send the 8-bit read command to register 27:

Command			*Reg. Address*					*MSB*			*Value*				*LSB*
0	*1*	*0*	*1*	*1*	*0*	*1*	*1*	*0*	*0*	*0*	*0*	*0*	*0*	*0*	*0*

The MA734 response with the register 27 content in the next transmission:

R[7:0]							
MGH	**MGL**	x	x	x	x	x	x

Filter Window (FW)

The filter window (FW) determines the effective resolution (defined as the ±3σ noise interval). Figure 25 shows the effective resolution for different window size (FW) and magnetic field (B).

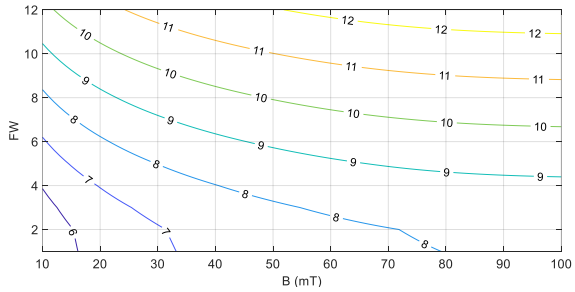

Figure 25: Resolution as a Function of Magnetic Field and Window Size

MPS Proprietary Information. Patent Protected. Unauthorized Photocopy and Duplication Prohibited.
© 2021 MPS. All Rights Reserved.

Since FW modifies the filter time constant (τ), it has an impact on the output bandwidth. The cutoff frequency (f_{CUTOFF}), which is the upper limit of the bandwidth, the cutoff frequency, can be calculated with Equation (6):

$$f_{CUTOFF} = 0.38 / \tau \quad (6)$$

Table 15 shows the time constant for each window.

Table 15: Filter Window Size

Window Size FW[3:0]	τ (µs)	f_{CUTOFF} (Hz)
0	1	380 000
1	2	190 000
2	4	95 000
3	8	47 500
4	16	23 750
5	32	11 875
6	64	5 940
7	128	2 970
8	256	1 480
9	512	740
10 (default)	1024	380
11	2048	190
12	4096	95
13	4096	95
14	4096	95
15	4096	95

The time constant (τ) is the parameter entered in the transfer function (1). This allows the user to accurately model the system and analyze the stability of a control loop.

Angle Change Interrupt (IRQ)

Pin 1 indicates when the angle changes with respect to a reference angle. The reference can either be a fixed value, or can be automatically updated at each IRQ event.

Threshold

The threshold for defining a change is a relative angle controlled by the parameter THR.

THR is coded on 8 bits (see Table 16). If THR is greater than 180, then the IRQ flag is disabled.

Table 16: IRQ Threshold

THR[7:0]	Threshold (deg)
0	0
1	1.41
2	2.81
…	…
64	90 (default)
…	…
127	178.59
128	180 (IRQ flag only at 180)
129	181.41 (no IRQ flag)
…	…
255	358.59 (no IRQ flag)

Reference

The change is defined in relationship to a reference angle. This angle is controlled by the parameter REF. If the angle distance to REF gets larger than the threshold, the IRQ pin goes high. REF is an absolute angle coded on 8 bits (see Table 17).

Table 17: Change Detection Fixed Reference

REF[7:0]	Reference (deg)
0	0
1	1.41
2	2.81
…	…
64	90 (default)
…	…
255	358.59

REF can be a fixed value, or can be automatically updated at each crossing of the threshold. Incremental change can also be detected. Use the reference auto-refresh bit (RAR) to select between the reference types (see Table 18).

Table 18: Reference Auto-Refresh Mode

RAR	Reference
0 (default)	Remains fixed
1	Automatically updated

If RAR = 0, REF remains fixed (to the default value or the user value).

If RAR = 1, REF is automatically updated each time the threshold is crossed (see Figure 26 on page 22). The user value is replaced by the updated REF value, which is the sensor output value at the moment the threshold was crossed.

MPS Proprietary Information. Patent Protected. Unauthorized Photocopy and Duplication Prohibited.
© 2021 MPS. All Rights Reserved.

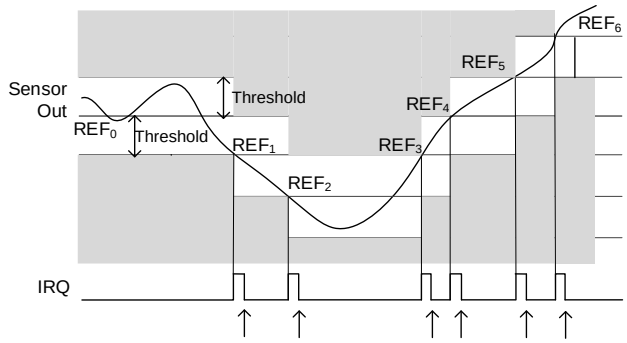

Figure 26: IRQ Motion Profile Signal Response if RAR = 1 and IRQM = 0 (Arrows = SPI Readings)

IRQ Mode (IRQM)

The IRQ pin can be set to logic level or latch-off mode using the IRQM bit in register 7 (see Table 19).

Table 19: IRQ Pin Mode Parameter

IRQM	Mode
0	Latch off
1 (default)	Logic level

In latch-off mode, the IRQ pin resets on the first SCLK rising edge of some SPI commands (i.e. read angle, store registers to the NVM, restore registers from the NVM, and clear status byte). The IRQ flag does not reset when writing or reading the registers.

In logic-level mode, the IRQ signal is updated every 1µs, and reflects the status of the condition (i.e. the relationship between angle output value, angle threshold, and angle reference) in real time (see Figure 27).

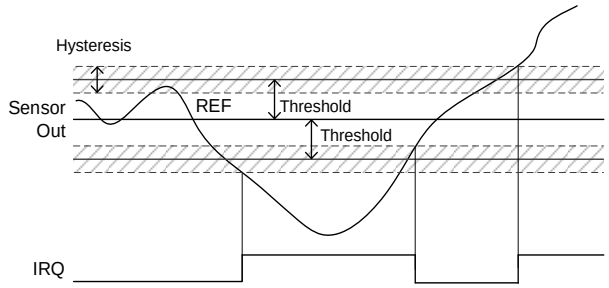

Figure 27: IRQ Signal in Logic-Level Mode when Hysteresis is Applied

In this mode, the IRQ signal status is not reset when SPI reads the angle. To avoid multiple transitions around the threshold, program an amount of hysteresis via HYST[5:0] in register 7, using Equation (7):

$$\text{Hysteresis} = \frac{11.25°}{64}\ \text{HYST[5:0]} \qquad (7)$$

HYST[5:0] is 3 by default, which means the hysteresis is set to 0.53° (see Table 20).

Table 20: IRQ Pin Hysteresis Setting

HYST[5:0]	HYST (deg)
000000	0
…	…
111111	11.07

HYST[5:0] affects the hysteresis of the IRQ pin whether IRQM is 0 or 1.

If RAR = 1 and IRQM = 1, the IRQ pin resets immediately after being set, generating a short pulse.

Error Flags

Register 26 contains information about the sensor's operational integrity, detailed below.

ERRPAR

When using 17-bit communication on the SPI bus, the SPI write register command sent by the controller to the sensor can be checked for parity (unlike the other commands). The controller sends a parity bit on the MOSI line after the 16-bit command. The sensor checks the parity of the 17-bit long command. If the parity is not even, then the data to be written to the register is discarded and the ERRPAR bit asserts (set to 1).

ERRMEM

The ERRMEM bit asserts (set to 1) if an SPI write register command is sent while the NVM is busy (NVM pin is high). To avoid raising the ERRMEM flag, the user must ensure that no SPI write is sent while the NVM pin is high (set to 1). It is also recommended to check that the register value returned by the SPI write register command matches the desired written value (see the SPI Write Register section on page 13).

ERRNVM

Restoring register values from the NVM is secured by a cyclic redundancy check (CRC) algorithm. If the generated CRC result does not match the stored value, the ERRNVM bit being asserted (set to 1). If any error flag is asserted, the ERR pin is set to logic 1. Clear the error flags and ERR pin by sending the SPI Clear Error Flags command.

MPS Proprietary Information. Patent Protected. Unauthorized Photocopy and Duplication Prohibited.
© 2021 MPS. All Rights Reserved.

TYPICAL APPLICATION CIRCUIT

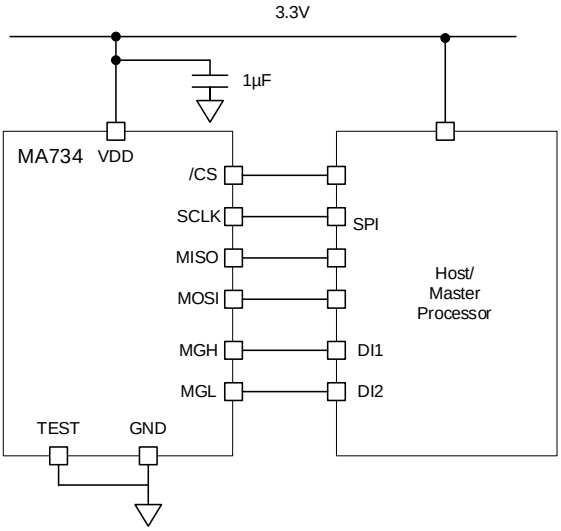

Figure 28: Typical Application Circuit Using an SPI Interface and MGH/MGL Signals

MPS Proprietary Information. Patent Protected. Unauthorized Photocopy and Duplication Prohibited.
© 2021 MPS. All Rights Reserved.

APPENDIX A: DEFINITIONS

Effective Resolution (3σ noise level)

The smallest angle increment distinguishable from the noise. The resolution is measured by computing three times σ (the standard deviation in degrees) taken across 1,000 data points at a constant position. The resolution in bits is obtained with: $\log_2(360 / 6\sigma)$.

Refresh Rate

The rate at which new data points are stored in the output buffer.

Latency

The time elapsed between the instant when the data is ready to be read and the instant at which the shaft passes that position. The lag in degrees is lag = latency x *v*, where *v* is the angular velocity in deg/s.

Start-Up Time

The time until the sensor delivers valid data beginning at start-up.

Integral Nonlinearity (INL)

Maximum deviation between the average sensor output (at a fixed position) and the true mechanical angle (see Figure A1).

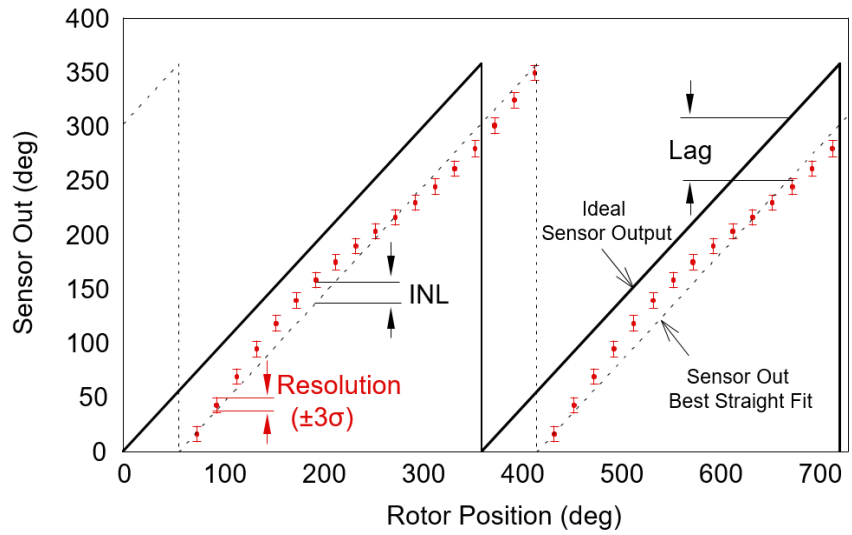

Figure A1: Resolution, INL, Lag

INL can be obtained from the error curve err(a) = out(a) - a, where out(a) is the average across 1,000 sensor outputs and *a* is the mechanical angle indicated by a high-precision encoder (<0.001°). INL is then calculated with Equation (A1):

$$INL = \frac{\max(err(a)) - \min(err(a))}{2} \quad (A1)$$

Drift

The angle variation rate when one parameter is changed (e.g. temperature, V_{DD}) but all others, including the shaft angle, remain constant.

MPS Proprietary Information. Patent Protected. Unauthorized Photocopy and Duplication Prohibited.
© 2021 MPS. All Rights Reserved.

APPENDIX B: SPI COMMUNICATION CHEATSHEET

Read Angle (see the SPI Read Angle section)

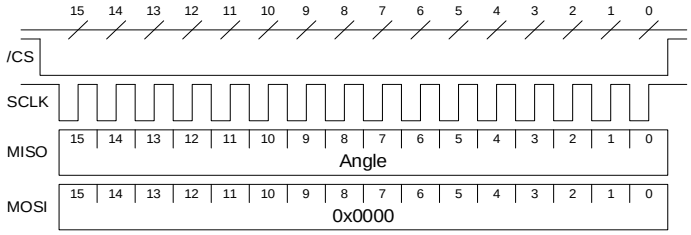

Read Register (see the section SPI Read Register section)

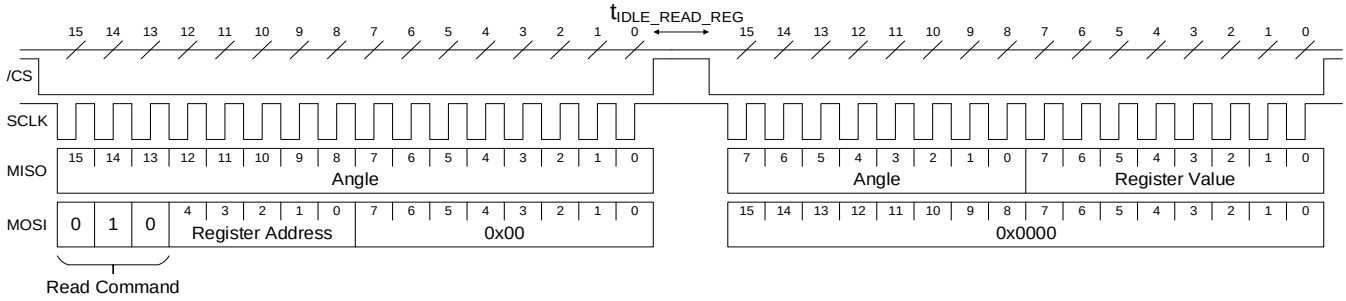

Write Register (see the section SPI Write Register section)

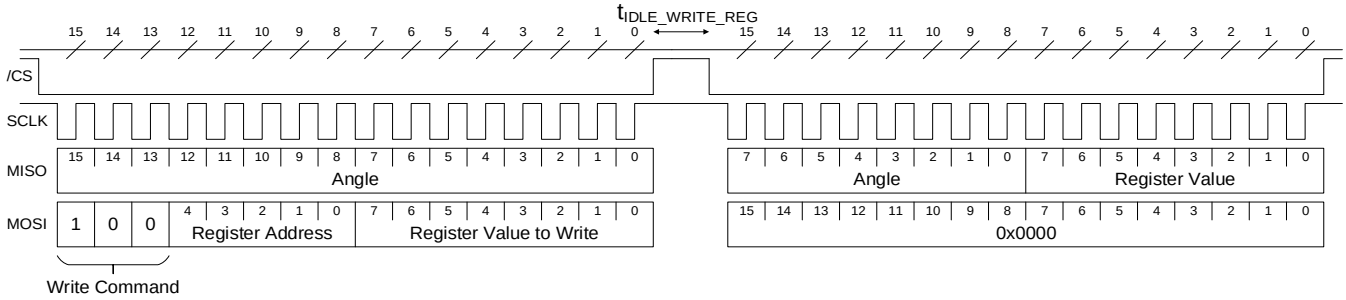

Store a Single Register to the NVM (see the SPI Store a Single Register to the NVM section)

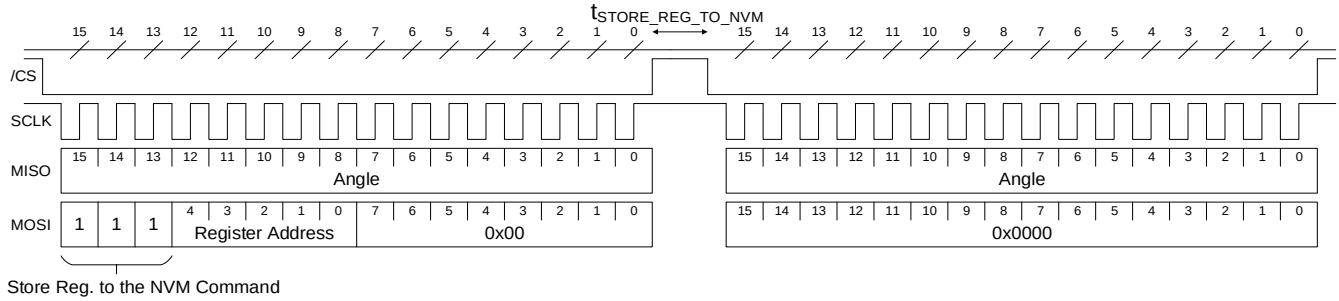

MPS Proprietary Information. Patent Protected. Unauthorized Photocopy and Duplication Prohibited.
© 2021 MPS. All Rights Reserved.

Store All Registers to the NVM (see the SPI Store All Registers to the NVM section)

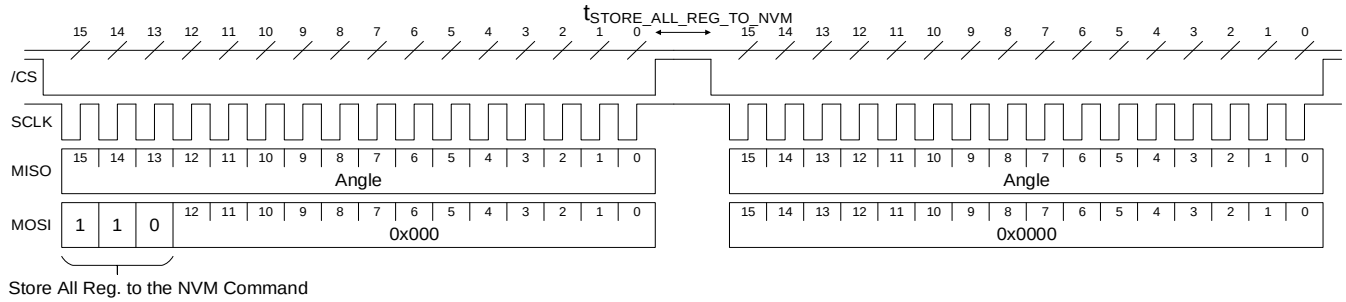

Restore All Registers from the NVM (see the SPI Restore All Registers from the NVM section)

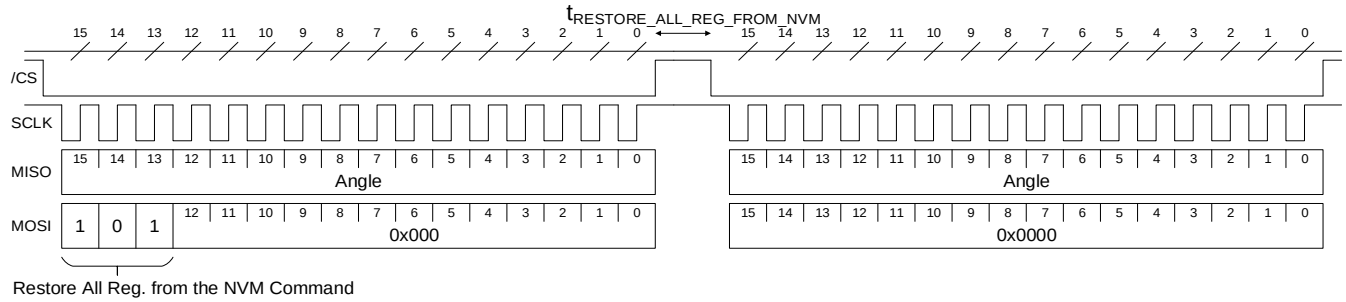

Clear Error Flags (see the SPI Clear Error Flags section)

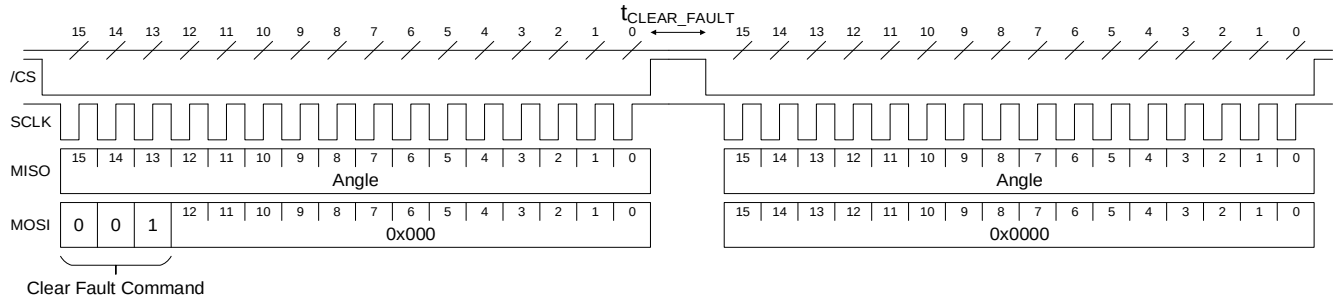

MPS Proprietary Information. Patent Protected. Unauthorized Photocopy and Duplication Prohibited.
© 2021 MPS. All Rights Reserved.

PACKAGE INFORMATION

QFN-16 (3mmx3mm)

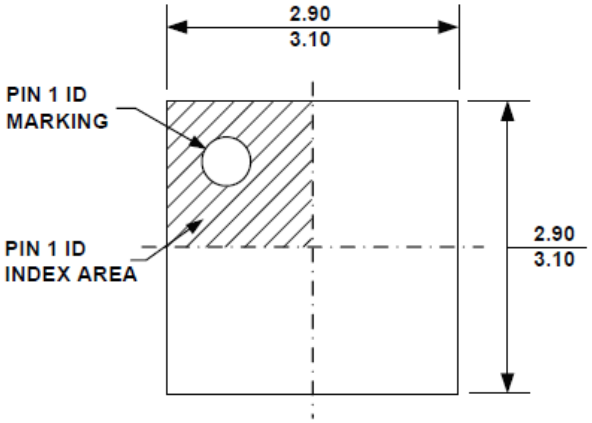

TOP VIEW

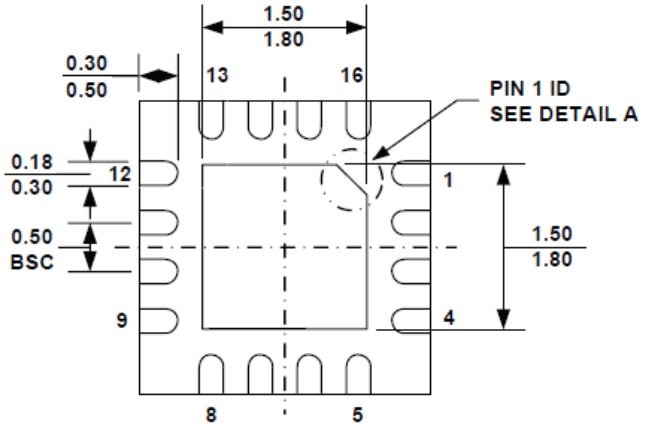

BOTTOM VIEW

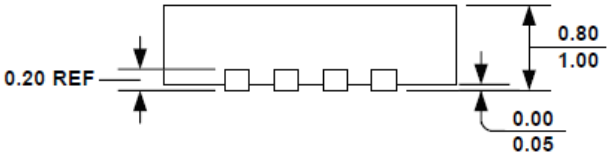

SIDE VIEW

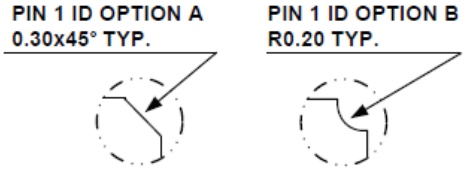

DETAIL A

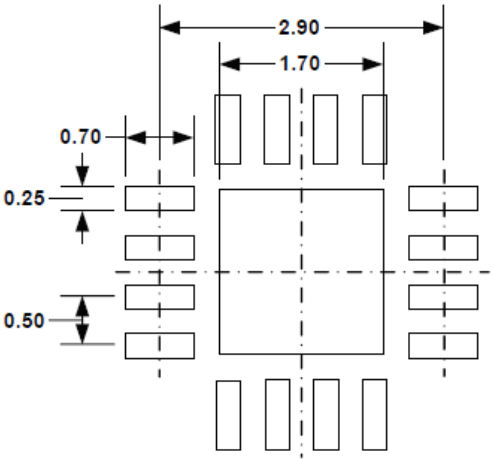

RECOMMENDED LAND PATTERN

NOTE:

1) ALL DIMENSIONS ARE IN MILLIMETERS.
2) EXPOSED PADDLE SIZE DOES NOT INCLUDE MOLD FLASH.
3) LEAD COPLANARITY SHALL BE 0.10 MILLIMETER MAX.
4) DRAWING CONFORMS TO JEDEC MO-220, VARIATION VEED-4
5) DRAWING IS NOT TO SCALE.

MPS Proprietary Information. Patent Protected. Unauthorized Photocopy and Duplication Prohibited.
© 2021 MPS. All Rights Reserved.

CARRIER INFORMATION

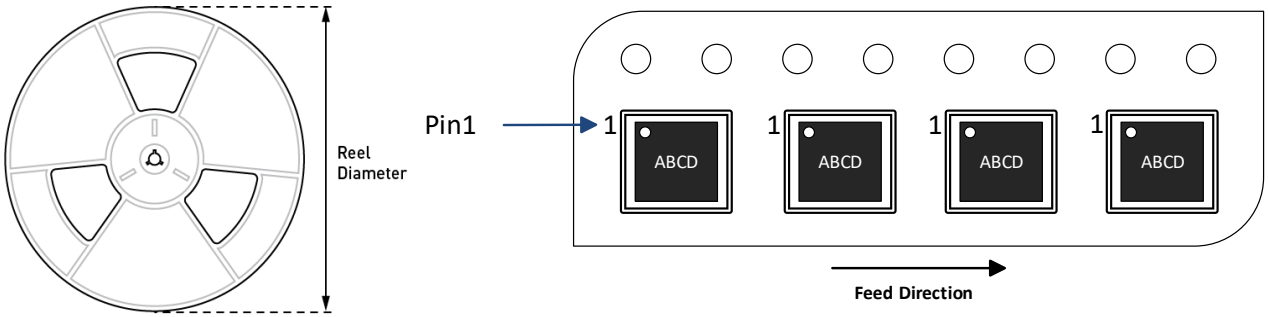

Part Number	Package Description	Quantity/ Reel	Quantity/ Tube	Quantity/ Tray	Reel Diameter	Carrier Tape Width	Carrier Tape Pitch
MA734GQ-Z	QFN-16 (3mmx3mm)	5000	N/A	N/A	N/A	13in	12mm

MPS Proprietary Information. Patent Protected. Unauthorized Photocopy and Duplication Prohibited.
© 2021 MPS. All Rights Reserved.

REVISION HISTORY

Revision #	Revision Date	Description	Pages Updated
1.0	5/27/2021	Initial Release	-

NOTICE: The information in this document is subject to change without notice. Users should warrant and guarantee that third-party Intellectual Property rights are not infringed upon when integrating MPS products into any application. MPS will not assume any legal responsibility for any said applications.

MPS Proprietary Information. Patent Protected. Unauthorized Photocopy and Duplication Prohibited.
© 2021 MPS. All Rights Reserved.