NextGen Components,Inc.

PART CODE: 1206B475K100PB

SPECIFICATION SHEET

SPECIFICATION SHEET NO.	Q0608- 1206B475K100PB
DATE	June 08, 2023
REVISION	A2
DESCRIPITION	Multilayer Ceramic Chip Capacitors 1206 (3216 Metric) Series, L3.20*W1.60*H1.60mm, Thickness: 1.90mm Max. Dielectric X7R, Capacitance 4.7μF, Tolerance ±10%, Rated Voltage 10V, Operating Temp. Range -55°C ~+125°C Package in Tape/Reel, 2,000pcs/Reel RoHS/RoHS III compliant
CUSTOMER	
CUSTOMER PART NUMBER	
CROSS REF. PART NUMBER	
ORIGINAL PART NUMBER	Aillen 1206B475K100PB
PART CODE	1206B475K100PB

VENDOR APPROVE	
Issued/Checked/Approved	  
DATE: June 08， 2023	

CUSTOMER APPROVE
DATE:

NextGen Components, Inc. sales@NextGenComponent.com www.NextGenComponent.com

NextGen Components,Inc.

PART CODE: **1206B475K100PB**

MULTILAYER CERAMIC CHIP CAPACITORS 1206 SERIES

MAIN FEATURE

MLCC consists of a conducting material and electrodes. To manufacture a chip-type SMT and achieve miniaturization, high density and high efficiency, ceramic condensers are used. MLCC is made by NP0, X7R, X6S, X5R and Y5V dielectric material and which provides product with high electrical precision, stability and reliability.

MAIN FEATURE

• RoHS III Compliant • Wide Operating Temperature Range -55~+125℃ • High capacitance in given case size

• A wide selection of sizes is available (0201 to 1812) • Capacitor with lead-free termination (pure Tin)

APPLICATION

• General Digital Circuit • Power Supply by pass capacitors • Consumer Electronics • Telecommunication

RFQ
Request For Quotation

PART CODE GUIDE

Code	Name	Key Specification Option
1206	Size	0201 (0603): L0.60*W0.30mm; 0402 (1005): L1.00*W0.50mm 0603 (1608): L1.60*W0.80mm; 0805 (2012): L2.00*W1.25mm **1206 (3216:) L3.20*W1.60mm;** 1210 (3225): L3.20*W2.50mm 1812 (4532): L4.50*W3.20mm
B	Dielectric	N: NP0 (C0G); **B: X7R;** Y: Y5V; W: X5R; S: X6S
475	Capacitance	Two significant digits followed by number of Zero, The 3rd digit signifies the multiplying factor, and letter R is decimal point. 6R8: 6.8pF; 8R2: 8.2pF; **475: 4.7µF;** 105: 1µF
K	Tolerance	A=±0.05pF; B=±0.1pF; C=±0.25pF; D=±0.5pF; F=±1%; G=±2%; J=±5%; **K=±10%** M=±20%; Z=-20/+80%
100	Rated Voltage	Two significant digits followed by No. of zeros. “R” is in place of decimal point. 4R0=4 VDC; 6R3=6.3 VDC; **100=10 VDC;** 160=16 VDC; 250=25 VDC; 500=50 VDC; 101 =100 VDC
P	Thickness	**P: 1.60+0.30/-0.10mm, *See Table 1***
B	Package	K: 0.5 Kpcs/Reel; A: 1Kpcs/Reel; **B: 2Kpcs/Reel;** C: 3Kpcs/Reel; D: 4Kpcs/Reel; E: 15Kpcs/Reel; I: 10Kpcs/Reel; J: 2.5Kpcs/Reel; F: others
	Internal Control	Internal Code: Letter + Number; Blank: N/A;

MULTILAYER CERAMIC CHIP CAPACITORS 1206 SERIES

DIMENSION (Unit: mm)

Image for reference



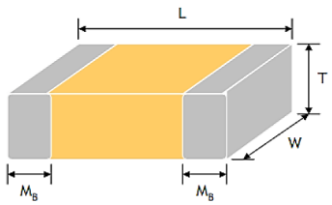

Table 1

Size Code	L	W	T (Symbol)	Soldering Method	M B
0201 (0603)	0.6±0.09	0.30±0.09	0.3±0.09 (L)	R	0.15+0.1/-0.05
0402 (1005)	1.00±0.20	0.50±0.20	0.50±0.05 (N); 0.50±0.20 (H)	R	0.25+0.05/-0.10
0603 (1608)	1.60±0.20	0.80±0.20	0.50±0.20 (H); 0.80±0.10 (S) 0.85±0.15 (B); 0.80±0.20 (X)	R/W	0.40±0.15
0805 (2012)	2.00±0.20	1.25±0.20	0.50±0.20 (H); 0.60±0.10 (A) 0.85±0.15 (B); 0.80±0.20 (X) 1.25±0.20 (C)	H & C: R A, X & B: R/W	0.50±0.20
1206 (3216)	3.20±0.30	1.60±0.30	0.85±0.15 (B); 0.95±0.10 (I) 1.25±0.20 (C); 1.15±0.20 (J) 1.60±0.20 (D); 1.60+0.30/-0.10 (P)	B: R/W C, D, I, J & P: R	0.60±0.20 0.50±0.25
1210 (3225)	3.20±0.40	2.50±0.30	0.85±0.15 (B); 0.95±0.10 (I) 1.25±0.20 (C); 1.60±0.20 (D); 2.00±0.20 (K); 2.50±0.30 (M)	R	0.75±0.25
1812 (4532)	4.50±0.40	3.20±0.40	1.25±0.20 (C); 1.60±0.20 (D); 2.00±0.20 (K); 2.50±0.30 (M) 2.80±0.30 (U)	R	0.75±0.25 0.50±0.25*

MULTILAYER CERAMIC CHIP CAPACITORS 1206 SERIES

GENERAL ELECTRONICAL CHARACTERISTICS

Table 2

Dielectric	NP0	X7R	Y5V	X5R	X6S
Size	0201, 0402, 0603, 0805, 1206, 1210, 1812				
Capacitance range*	0.1pF to 0.1μF	100pF to 47μF	0.01μF to 100μF	100pF to 220μF	0.1μF to 100μF
Capacitance Tolerance	Cap.≦5pF (Note #1): A (±0.05pF), B (±0.1pF), C (±0.25pF) 5pF<Cap<10pF: C (±0.25pF), D (±0.5pF) Cap≧10pF: F (±1%), G (±2%), J (±5%), K (±10%)	J (±5%), K (±10%), M (±20%)	M (±20%), Z (-20/+80%)	K (±10%), M (±20%)	K (±10%), M (±20%)
Rated Voltage	10V, 16V, 25V, 50V,100V	6.3V, 10V, 16V, 25V, 50V, 100V			
Operating Temperature	-55 ~+125°C		-25 ~+85°C	-55 ~+85°C	-55~+105°C
Capacitance Characteristic	±30ppm	±15%	+30/-80%	±15%	±22%
Termination	Ni/Sn (lead-free termination)				

Note:

1) #1: NP0, 0.1pF product only provide B tolerance; 0603N0R4 provide B&C tolerance; 0603N0R3 only provide C tolerance.
2) * Measured at the condition of 30~70% related humidity.
3) NP0: Apply 1.0±0.2Vrms, 1.0MHz±10% for Cap≦1000pF and 1.0±0.2Vrms, 1.0kHz±10% for Cap>1000pF, 25°C at ambient temperature.
4) X7R/X6S/X5R/X6S: Please refer to “Reliability test conditions and requirements” for detail.
5) Y5V: Apply 1.0±0.2Vrms, 1.0kHz±10%, at 20°C ambient temperature.
6) ** Preconditioning for Class II MLCC: Perform a heat treatment at 150±10°C for 1 hour and then leave in ambient condition for 24±2 hours before measurement.

X7R

Table 3

Rated vol.	D.F. ≦	Exception of D.F. ≦	
≧100V	≦ 2.5%	≦ 3%	1206 ≧ 0.47μF
		≦ 5%	0603 ≧ 0.068μF; 0805 > 0.1μF; 1206 ≧ 1μF; 1210 ≧ 2.2μF;
		≦ 10%	0805 > 0.22μF; 1210 ≧ 3.3μF
50V	≦ 2.5%	≦3%	0201(50V); 0603≧0.047μF; 0805≧0.18μF; 1206≧0.47μF
		≦5%	0201≧0.01uF; 1210≧4.7μF
		≦10%	0402≧0.012μF; 0603>0.1μF; 0805/X7R>0.47μF; 1206≧2.2μF; 1210≧10μF;
35V	≦ 3.5%	≦10%	0603≧1μF; 0805≧2.2μF; 1206≧2.2μF; 1210≧10μF
25V	≦ 3.5%	≦5%	0201≧0.01μF; 0805≧1μF; 1210/X7R≧10μF
		≦7%	0603≧0.33μF
		≦10%	0201≧0.1μF; 0402/X7R≧0.056μF; 0603≧0.47μF; 0805≧2.2μF; 1206≧4.7μF; 1210≧22μF
		≦12.5%	0402≧0.47μF
16V	≦3.5%	≦5%	0201≧0.01μF; 0402≧0.033μF; 0603≧0.15μF; 0805≧0.68μF; 1206≧2.2μF; 1210≧4.7μF
		≦10%	0201/X7R≧0.022μF; 0402≧ 0.22uF; 0603>0.47μF; 0805≧2.2μF; 1206≧4.7μF; 1210≧22μF;
10V	≦ 5.0%	≦10%	0201≧0.012μF;0402≧0.22μF; 0603≧0.33μF; 0805≧2.2μF; 1206≧2.2μF;1210≧22μF
		≦15%	0201≧0.1μF; 0402≧1μF
6.3V	≦ 10%	≦15%	0201≧0.1μF; 0402≧1μF; 0603≧10μF; 0805≧4.7μF; 1206≧47μF 1210 ≧100μF
		≦20%	0402≧2.2μF
4V	≦15%	-	-

X5R

Table 4

Rated vol.	D.F. ≦	Exception of D.F. ≦	
≧100V	≦ 2.5%	≦3%	1206 ≧ 0.47μF
		≦ 5%	0603 ≧ 0.068μF; 0805 > 0.1μF; 1206 ≧ 1μF; 1210 ≧ 2.2μF;
		≦10%	0805 > 0.22μF; 1210 ≧ 3.3μF
50V	≦ 2.5%	≦3%	0201(50V); 0603≧0.047μF; 0805≧0.18μF; 1206≧0.47μF
		≦5%	0201≧0.01uF; 1210≧4.7μF
		≦10%	0402≧0.012μF; 0603>0.1μF; 0805≧1μF; 1206≧2.2μF;1210≧10μF;
35V	≦ 3.5%	≦10%	0603≧1μF; 0805≧2.2μF; 1206≧2.2μF; 1210≧10μF
25V	≦ 3.5%	≦5%	0201≧0.01μF; 0805≧1μF; 1210/X5R≧10μF
		≦7%	0603≧0.33μF
		≦10%	0201≧0.1μF; 0402≧0.10μF; 0603≧0.47μF; 0805≧2.2μF; 1206≧4.7μF; 1210/X5R≧10μF;
		≦12.5%	0402≧0.47μF
16V	≦ 3.5%	≦5%	0201≧0.01μF; 0402≧0.033μF; 0603≧0.15μF; 0805≧0.68μF; 1206≧2.2μF; 1210≧4.7μF
		≦10%	0201≧0.1uF; 0402≧ 0.22uF; 0603>0.47μF; 0805≧2.2μF; 1206≧4.7μF; 1210≧22μF
10V	≦ 5.0%	≦10%	0201≧0.012μF; 0402≧0.22μF; 0603≧0.33μF; 0805≧2.2μF; 1206≧2.2μF; 1210≧22μF
		≦15%	0201≧0.1μF; 0402≧1μF
6.3V	≦ 10%	≦15%	0201≧0.1μF; 0402≧1μF; 0603≧10μF; 0805≧4.7μF; 1206≧47μF 1210 ≧100μF
		≦20%	0402≧2.2μF
4V	≦15%	-	-

Y5V

Table 5

Rated vol.	D.F. ≦	Exception of D.F. ≦	
≧50V	≦5%	≦7%	0603≧0.1μF; 0805≧0.47μF; 1206≧4.7μF
		≦12.5%	1210≧6.8μF
35V	≦7%	-	-
25V	≦5%	≦7%	0402≧0.047μF; 0603≧0.1μF; 0805≧0.33μF; 1206≧1μF; 1210≧4.7μF
		≦9%	0402≧0.068μF; 0603≧0.47μF; 1206≧4.7μF; 1210≧22μF
16V (C<1.0μF)	≦7%	≦9%	0402≧0.068μF; 0603≧0.68μF
		≦12.5%	0402≧0.22μF
16V (C≧1.0μF)	≦9%	≦12.5%	0603≧2.2μF; 0805≧3.3μF; 1206≧10μF; 1210≧22μF; 1812≧47μF
10V	≦12.5%	≦20%	0402≧0.47μF
6.3V	≦20%	-	-

X6S

Table 6

Rated vol.	D.F. ≦	Exception of D.F.≦	
≧100V	≦ 2.5%	≦ 3%	1206 ≧ 0.47μF
		≦ 5%	0603 ≧ 0.068μF; 0805 > 0.1μF; 1206 ≧ 1μF; 1210 ≧ 2.2μF;
		≦ 10%	0805 > 0.22μF; 1210 ≧ 3.3μF
50V	≦ 2.5%	≦3%	0201(50V); 0603≧0.047μF; 0805≧0.18μF; 1206≧0.47μF
		≦5%	0201≧0.01uF; 1210≧4.7μF
		≦10%	0402≧0.012μF; 0603>0.1μF; 0805≧1μF; 1206≧2.2μF; 1210≧10μF;
35V	≦ 3.5%	≦10%	0603≧1μF; 0805≧2.2μF; 1206≧2.2μF; 1210≧10μF
25V	≦ 3.5%	≦5%	0201≧0.01μF; 0805≧1μF; 1210/X6S≧10μF
		≦7%	0603≧0.33μF
		≦10%	0201≧0.1μF; 0402≧0.10μF; 0603≧0.47μF; 0805≧2.2μF; 1206≧4.7μF; 1210≧22μF;
		≦12.5%	0402≧0.47μF
16V	≦ 3.5%	≦5%	0201≧0.01μF; 0402≧0.033μF; 0603≧0.15μF; 0805≧0.68μF; 1206≧2.2μF; 1210≧4.7μF
		≦10%	0201≧0.1uF; 0402≧ 0.22uF; 0603>0.47μF; 0805≧2.2μF; 1206≧4.7μF; 1210≧22μF
10V	≦ 5.0%	≦10%	0201≧0.012μF; 0402≧0.22μF; 0603≧0.33μF; 0805≧2.2μF; 1206≧2.2μF; 1210≧22μF
		≦15%	0201≧0.1μF; 0402≧1μF
6.3V	≦ 10%	≦15%	0201≧0.1μF; 0402/X6S≧0.47μF; 0603≧10μF; 0805≧4.7μF; 1206≧47μF 1210 ≧100μF
		≦20%	0402≧2.2μF
4V	≦15%	-	-

MULTILAYER CERAMIC CHIP CAPACITORS 1206 SERIES

CAPACITANCE RANGE - NP0 DIELECTRIC 0201, 0402, 0603 SIZES

Table 7-A

Size	0201			0402					0603				
VDC (V)	16	25	50	10	16	25	50	100	10	16	25	50	100
0.1pF (0R1)	L	L	L	H	H	H	H						
0.2pF (0R2)	L	L	L	H	H	H	H						
0.3pF (0R3)	L	L	L	H	H	H	H						
0.4pF (0R4)	L	L	L	H	H	H	H						
0.5pF (0R5)	L	L	L	H	H	H	H	H	S	S	S	S	S
0.6pF (0R6)	L	L	L	H	H	H	H	H	S	S	S	S	S
0.7pF (0R7)	L	L	L	H	H	H	H	H	S	S	S	S	S
0.8pF (0R8)	L	L	L	H	H	H	H	H	S	S	S	S	S
0.9pF (0R9)	L	L	L	H	H	H	H	H	S	S	S	S	S
1.0pF (1R0)	L	L	L	H	H	H	H	H	S	S	S	S	S
1.2pF (1R2)	L	L	L	H	H	H	H	H	S	S	S	S	S
1.5pF (1R5)	L	L	L	H	H	H	H	H	S	S	S	S/B	S
1.6pF (1R6)							H						
1.8pF (1R8)	L	L	L	H	H	H	H	H	S	S	S	S	S
2.0pF (2R0)	L	L	L	H	H	H	H	H	S	S	S	S	S
2.2pF (2R2)	L	L	L	H	H	H	H	H	S	S	S	S	S
2.7pF (2R7)	L	L	L	H	H	H	H	H	S	S	S	S	S
3.0pF (3R0)	L	L	L	H	H	H	H	H	S	S	S	S	S
3.3pF (3R3)	L	L	L	H	H	H	H	H	S	S	S	S	S
3.9pF (3R9)	L	L	L	H	H	H	H	H	S	S	S	S/B	S
4.0pF (4R0)	L	L	L	H	H	H	H	H	S	S	S	S	S
4.7pF (4R7)	L	L	L	H	H	H	H	H	S	S	S	S/B	S
5.0pF (5R0)	L	L	L	H	H	H	H	H	S	S	S	S	S
5.6pF (5R6)	L	L	L	H	H	H	H	H	S	S	S	S/B	S
6.0pF (6R0)	L	L	L	H	H	H	H	H	S	S	S	S	S
6.8pF (6R8)	L	L	L	H	H	H	H	H	S	S	S	S	S
7.0pF (7R0)	L	L	L	H	H	H	H	H	S	S	S	S/B	S
8.0pF (8R0)	L	L	L	H	H	H	H	H	S	S	S	S	S
8.2pF (8R2)	L	L	L	H	H	H	H	H	S	S	S	S/B	S
9.0pF (9R0)	L	L	L	H	H	H	H	H	S	S	S	S	S

MULTILAYER CERAMIC CHIP CAPACITORS 1206 SERIES

CAPACITANCE RANGE - NP0 DIELECTRIC 0201, 0402, 0603 SIZES

Table 7-B

Size	0201			0402					0603				
VDC (V)	16	25	50	10	16	25	50	100	10	16	25	50	100
10pF (100)	L	L	L	H	H	H	H	H	S	S	S	S	S
12pF (120)	L	L	L	H	H	H	H	H	S	S	S	S	S
15pF (150)	L	L	L	H	H	H	H	H	S	S	S	S/B	S
18pF (180)	L	L	L	H	H	H	H	H	S	S	S	S/B	S
22pF (220)	L	L	L	H	H	H	H/N	H	S	S	S	S/B	S
27pF (270)	L	L	L	H	H	H	H	H	S	S	S	S	S
30pF (300)						H							
33pF (330)	L	L	L	H	H	H	H	H	S	S	S/B	S/B	S
39pF (390)	L	L	L	H	H	H	H	H	S	S	S	S	S
47pF (470)	L	L	L	H	H	H	H	H	S	S	S	S/B	S
56pF (560)	L	L	L	H	H	H	H	H	S	S	S	S	S
68pF (680)	L	L	L	H	H	H	H	H	S	S	S	S	S
82pF (820)	L	L	L	H	H	H	H	H	S	S	S	S	S
100pF (101)	L	L	L	H	H	H	H/N	H	S	S	S	S/B	S
120pF (121)	L	L	L	H	H	H	H	H	S	S	S	S/B	S
150pF (151)	L	L	L	H	H	H	H	H	S	S	S	S	S
180pF (181)				H	H	H	H	H	S	S	S	S	S
220pF (221)				H	H	H	H	H	S	S	S	S	S
270pF (271)	L			H	H	H	H		S	S	S	S/B	S
330pF (331)	L			H	H	H	H		S	S	S	S/B	S
390pF (391)	L			H	H	H	H		S	S	S	S	S
470pF (471)	L			H	H	H	H		S	S	S	S	S
560pF (561)	L			H	H	H	H		S	S	S	S	S
680pF (681)				H	H	H	H		S	S	S	S	S
820pF (821)				H	H	H	H		S	S	S	S	S
1,000pF (102)				H	H	H	H		S	S	S/B	S	S
1,200pF (122)									X	X	X	X	X
1,500pF (152)									X	X	X	X	X
1,800pF (182)									X	X	X	X	

MULTILAYER CERAMIC CHIP CAPACITORS 1206 SERIES

CAPACITANCE RANGE - NP0 DIELECTRIC 0603 SIZES

Table 7-C

Size	0603			
VDC (V)	10	16	25	50
2,200pF (222)	X	X	X	X/B
2,700pF (272)	X	X	X	X/B
3,300pF (332)	X	X	X	X
3,900pF (392)	X	X	X	X
4,700pF (472)	X	X	X	X
5,600pF (562)	X	X	X	X
6,800pF (682)	X	X	X	X
8,200pF (822)	X	X	X	X
0.010µF (103)	X	X	X	X

CAPACITANCE RANGE - NP0 DIELECTRIC 0805, 1206 SIZES

Table 7-D

Size	0805					1206				
VDC (V)	10	16	25	50	100	10	16	25	50	100
0.5pF (0R5)	A	A	A	A	A					
0.6pF (0R6)	A	A	A	A	A					
0.7pF (0R7)	A	A	A	A	A					
0.8pF (0R8)	A	A	A	A	A					
0.9pF (0R9)	A	A	A	A	A					
1.0pF (1R0)	A	A	A	A	A				B	
1.2pF (1R2)	A	A	A	A	A	B	B	B	B	B
1.5pF (1R5)	A	A	A	A	A	B	B	B	B	B
1.8pF (1R8)	A	A	A	A	A	B	B	B	B	B
2.0pF (2R0)	A	A	A	A	A					
2.2pF (2R2)	A	A	A	A	A	B	B	B	B	B
2.7pF (2R7)	A	A	A	A	A	B	B	B	B	B
3.0pF (3R0)	A	A	A	A	A					
3.3pF (3R3)	A	A	A	A	A	B	B	B	B	B
3.9pF (3R9)	A	A	A	A	A	B	B	B	B	B
4.0pF (4R0)	A	A	A	A	A					

MULTILAYER CERAMIC CHIP CAPACITORS 1206 SERIES

CAPACITANCE RANGE - NP0 DIELECTRIC 0805, 1206 SIZES

Table 7-E

Size	0805					1206				
VDC (V)	10	16	25	50	100	10	16	25	50	100
4.7pF (4R7)	A	A	A	A	A	B	B	B	B	B
5.0pF (5R0)	A	A	A	A	A					
5.6pF (5R6)	A	A	A	A	A	B	B	B	B	B
6.0pF (6R0)	A	A	A	A	A					
6.8pF (6R8)	A	A	A	A	A	B	B	B	B	B
7.0pF (7R0)	A	A	A	A	A	B	B	B	B	B
8.0pF (8R0)	A	A	A	A	A					
8.2pF (8R2)	A	A	A	A	A	B	B	B	B	B
9.0pF (9R0)	A	A	A	A	A					
10pF (100)	A	A	A	A	A	B	B	B	B	B
12pF (120)	A	A	A	A	A					
15pF (150)	A	A	A	A	A	B	B	B	B	B
18pF (180)	A	A	A	A	A	B	B	B	B	B
22pF (220)	A	A	A	A	A	B	B	B	B	B
27pF (270)	A	A	A	A	A	B	B	B	B	B
33pF (330)	A	A	A	A	A	B	B	B	B	B
39pF (390)	A	A	A	A	A	B	B	B	B	B
47pF (470)	A	A	A	A	A	B	B	B	B	B
56pF (560)	A	A	A	A	A	B	B	B	B	B
68pF (680)	A	A	A	A	A	B	B	B	B	B
82pF (820)	A	A	A	A	A	B	B	B	B	B
100pF (101)	A	A	A	A	A	B	B	B	B	B
120pF (121)	A	A	A	A	A	B	B	B	B	B
150pF (151)	A	A	A	A	A	B	B	B	B	B
180pF (181)	A	A	A	A	A	B	B	B	B	B
220pF (221)	A	A	A	A	A	B	B	B	B	B
270pF (271)	A	A	A	A	A	B	B	B	B	B
330pF (331)	A	A	A	A	A	B	B	B	B	B
390pF (391)	B	B	B	B	B	B	B	B	B	B
470pF (471)	B	B	B	B	B					

MULTILAYER CERAMIC CHIP CAPACITORS 1206 SERIES

CAPACITANCE RANGE - NP0 DIELECTRIC 0805, 1206 SIZES

Table 7-F

Size	0805					1206				
VDC (V)	10	16	25	50	100	10	16	25	50	100
560pF (561)	B	B	B	B	B	B	B	B	B	B
680pF (681)	B	B	B	B	B	B	B	B	B	B
820pF (821)	B	B	B	B	B	B	B	B	B	B
1,000pF (102)	B	B	B	B	B	B	B	B	B	B
1,200pF (122)	B	B	B	B	B	B	B	B	B	B
1,500pF (152)	B	B	B	B	B	B	B	B	B	B
1,800pF (182)	B	B	B	B	B	B	B	B	B	B
2,200pF (222)	B	B	B	B	B	B	B	B	B	B
2,700pF (272)	C	C	C	C	C	B	B	B	B	B
3,300pF (332)	C	C	C	C	C	B	B	B	B	B

CAPACITANCE RANGE - NP0 DIELECTRIC 0805, 1206 SIZES

Table 7-G

Size	0805					1206				
VDC (V)	10	16	25	50	100	10	16	25	50	100
3,900pF (392)	C	C	C	C	C	B	B	B	B	B
4,700pF (472)	C	C	C	C	C	B	B	B	B	B
5,600pF (562)	C	C	C	C	C	B	B	B	B	B
6,800pF (682)	C	C	C	C	C	I	I	I	I	I
8,200pF (822)	C	C	C	C		C	C	C	C	C
0.010µF (103)	C	C	C	C		C	C	C	C	C
0.012µF (123)	B	B	B	B		P	P	P	P	P
0.015µF (153)						P	P	P	P	P
0.018µF (183)	C	C	C	C		P	P	P	P	P
0.022µF (223)	C	C	C	C		P	P	P	P	P
0.027µF (273)						P	P	P	P	
0.033µF (333)						P	P	P	P	
0.039µF (393)						P	P	P	P	
0.047µF (473)						J	J	J	J	
0.056µF (563)						J	J	J	J	
0.068µF (683)						D	D	D	D	

MULTILAYER CERAMIC CHIP CAPACITORS 1206 SERIES

CAPACITANCE RANGE - NP0 DIELECTRIC 0805, 1206 SIZES

Table 7-H

Size	0805					1206				
VDC (V)	10	16	25	50	100	10	16	25	50	100
0.082µF (823)						D	D	D	D	
0.1µF (104)						D	D	D	D	

CAPACITANCE RANGE - NP0 DIELECTRIC 1210, 1812 SIZES

Table 7-I

Size	1210					1812		
VDC (V)	10	16	25	50	100	16	50	100
10pF (100)	I	I	I	I	I	C	C	C
15pF (150)	I	I	I	I	I	C	C	C
18pF (180)	I	I	I	I	I	C	C	C
22pF (220)	I	I	I	I	I	C	C	C
27pF (270)	I	I	I	I	I	C	C	C
33pF (330)	I	I	I	I	I	C	C	C
39pF (390)	I	I	I	I	I	C	C	C
47pF (470)	I	I	I	I	I	C	C	C
56pF (560)	I	I	I	I	I	C	C	C
68pF (680)	I	I	I	I	I	C	C	C
82pF (820)	I	I	I	I	I	C	C	C
100pF (101)	I	I	I	I	I	C	C	C
120pF (121)	I	I	I	I	I	C	C	C
150pF (151)	I	I	I	I	I	C	C	C
180pF (181)	I	I	I	I	I	C	C	C
220pF (221)	I	I	I	I	I	C	C	C
270pF (271)	I	I	I	I	I	C	C	C
330pF (331)	I	I	I	I	I	C	C	C
390pF (391)	I	I	I	I	I	C	C	C
560pF (561)	I	I	I	I	I	C	C	C
680pF (681)	I	I	I	I	I	C	C	C
820pF (821)	I	I	I	I	I	C	C	C
1,000pF (102)	I	I	I	I	I	C	C	C
1,200pF (122)	I	I	I	I	I	C	C	C

MULTILAYER CERAMIC CHIP CAPACITORS 1206 SERIES

CAPACITANCE RANGE - NP0 DIELECTRIC 1210, 1812 SIZES

Table 7-J

Size	1210					1812		
VDC (V)	10	16	25	50	100	16	50	100
1,500pF (152)	I	I	I	I	I	C	C	C
1,800pF (182)	I	I	I	I	I	C	C	C
2,200pF (222)	I	I	I	I	I	C	C	C
2,700pF (272)	I	I	I	I	I	C	C	C
3,300pF (332)	I	I	I	I	I	C	C	C
3,900pF (392)	I	I	I	I	I	C	C	C
4,700pF (472)	I	I	I	I	I	C	C	C
5,600pF (562)	I	I	I	I	I	C	C	C
6,800pF (682)	I	I	I	I	I	C	C	C
8,200pF (822)	I	I	I	I	I	C	C	C
0.010µF (103)	I	I	I	I	I	C	C	C
0.012µF (123)	C	C	C	C	C	C	C	C
0.015µF (153)	C	C	C	C	C	C	C	C
0.018µF (183)		K	K	K	K	C	C	C
0.022µF (223)		K	K	K	K	C	C	C
0.027µF (273)		K	K	K	K	C	C	C
0.033µF (333)		K	K	K	K	C	C	C
0.039µF (393)		K	K	K	K	M	M	M
0.047µF (473)		K	K	K	K	M	M	M
0.056µF (563)						M	M	M
0.068µF (683)						M	M	M
0.082µF (823)						M	M	M
0.1µF (104)						M	M	M

Note: The letter in cell is expressed the symbol of product thickness.

MULTILAYER CERAMIC CHIP CAPACITORS 1206 SERIES

CAPACITANCE RANGE – X7R DIELECTRIC 0201, 0402 SIZES

Table 8-A

Size	0201					0402					
VDC (V)	6.3	10	16	25	50	6.3	10	16	25	50	100
100pF (101)	L	L	L	L	L	H	H	H	H	H	H
120pF (121)	L	L	L	L	L	H	H	H	H	H	H
150pF (151)	L	L	L	L	L	H	H	H	H	H	H
180pF (181)	L	L	L	L	L	H	H	H	H	H	H
220pF (221)	L	L	L	L	L	H	H	H	H	H	H
270pF (271)	L	L	L	L	L	H	H	H	H	H	H
330pF (331)	L	L	L	L	L	H	H	H	H	H	H
390pF (391)	L	L	L	L	L	H	H	H	H	H	H
470pF (471)	L	L	L	L	L	H	H	H	H	H	H
560pF (561)	L	L	L	L	L	H	H	H	H	H	H
680pF (681)	L	L	L	L	L	H	H	H	H	H	H
820pF (821)	L	L	L	L	L	H	H	H	H	H	H
1,000pF (102)	L	L	L	L	L	H	H	H	H	H	H
1,200pF (122)	L	L	L	L		H	H	H	H	H	H
1,500pF (152)	L	L	L	L		H	H	H	H	H	H
1,800pF (182)	L	L	L	L		H	H	H	H	H	H
2,200pF (222)	L	L	L	L		H	H	H	H	H	H
2,700pF (272)	L	L	L	L		H	H	H	H	H	H
3,300pF (332)	L	L	L	L		H	H	H	H	H	H
3,900pF (392)	L	L	L	L		H	H	H	H	H	H
4,700pF (472)	L	L	L	L		H	H	H	H	H	H
5,600pF (562)	L	L	L	L		H	H	H	H	H	
6,800pF (682)	L	L	L			H	H	H	H	H	
8,200pF (822)	L	L	L			H	H	H	H	H	
0.010µF (103)	L	L	L			H	H	H	H	H	
0.012µF (123)						H	H	H	H	H	
0.015µF (153)						H	H	H	H	H	
0.018µF (183)						H	H	H	H	H	
0.022µF (223)						H	H	H	H	H	

MULTILAYER CERAMIC CHIP CAPACITORS 1206 SERIES

CAPACITANCE RANGE – X7R DIELECTRIC 0402 SIZES

Table 8-B

Size	0402				
VDC (V)	6.3	10	16	25	50
0.027µF (273)	H	H	H	H	H
0.033µF (333)	H	H	H	H	H
0.039µF (393)	H	H	H	H	H
0.047µF (473)	H	H	H	H	H
0.056µF (563)	H	H	H	H	H
0.068µF (683)	H	H	H	H	H
0.082µF (823)	H	H	H	H	H
0.10µF (104)	H	H	H	H	H
0.22µF (224)	H	H	H	H	
0.47µF (474)	H	H			
1.0µF (105)	H	H			

CAPACITANCE RANGE – X7R DIELECTRIC 0603, 0805 SIZES

Table 8-C

Size	0603						0805					
VDC (V)	6.3	10	16	25	50	100	6.3	10	16	25	50	100
100pF (101)	S	S	S	S/B	S/B	S	B	B	B	B	B	B
120pF (121)	S	S	S	S	S	S	B	B	B	B	B	B
150pF (151)	S	S	S	S	S	S	B	B	B	B	B	B
180pF (181)	S	S	S	S	S	S/B	B	B	B	B	B	B
220pF (221)	S	S	S	S	S/B	S	B	B	B	B	B	B
270pF (271)	S	S	S	S	S	S	B	B	B	B	B	B
330pF (331)	S	S	S	S	S	S	B	B	B	B	B	B
390pF (391)	S	S	S	S	S	S	B	B	B	B	B	B
470pF (471)	S	S	S	S	S/B	S	B	B	B	B	B	B
560pF (561)	S	S	S	S	S	S	B	B	B	B	B	B
680pF (681)	S	S	S	S	S	S	B	B	B	B	B	B
820pF (821)	S	S	S	S	S	S	B	B	B	B	B	B
1,000pF (102)	S	S	S	S/B	S/B	S/B	B	B	B	B	B	B
1,200pF (122)	S	S	S	S	S	S	B	B	B	B	B	B
1,500pF (152	S	S	S	S/B	S	S	B	B	B	B	B	B

MULTILAYER CERAMIC CHIP CAPACITORS 1206 SERIES

CAPACITANCE RANGE – X7R DIELECTRIC 0603, 0805 SIZES

Table 8-D

Size	0603						0805					
VDC (V)	6.3	10	16	25	50	100	6.3	10	16	25	50	100
1,800pF (182)	S	S	S	S	S	S	B	B	B	B	B	B
2,200pF (222)	S	S	S	S	S/B	S	B	B	B	B	B	B
2,700pF (272)	S	S	S	S	S/B	S	B	B	B	B	B	B
3,300pF (332)	S	S	S	S	S	S	B	B	B	B	B	B
3,900pF (392)	S	S	S	S	S	S	B	B	B	B	B	B
4,700pF (472)	S	S	S	S	S	S	B	B	B	B	B	B
5,600pF (562)	S	S	S	S	S	S	B	B	B	B	B	B
6,800pF (682)	S	S	S	S/B	S	S	B	B	B	B	B	B
8,200pF (822)	S	S	S	S	S	S	B	B	B	B	B	B
0.010µF (103)	S	S	S	S/B	S/B	S	B	B	B	B	B	B
0.012µF (123)	S	S	S	S	S	X	B	B	B	B	B	B
0.015µF (153)	S	S	S	S/B	S/B	X	B	B	B	B	B	B
0.018µF (183)	S	S	S	S	S	X	B	B	B	B	B	B
0.022µF (223)	S	S	S	S	S/B	X	B	B	B	B	B	B
0.027µF (273)	S	S	S	S	S/B	X	B	B	B	B	B	C
0.033µF (333)	S	S	S	S	X/B	X	B	B	B	B	B	C
0.039µF (393)	S	S	S	S	X	X	B	B	B	B	B	C
0.047µF (473)	S	S	S	S	X	X	B	B	B	B	B	C
0.056µF (563)	S	S	S	S	X	X	B	B	B	B	B	C
0.068µF (683)	S	S	S	S	X/B	X	B	B	B	B	B	C
0.082µF (823)	S	S	S	S	X	X	B	B	B	B	B	C
0.10µF (104)	S	S	S/B	S/B	X	X	B	B	B	B	B	C
0.12µF (124)	S	S	S	X			B	B	B	B	C	C
0.15µF (154)	S	S	S/B	X			C	C	C	C	C	C
0.18µF (184)	S	S	S	X			C	C	C	C	C	C
0.22µF (224)	S	S	S/B	X/B	X		C	C	C	C	C	C
0.27µF (274)	X	X	X	X			C	C	C	C	C	
0.33µF (334)	X	X	X	X			C	C	C	C	C	
0.39µF (394)	X	X	X	X			C	C	C	C	C	

MULTILAYER CERAMIC CHIP CAPACITORS 1206 SERIES

CAPACITANCE RANGE – X7R DIELECTRIC 0603, 0805 SIZES

Table 8-E

Size	0603					0805					
VDC (V)	6.3	10	16	25	50	6.3	10	16	25	50	100
0.47µF (474)	X	X	X/B	X/B	X	C	C	C	C	C	C
0.56µF (564)	X	X	X			C	C	C	C		
0.68µF (684)	X	X	X			C	C	C	C		
0.82µF (824)	X	X	X			C	C	C	C		
1.0µF (105)	X	X	X	X	X	C	C	C	C	C	
1.5µF (155)						C	C	C	C		
2.2µF (225)	X	X/B	X			C	C	C	C	C	
4.7µF (475)	X	X	X			C	C	C	C		
10µF (106)						C*	C*	C*			

CAPACITANCE RANGE – X7R DIELECTRIC 1206, 1210 SIZES

Table 8-F

Size	1206						1210				
VDC (V)	6.3	10	16	25	50	100	10	16	25	50	100
150pF (151)	B	B	B	B	B	B					
180pF (181)	B	B	B	B	B	B					
220pF (221)	B	B	B	B	B	B					
270pF (271)	B	B	B	B	B	B					
330pF (331)	B	B	B	B	B	B					
390pF (391)	B	B	B	B	B	B					
470pF (471)	B	B	B	B	B	B					
560pF (561)	B	B	B	B	B	B					
680pF (681)	B	B	B	B	B	B					
820pF (821)	B	B	B	B	B	B					
1,000pF (102)	B	B	B	B	B	B	I	I	I	I	I
1,200pF (122)	B	B	B	B	B	B	I	I	I	I	I
1,500pF (152	B	B	B	B	B	B	I	I	I	I	I
1,800pF (182)	B	B	B	B	B	B	I	I	I	I	I
2,200pF (222)	B	B	B	B	B	B	I	I	I	I	I
2,700pF (272)	B	B	B	B	B	B	I	I	I	I	I
3,300pF (332)	B	B	B	B	B	B	I	I	I	I	I

MULTILAYER CERAMIC CHIP CAPACITORS 1206 SERIES

CAPACITANCE RANGE – X7R DIELECTRIC 1206, 1210 SIZES

Table 8-G

Size	1206						1210				
VDC (V)	6.3	10	16	25	50	100	10	16	25	50	100
3,900pF (392)	B	B	B	B	B	B	I	I	I	I	I
4,700pF (472)	B	B	B	B	B	B	I	I	I	I	I
5,600pF (562)	B	B	B	B	B	B	I	I	I	I	I
6,800pF (682)	B	B	B	B	B	B	I	I	I	I	I
8,200pF (822)	B	B	B	B	B	B	I	I	I	I	I
0.010µF (103)	B	B	B	B	B	B	I	I	I	I	I
0.012µF (123)	B	B	B	B	B	B	I	I	I	I	I
0.015µF (153)	B	B	B	B	B	B	I	I	I	I	I
0.018µF (183)	B	B	B	B	B	B	I	I	I	I	I
0.022µF (223)	B	B	B	B	B	B	I	I	I	I	I
0.027µF (273)	B	B	B	B	B	B	I	I	I	I	I
0.033µF (333)	B	B	B	B	B	B	I	I	I	I	I
0.039µF (393)	B	B	B	B	B	B	I	I	I	I	I
0.047µF (473)	B	B	B	B	B	B	I	I	I	I	I
0.056µF (563)	B	B	B	B	B	B	I	I	I	I	I
0.068µF (683)	B	B	B	B	B	B	I	I	I	I	I
0.082µF (823)	B	B	B	B	B	C	I	I	I	I	I
0.10µF (104)	B	B	B	B	B	C	I	I	I	I	I
0.12µF (124)	B	B	B	B	B	C	I	I	I	I	I
0.15µF (154)	I	I	I	I	I	D	I	I	I	I	C
0.18µF (184)	I	I	I	I	I	D	I	I	I	I	C
0.22µF (224)	I	I	I	I	I/B	D	I	I	I	I	C
0.27µF (274)	I	I	I	I	C	D	I	I	I	I	D
0.33µF (334)	I	I	I	I	C	D	I	I	I	C	D
0.39µF (394)	I	I	I	J	P	D	I	I	I	C	M
0.47µF (474)	J	J	J	J	P	D	I	I	I	C	M
0.56µF (564)	J	J	J	J	P	P	C	C	C	C	M
0.68µF (684)	J	J	J	J	P	P	C	C	C	C	K
0.82µF (824)	J	J	J	J	P	P	C	C	C	C	K

MULTILAYER CERAMIC CHIP CAPACITORS 1206 SERIES

CAPACITANCE RANGE – X7R DIELECTRIC 1206, 1210 SIZES

Table 8-H

Size	1206						1210				
VDC (V)	6.3	10	16	25	50	100	10	16	25	50	100
1.0µF (105)	J	J	J	J	P	P	C	C	C	C	K
1.5µF (155)	J	J	J	P				D	D	M	M
2.2µF (225)	J	J	J	P	P	P		D	D	M	M
3.3µF (475)	P	P	P	P				D	D	M	
4.7µF (475)	P	P	P	P	P		K	K	K	M	M
10µF (106)	P	P	P	P			K	K	K	M	
22µF (226)	P*	P*	P*				M	M	M		
47µF (476)							M				

CAPACITANCE RANGE – X7R DIELECTRIC 1812 SIZES

Table 8-I

Size	1812					
VDC (V)	6.3	10	16	25	50	100
1,000pF (102)	C	C	C	C	C	C
1,200pF (122)	C	C	C	C	C	C
1,500pF (152	C	C	C	C	C	C
1,800pF (182)	C	C	C	C	C	C
2,200pF (222)	C	C	C	C	C	C
2,700pF (272)	C	C	C	C	C	C
3,300pF (332)	C	C	C	C	C	C
3,900pF (392)	C	C	C	C	C	C
4,700pF (472)	C	C	C	C	C	C
5,600pF (562)	C	C	C	C	C	C
6,800pF (682)	C	C	C	C	C	C
8,200pF (822)	C	C	C	C	C	C
0.010µF (103)	C	C	C	C	C	C
0.012µF (123)	C	C	C	C	C	C
0.015µF (153)	C	C	C	C	C	C
0.018µF (183)	C	C	C	C	C	C

CAPACITANCE RANGE – X7R DIELECTRIC 1812 SIZES

Table 8-J

Size	1812					
VDC (V)	6.3	10	16	25	50	100
0.022µF (223)	C	C	C	C	C	C
0.027µF (273)	C	C	C	C	C	C
0.033µF (333)	C	C	C	C	C	C
0.039µF (393)	C	C	C	C	C	C
0.047µF (473)	C	C	C	C	C	C
0.056µF (563)	C	C	C	C	C	C
0.068µF (683)	C	C	C	C	C	C
0.082µF (823)	C	C	C	C	C	C
0.10µF (104)	C	C	C	C	C	C
0.12µF (124)	C	C	C	C	C	C
0.15µF (154)	C	C	C	C	C	C
0.18µF (184)	C	C	C	C	C	C
0.22µF (224)	C	C	C	C	C	C
0.27µF (274)	C	C	C	C	C	C
0.33µF (334)	C	C	C	C	C	C
0.39µF (394)	C	C	C	C	C	C
0.47µF (474)	C	C	C	C	C	K
0.56µF (564)	C	C	C	C	C	K
0.68µF (684)	C	C	C	C	K	K
0.82µF (824)	C	C	C	C	K	K
1.0µF (105)	C	C	C	C	K	K
1.5µF (155)					K	K
2.2µF (225)					M	M

Note: 1) The letter in cell is expressed the symbol of product thickness. 2) The letter in cell with " * " mark is for "M tolerance" (20%) only

MULTILAYER CERAMIC CHIP CAPACITORS 1206 SERIES

CAPACITANCE RANGE – Y5V DIELECTRIC 0402, 0603 SIZES

Table 9-A

Size	0402					0603				
VDC (V)	6.3	10	16	25	50	6.3	10	16	25	50
0.010µF (103)		H	H	H	H		S	S	S/B	S/B
0.015µF (153)		H	H	H	H		S	S	S	S
0.022µF (223)		H	H	H	H		S	S	S	S
0.033µF (333)		H	H	H	H		S	S	S	S
0.047µF (473)		H	H	H			S	S	S	S
0.068µF (683)		H	H	H			S	S	S	S
0.10µF (104)		H	H	H			S	S	S/B	S/B
0.15µF (154)		H	H				S	S	S	S
0.22µF (224)	H	H	H	H			S	S	S	S
0.33µF (334)	H	H	H				S	S	S	
0.47µF (474)	H	H	H				S	S	X	
0.68µF (684)	H						S	X		
1.0µF (105)	H	H					S	X		
1.5µF (155)							S			
2.2µF (225)						S	S			
4.7µF (475)						X	X			

CAPACITANCE RANGE – Y5V DIELECTRIC 0805, 1206 SIZES

Table 9-B

Size	0805					1206				
VDC (V)	10	16	25	50	100	10	16	25	50	100
0.010µF (103)	A	A	A	A	B	B	B	B	B	B
0.015µF (153)	A	A	A	A	B	B	B	B	B	B
0.022µF (223)	A	A	A	A	B	B	B	B	B	B
0.033µF (333)	A	A	A	A	B	B	B	B	B	B
0.047µF (473)	A	A	A	A	B	B	B	B	B	B
0.068µF (683)	A	A	A	A	B	B	B	B	B	B
0.10µF (104)	A	A	A	A	B	B	B	B	B	B
0.15µF (154)	A	A	A	A		B	B	B	B	I
0.22µF (224)	A	A	A	A		B	B	B	B	I
0.33µF (334)	B	B	B	B		B	B	B	B	

MULTILAYER CERAMIC CHIP CAPACITORS 1206 SERIES

CAPACITANCE RANGE – Y5V DIELECTRIC 0805, 1206 SIZES

Table 9-C

Size	0805					1206			
VDC (V)	6.3	10	16	25	50	10	16	25	50
0.47µF (474)		B	B	B	B	B	B	B	B
0.68µF (684)		B	B	C	C	B	B	B	B
1.0µF (105)		B	B	C	C	I	I	I	I
1.5µF (155)		C	C			I	I	I	
2.2µF (225)		C	C			I	I	I	
3.3µF (335)		C	C			J	J	J	
4.7µF (475)		C	C			J	J	J	
6.8µF (685)		C				J	J		
10µF (106)	C	C	C			J	J		
22µF (226)						P			

CAPACITANCE RANGE – Y5V DIELECTRIC 1210, 1812 SIZES

Table 9-D

Size	1210						1812				
VDC (V)	10	16	25	35	50	100	10	16	25	50	100
0.010µF (103)						I					C
0.015µF (153)						I					C
0.022µF (223)						I					C
0.033µF (333)						I					C
0.047µF (473)						I					C
0.068µF (683)						I					C
0.10µF (104)	I	I	I		I	I	C	C	C	C	C
0.15µF (154)	I	I	I		I	I	C	C	C	C	C
0.22µF (224)	I	I	I		I	I	C	C	C	C	C
0.33µF (334)	I	I	I		I	I	C	C	C	C	C
0.47µF (474)	I	I	I		I		C	C	C	C	C
0.68µF (684)	I	I	I		I		C	C	C	C	C
1.0µF (105)	I	I	I		I		C	C	C	C	C
1.5µF (155)	I	I	I				C	C	C	C	
2.2µF (225)	I	I	I		D		C	C	C	C	
3.3µF (335)	I	I	I				C	C	C	C	

MULTILAYER CERAMIC CHIP CAPACITORS 1206 SERIES

CAPACITANCE RANGE – Y5V DIELECTRIC 1210, 1812 SIZES

Table 9-E

Size	1210					1812			
VDC (V)	6.3	10	16	25	50	10	16	25	50
4.7µF (475)		I	I	C	D	C	C	C	C
6.8µF (685)		I	I	C		C	C	C	C
10µF (106)		C	C	D	D	C	C	C	
22µF (226)		K	K						
47µF (476)	K	K					M		
100µF (107)	M								

Note: The letter in cell is expressed the symbol of product thickness.

CAPACITANCE RANGE – X5R DIELECTRIC 0201 SIZES

Table 10-A

Size	0201			
VDC (V)	10	16	25	50
100pF (101)		L	L	L
120pF (121)		L	L	L
150pF (151)		L	L	L
180pF (181)		L	L	L
220pF (221)		L	L	L
270pF (271)		L	L	L
330pF (331)		L	L	L
390pF (391)		L	L	L
470pF (471)		L	L	L
560pF (561)		L	L	L
680pF (681)		L	L	L
820pF (821)		L	L	L
1,000pF (102)	L	L	L	L
1,200pF (122)	L	L	L	
1,500pF (152	L	L	L	
2,200pF (222)	L	L	L	
2,700pF (272)	L	L	L	
3,300pF (332)	L	L	L	
4,700pF (472)	L	L	L	

MULTILAYER CERAMIC CHIP CAPACITORS 1206 SERIES

CAPACITANCE RANGE – X5R DIELECTRIC 0201 0402 SIZES

Table 10-B

Size	0201					0402				
VDC (V)	6.3	10	16	25	50	6.3	10	16	25	50
6,800µF (682)		L	L	L						
0.010µF (103)	L	L	L	L	L					
0.015µF (153)	L	L								H
0.022µF (223)	L	L								H
0.027µF (273)	L	L						H		H
0.033µF (333)	L	L						H		H
0.039µF (393)	L	L						H		H
0.047µF (473)	L	L				H	H	H		H
0.056µF (563)	L	L				H	H	H		H
0.068µF (683)	L	L				H	H	H		H
0.082µF (823)	L	L				H	H	H		H
0.10µF (104)	L	L	L	L		H	H	H	H	H/E
0.15µF (154)						H	H	H	H	
0.22µF (224)	L	L	L*			H	H	H	H	H
0.33µF (334)	L*	L*				H	H			
0.47µF (474)	L					H	H	H	H	H
0.68µF (684)						H	H			
1.0µF (105)	L*	L*	L*			H	H	H	H	H
2.2µF (225)	L*	L*				H	H	H/E	H	
4.7µF (475)						H	H	H*		
10µF (106)						H*	H*			

CAPACITANCE RANGE – X5R DIELECTRIC 0603 SIZES

Table 10-C

Size	0603				
VDC (V)	6.3	10	16	25	50
0.22µF (224)	X	X	X	X	
0.27µF (274)		X	X	X	
0.33µF (334)	X	X	X	X	
0.39µF (394)		X	X	X	
0.47µF (474)		X	X/B	X	X

MULTILAYER CERAMIC CHIP CAPACITORS 1206 SERIES

CAPACITANCE RANGE – X5R DIELECTRIC 0603 0805 SIZES

Table 10-D

Size	0603					0805				
VDC (V)	6.3	10	16	25	50	6.3	10	16	25	50
0.68µF (684)	X	X	X	X						
0.82µF (824)	X	X	X	X						
1.0µF (105)	X	X	X	X/B	X/B		C	C	C	C
1.5µF (155)	X					C	C	C	C	
2.2µF (225)	X/B	X	X	X	X	C	C	C	C	C
3.3µF (335)	X	X				C	C	C	C	
4.7µF (475)	X	X	X	X		C	C	C	C	C
10µF (106)	X/B	X	X	X*		C	C	C	C	C
22µF (226)	X*	X*				C	C*	C*	C*	
47µF (476)						C*	C*			
100µF (107)						C*				

CAPACITANCE RANGE – X5R DIELECTRIC 1206, 1210 SIZES

Table 10-E

Size	1206					1210					
VDC (V)	6.3	10	16	25	50	4	6.3	10	16	25	50
1.5µF (155)		J	J					K	K		
2.2µF (225)		J	J	P	P			K	K		
3.3µF (335)		P	P	P							
4.7µF (475)	P	P	P	P	P			K	K	K	
6.8µF (685)	P	P									
10µF (106)	P	P	P	P/D	P		K	K	K	K	M
22µF (226)	P	P	P	P			M	M	M		
47µF (476)	P	P	P*				M	M	M*		
100µF (107)	P*						M*	M*			
220µF (227)						M*	M*				

Note: 1) The letter in cell is expressed the symbol of product thickness. 2) The letter in cell with " * " mark is for "M tolerance" (20%) only

MULTILAYER CERAMIC CHIP CAPACITORS 1206 SERIES

CAPACITANCE RANGE – X6S DIELECTRIC 0201, 0402, 0603 SIZES

Table 11-A

Size	0201		0402				0603				
VDC (V)	4	6.3	6.3	10	16	25	4	6.3	10	16	25
0.10µF (104)	L	L									
0.22µF (224)		L									
0.47µF (474)			H								
1.0µF (105)	L*		H	H	H	H					
2.2µF (225)			H	H	H						
4.7µF (475)								X		X	X
10µF (106)								X*	X*	X*	
22µF (226)							X*	X*			

CAPACITANCE RANGE – X6S DIELECTRIC 0805, 1206, 1210 SIZES

Table 11-B

Size	0805						1206				1210			
VDC (V)	4	6.3	10	16	25	50	6.3	10	16	25	6.3	10	16	25
0.10µF (104)														
0.22µF (224)														
0.47µF (474)														
1.0µF (105)														
2.2µF (225)														
4.7µF (475)					C	C								
10µF (106)	C	C	C	C	C					D				
22µF (226)		C*	C*	C*				P	P*					M
47µF (476)	C*						P				M	M	M	
100µF (107)											M*			

Note: 1) The letter in cell is expressed the symbol of product thickness. 2) The letter in cell with " * " mark is for "M tolerance" (20%) only

INSULATION RESISTANCE – Requirement - Class II (X7R, X5R, X6S, Y5V)

Table 12

Rated Voltage	IR
100V: All X7R	10GΩ or RxC≧100 Ω-F whichever is smaller
50V: 0402>0.01uF; 0603≧1μF; 0805≧1μF; 1206≧4.7μF; 1210≧4.7μF	
35V: 0805≧2.2μF; 1206≧2.2μF; 1210≧10μF	
25V: 0402≧1μF; 0603≧2.2μF; 0805≧2.2μF; 1206≧10μF; 1210≧10μF	
16V: 0201≧0.1μF; 0402≧0.22μF; 0603≧1μF; 0805≧2.2μF; 1206≧10μF; 1210≧47μF	
10V: 0201≧47nF; 0402≧0.47μF; 0603≧0.47μF; 0805≧2.2μF; 1206≧4.7μF; 1210≧47μF	
6.3V; 4V; Size ≧1812	
All X6S items	RxC≧50 Ω-F.
100V: 1210≧3.3μF	
50V: 0402≧0.1μF; 0603≧2.2μF; 0805≧10μF; 1206≧10μF	
35V: 0603≧1μF	
25V: 0201≧0.1μF; 0402≧0.22μF; 0603≧10μF; 0805≧10μF; 1206≧22μF	
16V: 0201≧0.22μF; 0402≧1μF; 0603≧10μF	
10V: 0201>0.1μF; 0402≧1μF; 0603≧10μF; 0805≧47μF	
6.3V: 0201≧0.1μF; 0603≧4.7μF; 0805≧47μF; 1206≧10μF	
4V: 0603≧22μF; 0805≧47μF; 1206≧100μF	

TEMPERATURE COEFFICIENT- Test Condition Measurement voltage for Class II:

Table 13

Measurement Voltage	Size
Cap≤0.01μF: 0.5V; Cap.> 0.01μF: 0.2V	01005
Cap <0.1μF: 1.0V; 0.1μF*≦Cap.<1.0μF: 0.2V; Cap. ≧1.0μF: 0.1V (*: 0201x104/16V: 0.5V)	0201
Cap <0.1μF: 1.0V; Cap.=1μF: 0.5V; 1μF<Cap.<10μF: 0.2V; Cap. ≧1.0μF :0.1V	0402
Cap <1.0μF: 1.0V; 1.0μF*≦Cap. ≦4.7μF: 0.5V; Cap.> 4.7μF:0.2V	0603
Cap <10μF: 1.0V; Cap.=10μF: 0.5V; Cap.> 10μF:0.2V	0805
Cap≤10μF: 1.0V; 10μF<Cap. ≦100μF: 0.5V; Cap.> 100μF:0.2V	1206/1210

HUMIDITY (DAMP HEAT)STEADY STATE – Requirement - Class II (X7R, X5R, X6S, Y5V)

Table 14

Measurement Voltage	IR
100V: X7R; 1210≧3.3μF	1GΩ or RxC≧10Ω-F whichever is smaller
50V: 0402>0.01μF; 0603≧1μF; 0805≧1μF; 1206≧4.7μF; 1210≧4.7μF	
35V: 0603≧1μF; 0805≧2.2μF; 1210≧10μF	
25V: 0201≧0.1uF; 0402≧0.22μF; 0603≧2.2μF; 0805≧2.2μF; 1206≧10μF; 1210≧10μF	
16V: 0201≧0.1uF; 0402≧0.22μF; 0603≧1μF ;0805≧2.2μF; 1206≧10μF; 1210≧47μF	
10V: 0201≧47nF; 0402≧0.47μF; 0603≧0.47μF; 0805≧2.2μF; 1206≧4.7μF; 1210≧47μF	
6.3V; 4V; All X6S items; Size≧ 1812	

HIGH TEMPERATURE LOAD (ENDURANCE)– Test Condition-100% of Rated Voltage

Table 15

Size	Dielectric	Rated Voltage	Capacitance
0201	X5R/X7R/X6S	≤10V	C≥0.1μF
		≥16V	C>0.1μF
0402	X5R	≤16V	C>1.0μF
		25V,50V	C≥1.0μF
	X6S	6.3V,10V	C>1.0μF
		16V,25V	C≥1.0μF
	X7R/Y5V	6.3V,10V	C≥1.0μF
0603	X5R/X7R/X6S	4V	C≥22μF
		6.3V,10V	C≥4.7μF
	X5R/X6S	25V	C≥1.0μF
	X7R	35V	C≥1.0μF
0805	X5R/X7R/X6S	4V	C≥4.7μF
		6.3V	C≥22μF
		10V, 50V	C≥10μF
	X6S/X7R	16V, 25V	C≥10μF
	X5R		C≥22μF
1206	X5R/X7R/X6S	≤6.3V	C≥47μF
1210	X5R/X7R/X6S	16V	C≥47μF
	X7R	100V	C≥3.3μF

HIGH TEMPERATURE LOAD (ENDURANCE)– Test Condition-150% of Rated Voltage

Table 16

Dielectric	Rated Voltage	Capacitance	Dielectric
0201	X5R/X6S	16V, 25V	C= 0.1µF
	X7R	16V	C≥0.00µF
0402	X5R/X7R/X6S	50V	C>0.01µF
		10-25V	C≥0.22µF
	Y5V	16V	C≥4.7µF
0603	Y7R	50V	C>1.0µF
		25V	C=1.0µF
	X5R	50V	C≥1.0µF
	X5R/X7R/X6S	10V, 16V	C≥1.0µF
	Y5V	16V	C≥2.2µF
0805	X5R/X7R/X6S	100V	C≥0.47µF
		50V	C≥1.0µF
		35V	C≥2.2µF
		10-25V	C≥4.7µF
	Y5V	16V	C≥4.7µF
1206	X7R	100V	C≥1.0µF
		50V	C=4.7µF
	X5R/X6S	100V	C>1.0µF
		50V	C=4.7µF
1210	X5R/X7R/X6S	50-100V	C≥2.2µF

RELIABILITY TEST CONDITIONS AND REQUIREMENTS

Item	Test Condition	Requirements
Visual and Mechanical	-	* No remarkable defect. * Dimensions to conform to individual spec. sheet.
Capacitance	Class I: (NP0) ≦1000pF, 1.0±0.2Vrms, 1MHz±10% ＞1000pF, 1.0±0.2Vrms,1KHz±10% Class II: (X7R, X6S, X5R,Y5V) C≦10μF, 1.0±0.2Vrms, 1KHz±10% ** C＞10μF, 0.5±0.2Vrms, 120Hz±20% ** Test condition: 0.5±0.2Vrms, 1KHz±10% X7R: 0805=106(6.3V), 0603/475(6.3V) X5R: 0201≧ 224 (6.3V,10V,16V)*, 0402≧475 (6.3V,16V), 0402≧225(10V), 0603=106 (6.3V,10V)TT18X≧475(10V) , TT15X series X6S: 0201/474(4V),0201≧104 (6.3V,10V)*, 0402≧225 (6.3V), 0402/475 (10V), 0603/106 (6.3V), * Excluding X5R/0201/105(6.3V); 225(10V), X6S/0201/104(10V) (1.0±0.2 Vrms, 1KHz±10%) * Before initial measurement (Class II only): To apply de-aging at 150° C for 1hr for 24±2 hrs at room temp.	* Shall not exceed the limits given in the detailed spec.
Q/D.F (Dissipation Factor)		NP0: Cap≧30pF, Q≧1000; Cap<30pF,Q≧400+20C X7R, *See <Table 3>* X5R, *See <Table 4>* Y5V: *See <Table 5>* X6S: *See <Table 6>*
Dielectric Strength	* To apply voltage (≦100V) 250%. * Duration: 1 to 5 sec. * Charge and discharge current less than 50mA.	* No evidence of damage or flash over during test.
Insulation Resistance	* Preconditioning for Class II MLCC: Perform a heat treatment at 150±10° C for 1 hour, then leave in ambient condition for 24±2 hours before measurement. To apply rated voltage for max. 120 sec.	Class I: (NP0) 10GΩ or RxC≧500Ω-F whichever is smaller. Class II (X7R, X5R, X6S, Y5V) 10GΩ or RxC≧500Ω-F whichever is smaller. *See <Table 12>*

RELIABILITY TEST CONDITIONS AND REQUIREMENTS

Item	Test Condition	Requirements
Temperature Coefficient	With no electrical load. @Oprtating Temp. Range NP0/X7R: @ -55~125° C; X5R: -55~ 85° C ; X6S: -55~105° C ; Y5V: -25~ 85° C at 20° C * Before initial measurement (Class II only): To apply de-aging at 150° C for 1hr then set for 24±2 hrs at room temp. • Measurement voltage for Class II: *See <Table 13>*	NP0: Within ±30ppm/° C X7R: Within ±15% X5R: Within ±15% X6S: Within ±22% Y5V: : Within +30%/-80%
Adhesive Strength of Termination	*Pressurizing force: 2N (0201) and 5N (≦0603) and 10N (>0603); * Test time: 10±1 sec.	* No remarkable damage or removal of the terminations.
Vibration Resistance	Vibration frequency: 10~55 Hz/min. * Total amplitude: 1.5mm * Test time: 6 hrs. (Two hrs each inthree * mutually perpendicular directions.) * Before initial measurement (Class II only): To apply de-aging at 150° C for 1hr then set for 24±2 hrs at room temp. * Cap./DF(Q) Measurement to be made after de-aging a 150° C for 1hr then set for 24±2 hrs at room temp.	* No remarkable damage or removal of the terminations. * No remarkable damage. * Cap change and Q/D.F.: To meet initial spec.
Bending Test	* The middle part of substrate shall be pressurized by means of the pressurizing rod at a rate of about 1 mm per second until the deflection becomes 1 mm and then the pressure shall be maintained for 5±1 sec. *Before initial measurement (Class II only): To apply de-aging at 150° C for 1hr then set for 24±2 hrs at room temp. Measurement to be made after keeping at room temp. for 24±2 hrs.	* No remarkable damage. * Cap change： NP0: within ±5% or 0.5pF whichever is larger X7R, X5R, X6S: within ±12.5% Y5V: within ±30% (This capacitance change means the change of capacitance under specified flexure of substrate from the capacitance measured before the test.)

RELIABILITY TEST CONDITIONS AND REQUIREMENTS

Item	Test Condition	Requirements
Resistance to Soldering Heat	* Solder temperature: 260±5° C * Dipping time: 10±1 sec * Preheating: 120 to 150° C for 1 minute before immerse the capacitor in a eutectic solder. * Before initial measurement (Class II only): To apply de-aging at 150° C for 1hr then set for 24±2 hrs at room temp. * Cap. / DF(Q) / I.R. Measurement to be made after de-aging at 150° C for 1hr then set for 24±2 hrs at room	* No remarkable damage. * Cap change: NP0: within ±2.5% or 0.25pF whichever is larger X7R, X5R, X6S: within ±7.5% Y5V: within ±20% * Q/D.F., I.R. and dielectric strength: To meet initial requirements. * 25% max. leaching on each edge.
Temperature Cycle	*Conduct the five cycles according to the temperatures and time. Time (min.): 30±3 @ Min. operating temp.+0/-3 ° C Time (min.): 2~3 @ Room temperture Time (min.): 30±3 @ Max. operating temp.+3/-0 ° C Time (min.): 2~3 @ Room temperture * Before initial measurement (Class II only): Perform150+0/-10° C for 1 hr and then set for 24±2 hrs at room temp. * Cap. / DF(Q) / I.R. Measurement to be made after de-aging at 150° C for 1hr then set for 24±2 hrs at room.	* No remarkable damage. * Cap change： NP0: within ±2.5% or 0.25pF whichever is larger X7R, X5R, X6S: within ±7.5% Y5V: within ±20% * Q/D.F., I.R. and dielectric strength: To meet initial requirements.
Solder ability	* Solder temperature: 235±5° C * Dipping time: 2±0.5 sec.	95% min. coverage of all metalized area

RELIABILITY TEST CONDITIONS AND REQUIREMENTS

Item	Test Condition	Requirements
Humidity (Damp Heat) Steady State	* Test temp.: 40±2° C * Humidity: 90~95% RH * Test time: 500+24/-0hrs. • Before initial measurement (Class II only): Perform 150+0/-10° C for 1 hr and then set for 24±2 hrs at room temp. * Cap. / DF(Q) / I.R. Measurement to be made after de-aging at 150° C for 1hr then set for 24±2 hrs at room temp.	* No remarkable damage. * Cap change: NP0: within ±5% or 0.5pF whichever is larger X7R, X5R, X6S: ≧10V**,within ±12.5%; 6.3V within ±25%; ** 10V: 0603≧4.7μF; 0402≧1μF; 0201 ≧0.1μF, within ±25%; Y5V: ≧10V, within ±30%; 6.3V, within +30/≦ -40% * Q/D.F. value: NP0: More than 30pF Q≧350, 10pF≦C≦30pF, Q≧275+2.5C Less than 10pF Q≧200+10C X7R: *See <Table 3>* X5R: *See <Table 4>* Y5V: *See <Table 5>* X6S: *See <Table 6>* *I.R.: ≧10V, 1GΩ or 50 Ω-F whichever is smaller. Class II (X7R, X5R, X6S, Y5V) *See Table 14*

RELIABILITY TEST CONDITIONS AND REQUIREMENTS

Item	Test Condition	Requirements
Humidity (Damp Heat) Load	*Test temp.: 40±2° C * Humidity: 90~95%RH * Test time: 500+24/-0 hrs. * To apply voltage： rated voltage. * Before initial measurement (Class II only): To apply de-aging at 150° C for 1hr then set for 24±2 hrs at room temp. * Cap. / DF(Q) / I.R. Measurement to be made after de-aging at 150° C for 1hr.then set for 24±2 hrs at room temp	* No remarkable damage. Cap change: NP0: ±7.5% or 0.75pF whichever is larger. X7R, X5R, X6S: ≧10V**,within ±12.5%; ≦6.3V within ±25%; **10V: 0603 4.7≧μF; 0402 ≧1μF; 0201≧0.1 μF, within ±25%; Y5V: ≧10V, within ±30%; ≦6.3V, within +30/-40% Q/D.F. value: NP0: C≧30pF, Q≧200; C<30pF, Q≧100+10/3C *X7R: See <Table 3>* *X5R: See <Table 4>* *Y5V: See <Table 5>* *X6S: See <Table 6>* * I.R.: ≧10V, 500MΩ or 25 Ω-F whichever is smaller. Class II (X7R, X5R, X6S, Y5V) *See Table 14*

RELIABILITY TEST CONDITIONS AND REQUIREMENTS

Item	Test Condition	Requirements
High Temperature Load (Endurance)	* Test temp.: NP0, X7R: 125±3° C X6S: 105±3° C X5R, Y5V: 85±3° C * Test time: 1000+24/-0 hrs. * To apply voltage: (1) ≦ 6.3V or C 10≧μF : 150% of rated voltage. (2) 10V≦ Ur<500V: 200% of rated voltage. (3) 500V: 150% of rated voltage. (4) Ur≧630V: 120% of rated voltage. (5) 100% of rated voltage for below range *See Table 15* (6) 150% of rated voltage for below range. *See Table 16* * Before initial measurement (Class II only): To apply de-aging at 150° C for 1hr then set for 24±2 hrs at room temp. * Cap. / DF(Q) / I.R. Measurement to be made after de-aging at 150° C for 1hr then set for 24±2 hrs at room temp. ** De-rating conditions: 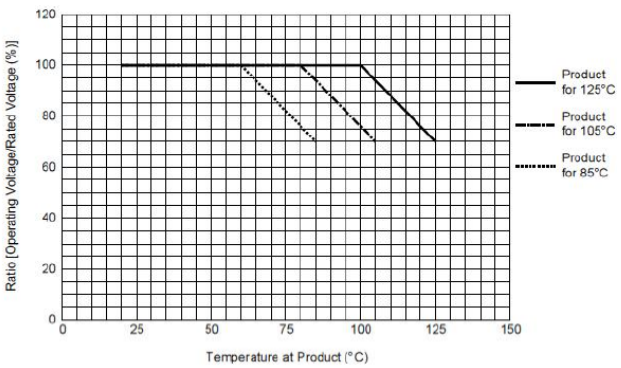 	* No remarkable damage. Cap change: NP0: ±3.0% or ±0.3pF whichever is larger X7R, X5R, X6S: ≧10V**, within ±12.5%; ≦6.3V within ±25%; ** 10V: 0603≧4.7μF; 0402≧1μF; 0201≧0.1μF, within ±25%; Y5V: ≧10V, within ±30%; ≦6.3V, within +30/-40% Q/D.F. value: NP0: More than 30pF, Q≧350 10pF≦C<30pF, Q≧275+2.5C Less than 10pF, Q≧200+10C X7R, X5R, *X7R: See <Table 3>* *X5R: See <Table 4>* *Y5V: See <Table 5>* *X6S: See <Table 6>* *I.R.: ≧10V, 1GΩ or 50Ω-F whichever is smaller. Class II (X7R, X5R, X6S, Y5V) *See Table 14*

RECOMMENDED PROFILE CONDITIONS

The lead-free termination MLCCs are not only to be used on SMT against lead-free solder paste, but also suitable against lead-containing solder paste.

If the optimized solder joint is requested, increasing soldering time, temperature and concentration of N2 within oven are recommended.

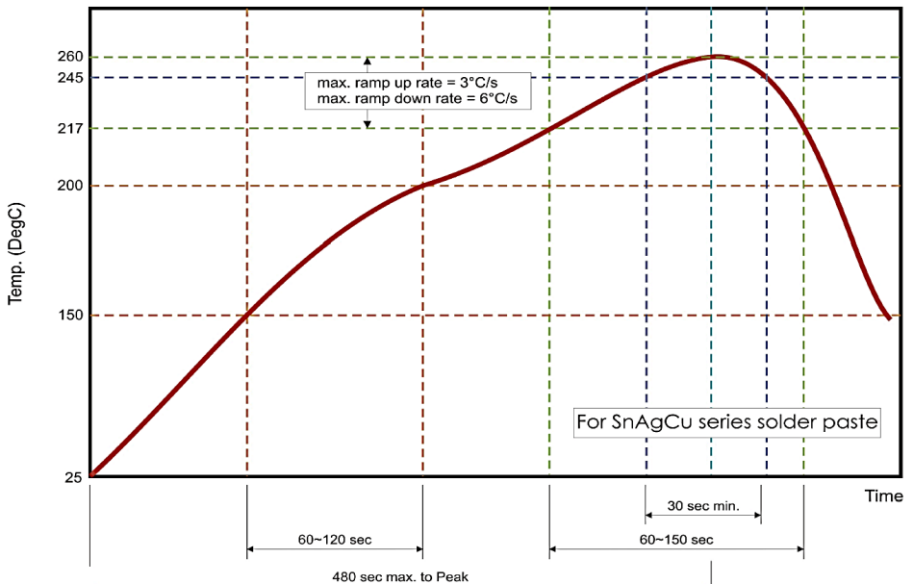

Reflow Soldering Profile For SMT Process with SnAgCu series Solder Paste

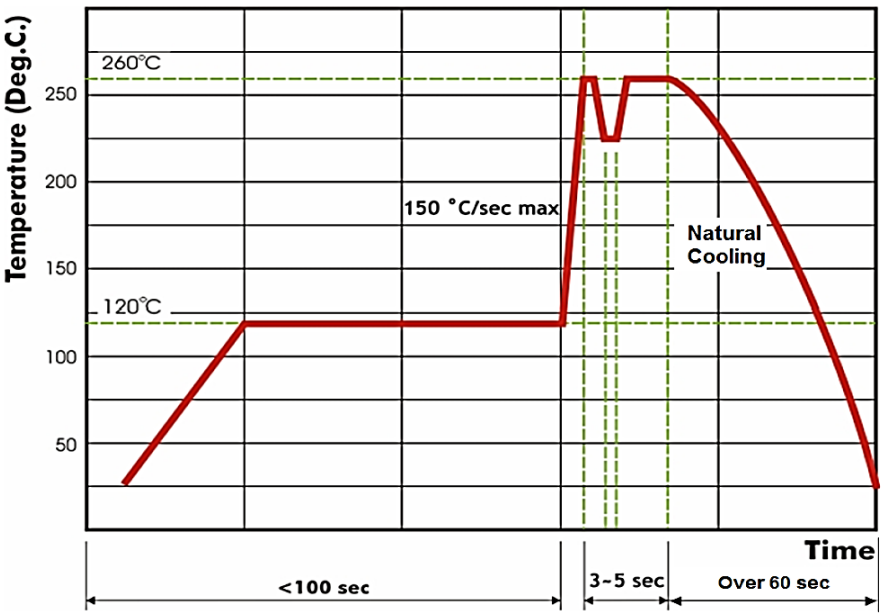

Wave Soldering Profile For SMT Process with SnAgCu series Solder Paste

MULTILAYER CERAMIC CHIP CAPACITORS 1206 SERIES

PACKAGING STYLE AND QUANTITY

Size	Thickness (Symbol)		Paper Tape		Plastic Tape	
			7" Reel	13" Reel	7" Reel	13" Reel
0201 (0603)	0.30±0.03	L	15,000	70,000	-	-
	0.30±0.05	L	15,000			
	0.30±0.09	L	15,000			
0402 (1005)	0.50±0.05	H	10,000	50,000		
	0.50+0.02/-0.05	Q	10,000	50,000		
	0.50±0.20	E	10,000			
0603 (1608)	0.50±0.10	N	4,000			
	0.80±0.07	S	4,000	15,000		
	0.80+0.15/-0.10	X	4,000	15,000		
0805 (2012)	0.50±0.10	N	4,000	15,000		
	0.60±0.10	A	4,000	15,000		
	0.85±0.15	B	4,000	15,000		
	0.85±0.10	T	4,000	15,000		
	1.25±0.15	C			3,000	10,000
1206 (3216)	0.85±0.15	B	4,000	15,000		
	0.85±0.10	T	4,000	15,000		
	0.95±0.10	I			3,000	10,000
	1.15±0.15	J			3,000	10,000
	1.25±0.15	C			3,000	10,000
	1.60±0.15	D			2,000	10,000
	1.60+0.30/-0.10	P			2,000	9,000
1210 (3225)	0.85±0.10	T			3,000	10,000
	0.95±0.10	I			3,000	10,000
	1.25±0.15	C			3,000	10,000
	1.60±0.15	D			2,000	
	2.00±0.20	K			1,000	6,000
	2.50±0.30	M			1,000	6,000

MULTILAYER CERAMIC CHIP CAPACITORS 1206 SERIES

PACKAGING STYLE AND QUANTITY

Size	Thickness (Symbol) (mm)		Paper Tape		Plastic Tape	
			Pcs/7" Reel	pcs/13" Reel	Pcs/7" Reel	Pcs/13" Reel
1812 (4532)	1.25±0.15	C			1,000	5,000
	1.60±0.15	D			1,000	
	2.00±0.20	K			1,000	
	2.50±0.30	M			500	3,000
	2.80±0.30	U			500	

REEL DIMENSION (Unit: mm)

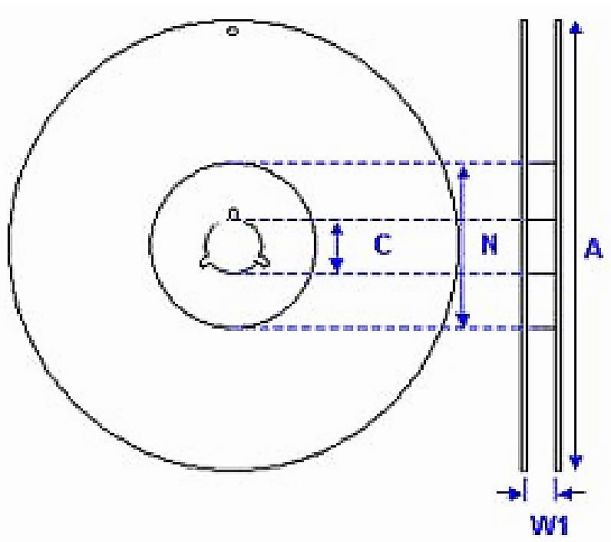

Size Code	0201, 0402, 0603, 0805, 1206, 1210			1812
Reel Size	7"	10"	13"	7"
C	13.0+0.5/-0.2	13.0+0.5/-0.2	13.0+0.5/-0.2	13.0+0.5/-0.2
W 1	8.4+1.5/0	8.4+1.5/-0	8.4+1.5/-0	12.4+2.0/-0
A	178.0±0.10	250.0±1.0	330.0±1.0	178.0±0.10
N	60.0+1.0/-0	100.0±1.0	100±1.0	60.0+1.0/-0

MULTILAYER CERAMIC CHIP CAPACITORS 1206 SERIES

TAPE DIMENSION (Unit: mm)

Paper Tape

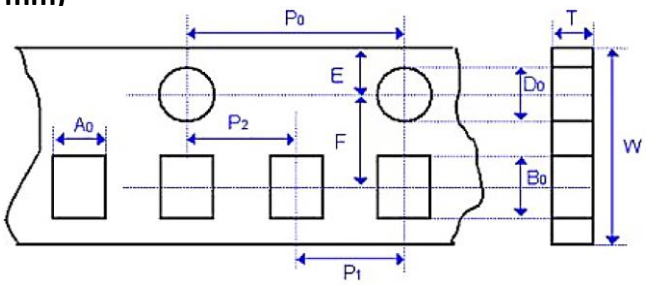

Plastic Tape

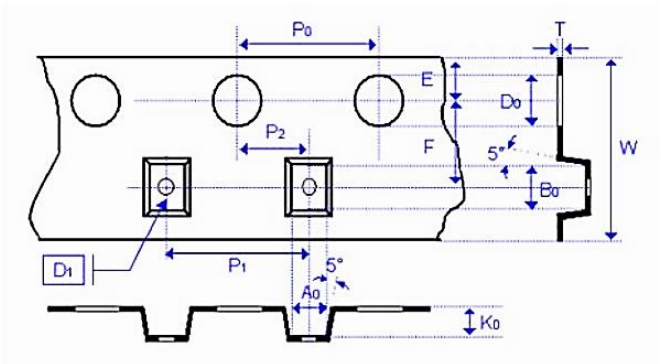

Size	0201	0402	0603	0805		
Thickness	L	H	H, S, B, X	A, H	B, X	C
A0	0.40 +/-0.10	0.70 +/-0.20	1.05 +/-0.30	1.5+/-0.20	1.5 +/-0.20	< 1.80
B0	0.70 +/-0.10	1.20 +/-0.20	1.80 +/-0.30	2.30 +/-0.20	2.30 +/-0.20	< 2.70
T	≦0.55	≦0.80	≦1.20	≦1.15	≦1.20	0.23 +/-0.1
K0	-	-	-	-	-	< 2.50
W	8.00 +/-0.30	8.00 +/-0.30	8.00 +/-0.30	8.00 +/-0.30	8.00 +/-0.30	8.00 +/-0.30
P0	4.00 +/-0.10	4.00 +/-0.10	4.00 +/-0.10	4.00 +/-0.10	4.00 +/-0.10	4.00 +/-0.10
10xP0	40.0 +/-0.10	40.0 +/-0.10	40.0 +/-0.20	40.0 +/-0.20	40.0 +/-0.20	40.0 +/-0.20
P1	2.00 +/-0.05	2.00 +/-0.05	4.00 +/-0.10	4.00 +/-0.10	4.00 +/-0.10	4.00 +/-0.10
P2	2.00 +/-0.05	2.00 +/-0.05	2.00 +/-0.05	2.00 +/-0.05	2.00 +/-0.05	2.00 +/-0.05
D0	1.50 +0.1/-0	1.50 +0.1/-0	1.50 +0.1/-0	1.50 +0.1/-0	1.50 +0.1/-0	1.50 +0.1/-0
D1	-	-	-	-	-	1.00 +/-0.10
E	1.75 +/-0.10	1.75 +/-0.10	1.75 +/-0.10	1.75 +/-0.10	1.75 +/-0.10	1.75 +/-0.10
F	3.50 +/-0.05	3.50 +/-0.05	3.50 +/-0.05	3.50 +/-0.05	3.50 +/-0.05	3.50 +/-0.05

MULTILAYER CERAMIC CHIP CAPACITORS 1206 SERIES

TAPE DIMENSION (Unit: mm)

Size	1206			1210		
Thickness	B	I, C, J	D, P	B	I, C, D, K	M
A0	1.90 +/-0.50	< 2.00	< 2.30	< 3.05	< 3.05	< 3.20
B0	3.50 +/-0.50	< 3.70	< 4.00	< 3.80	< 3.80	< 4.00
T	≦1.20	0.23 +/-0.1	0.23 +/-0.1	0.23 +/-0.1	0.23 +/-0.1	0.23 +/-0.1
K0	-	< 2.50	< 2.50	< 1.50	< 2.50	< 3.20
W	8.00 +/-0.30	8.00 +/-0.30	8.00 +/-0.30	8.00 +/-0.30	8.00 +/-0.30	8.00 +/-0.30
P0	4.00 +/-0.10	4.00 +/-0.10	4.00 +/-0.10	4.00 +/-0.10	4.00 +/-0.10	4.00 +/-0.10
10xP0	40.0 +/-0.20	40.0 +/-0.20	40.0 +/-0.20	40.0 +/-0.20	40.0 +/-0.20	40.0 +/-0.20
P1	4.00 +/-0.10	4.00 +/-0.10	4.00 +/-0.10	4.00 +/-0.10	4.00 +/-0.10	4.00 +/-0.10
P2	2.00 +/-0.05	2.00 +/-0.05	2.00 +/-0.05	2.00 +/-0.05	2.00 +/-0.05	2.00 +/-0.05
D0	1.50 +0.1/-0	1.50 +0.1/-0	1.50 +0.1/-0	1.50 +0.1/-0	1.50 +0.1/-0	1.50 +0.1/-0
D1	-	1.00 +/-0.10	1.00 +/-0.10	1.00 +/-0.10	1.00 +/-0.10	1.00 +/-0.10
E	1.75 +/-0.10	1.75 +/-0.10	1.75 +/-0.10	1.75 +/-0.10	1.75 +/-0.10	1.75 +/-0.10
F	3.50 +/-0.05	3.50 +/-0.05	3.50 +/-0.05	3.50 +/-0.05	3.50 +/-0.05	3.50 +/-0.05

Size	1812	
Thickness	C, D, K	M
A0	< 3.90	< 3.90
B0	< 5.30	< 5.30
T	0.25 +/-0.1	0.25 +/-0.1
K0	< 2.50	< 3.50
W	12.00 +/-0.30	12.00 +/-0.30
P0	4.00 +/-0.10	4.00 +/-0.10
10xP0	40.0 +/-0.20	40.0 +/-0.20
P1	8.00 +/-0.10	8.00 +/-0.10
P2	2.00 +/-0.10	2.00 +/-0.10
D0	1.50 +0.1/-0	1.50 +0.1/-0
D1	1.50 +/-0.10	1.50 +/-0.10
E	1.75 +/-0.10	1.75 +/-0.10
F	5.50 +/-0.10	5.50 +/-0.10

STORAGE AND HANDLING CONDITIONS

(1) To store products at 5 to 40℃ ambient temperature and 20 to 70%. related humidity conditions.

(2) The product is recommended to be used within one year after shipment. Check solder ability in case of shelf life extension is needed.

(3) Don't open the tape until the parts are to be used, use the chips within 3 months after the tape is opened.

(4) For product of high dielectric constant (Class2&3, characteristics B/W & Y), the Electro static capacity changes with the passage of time due to the

inherent characteristics of ceramic dielectric materials. The changed capacity reverts to nominal at the temperature it reaches during the soldering process.

CAUTIONS

(1) The corrosive gas reacts on the terminal electrodes of capacitors, and results in the poor solder ability. Do not store the capacitors in the ambience of

corrosive gas (e.g., hydrogen sulfide, sulfur dioxide, chlorine, ammonia gas etc.)

(2) In corrosive atmosphere, solder ability might be degraded, and silver migration might occur to cause low reliability.

(3) Due to the dewing by rapid humidity change, or the photochemical change of the terminal electrode by direct sun light, the solder ability and electrical performance may deteriorate. Do not store capacitors under direct sunlight or dewing condition. To store products on the shelf and avoid exposure to moisture.

DISCLAIMER

NextGen Component, Inc. reserves the right to make changes to the product(s) and or information contained herein without notice. No liability is assumed as a result of their use or application. No rights under any patent accompany the sale of any such product(s) or information