# High Speed Infrared Emitting Diodes, 940 nm, Surface Emitter Technology

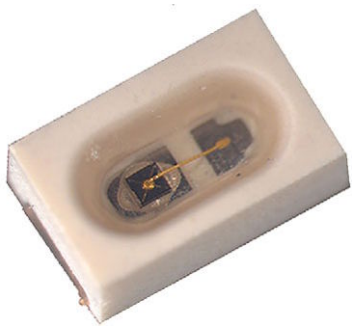

## FEATURES

- Package type: surface-mount
- Package form: 0805
- Dimensions (L x W x H in mm): 2 x 1.25 x 0.8
- Peak wavelength: $\lambda_p$ = 940 nm
- High speed
- Angle of half intensity: $\varphi = \pm 60°$
- 0805 standard surface-mountable package
- Floor life: 168 h, MSL 3, according to J-STD-020
- Lead (Pb)-free reflow soldering
- Material categorization: for definitions of compliance please see www.vishay.com/doc?99912

Pb-free
e4
RoHS COMPLIANT
HALOGEN FREE
GREEN (5-2008)

## DESCRIPTION

As part of the SurfLight™ portfolio, the VSMY5940 is an infrared, 940 nm emitting diode based on GaAlAs surface emitter chip technology with high radiant intensity, high optical power and high speed, in a low profile 0805 surface mount (SMD) package.

## APPLICATIONS

- Miniature light barrier
- Optical switch
- IR point source

**PRODUCT SUMMARY**

| COMPONENT | $I_e$ (mW/sr) at $I_F$ = 100 mA | $\varphi$ (°) | $\lambda_p$ (nm) | $t_r$ (ns) |
|---|---|---|---|---|
| VSMY5940 | 13 | ± 60 | 940 | 7 |

**Note**

- Test conditions see table “Basic Characteristics“

**ORDERING INFORMATION**

| ORDERING CODE | PACKAGING | REMARKS | PACKAGE FORM |
|---|---|---|---|
| VSMY5940 | Tape and reel | MOQ: 3000 pcs, 3000 pcs/reel | 0805 |

**Note**

- MOQ: minimum order quantity


For technical questions, contact: emittertechsupport@vishay.com
THIS DOCUMENT IS SUBJECT TO CHANGE WITHOUT NOTICE. THE PRODUCTS DESCRIBED HEREIN AND THIS DOCUMENT ARE SUBJECT TO SPECIFIC DISCLAIMERS, SET FORTH AT www.vishay.com/doc?91000

| **ABSOLUTE MAXIMUM RATINGS** ($T_{amb}$ = 25 °C, unless otherwise specified) | | | | |
|---|---|---|---|---|
| **PARAMETER** | **TEST CONDITION** | **SYMBOL** | **VALUE** | **UNIT** |
| Reverse voltage | | $V_R$ | 5 | V |
| Forward current | | $I_F$ | 100 | mA |
| Peak forward current | $t_p/T$ = 0.1, $t_p$ = 100 µs | $I_{FM}$ | 200 | mA |
| Surge forward current | $t_p$ = 100 µs | $I_{FSM}$ | 500 | mA |
| Power dissipation | | $P_V$ | 190 | mW |
| Junction temperature | | $T_j$ | 125 | °C |
| Operating temperature range | | $T_{amb}$ | -40 to +110 | °C |
| Storage temperature range | | $T_{stg}$ | -40 to +110 | °C |
| Soldering temperature | According to Fig. 7, J-STD-020 | $T_{sd}$ | 260 | °C |
| Thermal resistance junction-to-ambient | EIA / JESD51 | $R_{thJA}$ | 280 | K/W |

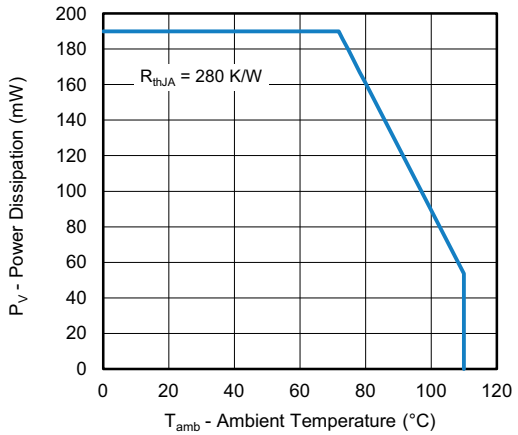


Fig. 1 - Power Dissipation Limit vs. Ambient Temperature

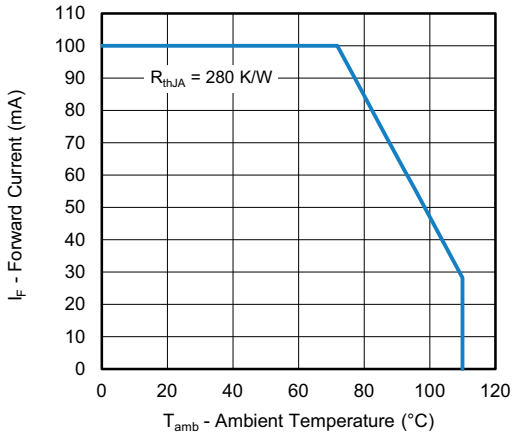


Fig. 2 - Forward Current Limit vs. Ambient Temperature

| **BASIC CHARACTERISTICS** ($T_{amb}$ = 25 °C, unless otherwise specified) | | | | | | |
|---|---|---|---|---|---|---|
| **PARAMETER** | **TEST CONDITION** | **SYMBOL** | **MIN.** | **TYP.** | **MAX.** | **UNIT** |
| Forward voltage | $I_F$ = 100 mA, $t_p$ = 20 ms | $V_F$ | - | 1.6 | 1.9 | V |
| Temperature coefficient of $V_F$ | $I_F$ = 100 mA, $t_p$ = 20 ms | $TK_{VF}$ | - | -0.7 | - | mV/K |
| Reverse current | | $I_R$ | Not designed for reverse operation | | | µA |
| Junction capacitance | $V_R$ = 0 V, f = 1 MHz, E = 0 mW/cm$^2$ | $C_J$ | - | 30 | - | pF |
| Radiant intensity | $I_F$ = 100 mA, $t_p$ = 20 ms | $I_e$ | 9 | 13 | 18 | mW/sr |
| Temperature coefficient of radiant power | $I_F$ = 100 mA, $t_p$ = 20 ms | $TK\phi_e$ | - | -0.2 | - | %/K |
| Angle of half intensity | | $\varphi$ | - | ± 60 | - | ° |
| Peak wavelength | $I_F$ = 100 mA, $t_p$ = 20 ms | $\lambda_p$ | - | 940 | - | nm |
| Spectral bandwidth | $I_F$ = 100 mA, $t_p$ = 20 ms | $\Delta\lambda$ | - | 55 | - | nm |
| Temperature coefficient of $\lambda_p$ | $I_F$ = 100 mA, $t_p$ = 20 ms | $TK_{\lambda p}$ | - | 0.28 | - | nm/K |
| Rise time | $I_F$ = 100 mA, 10 % to 90 % | $t_r$ | - | 5 | - | ns |
| Fall time | $I_F$ = 100 mA, 10 % to 90 % | $t_f$ | - | 5 | - | ns |


For technical questions, contact: emittertechsupport@vishay.com
THIS DOCUMENT IS SUBJECT TO CHANGE WITHOUT NOTICE. THE PRODUCTS DESCRIBED HEREIN AND THIS DOCUMENT ARE SUBJECT TO SPECIFIC DISCLAIMERS, SET FORTH AT www.vishay.com/doc?91000

**BASIC CHARACTERISTICS** ($T_{amb}$ = 25 °C, unless otherwise specified)

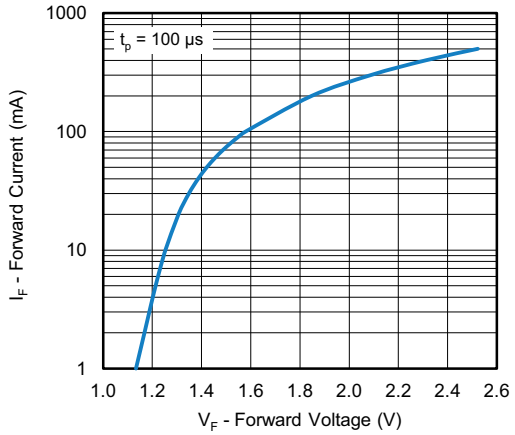


Fig. 3 - Forward Current vs. Forward Voltage

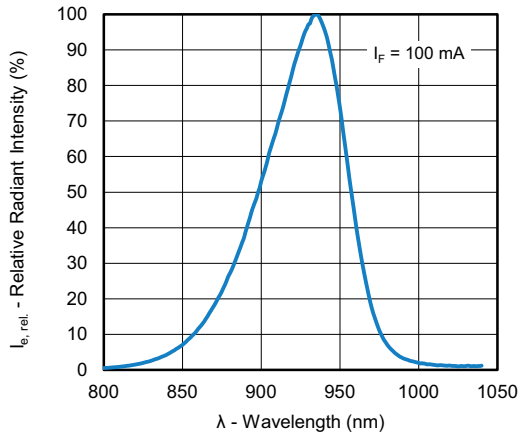


Fig. 5 - Relative Radiant Power vs. Wavelength

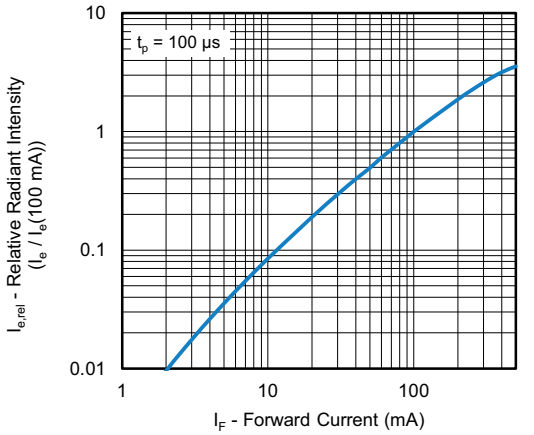


Fig. 4 - Relative Radiant Intensity vs. Forward Current

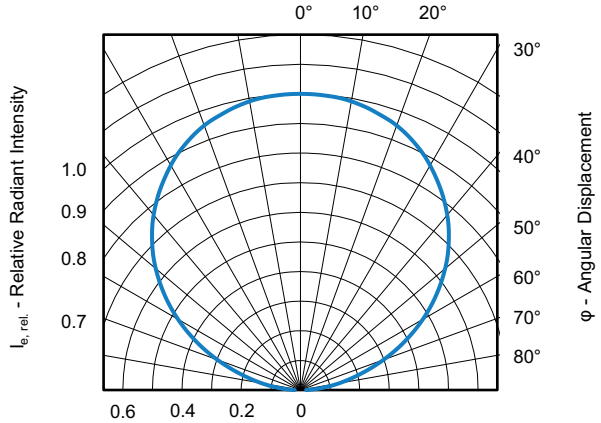


Fig. 6 - Relative Radiant Intensity vs. Angular Displacement

## REFLOW SOLDER PROFILE

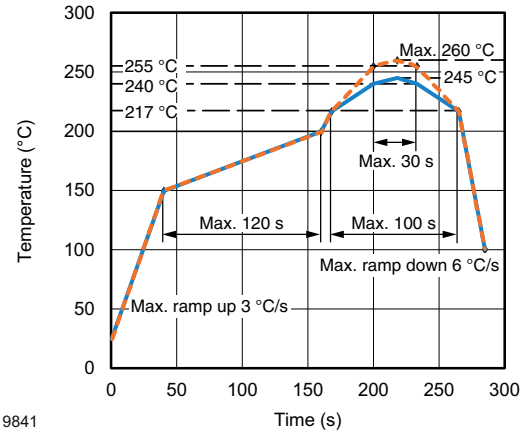


Fig. 7 - Lead (Pb)-free Reflow Solder Profile According to J-STD-020

## DRYPACK

Devices are packed in moisture barrier bags (MBB) to prevent the products from moisture absorption during transportation and storage. Each bag contains a desiccant.

## FLOOR LIFE

Time between soldering and removing from MBB must not exceed the time indicated in J-STD-020:
Moisture sensitivity: level 3
Floor life: 168 h
Conditions: $T_{amb}$ < 30 °C, RH < 60 %

## DRYING

In case of moisture absorption devices should be baked before soldering. Conditions see J-STD-033D or label. Devices taped on reel dry using recommended conditions 192 h at 40 °C (+ 5 °C), RH < 5 %.


For technical questions, contact: emittertechsupport@vishay.com
THIS DOCUMENT IS SUBJECT TO CHANGE WITHOUT NOTICE. THE PRODUCTS DESCRIBED HEREIN AND THIS DOCUMENT ARE SUBJECT TO SPECIFIC DISCLAIMERS, SET FORTH AT www.vishay.com/doc?91000

**PACKAGE DIMENSIONS** in millimeters

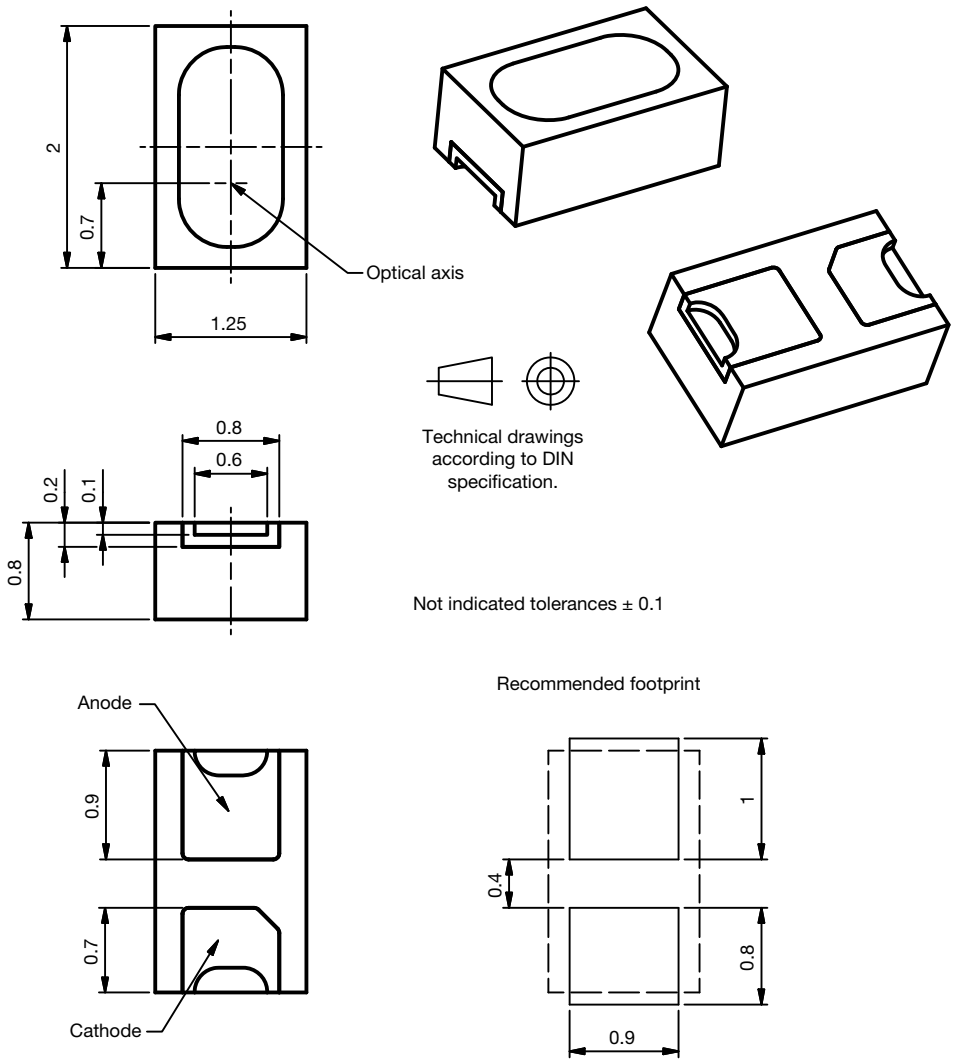


Drawing- No.: 6.550-5352.01-4
Issue: 1; 20.12.2016


For technical questions, contact: emittertechsupport@vishay.com
THIS DOCUMENT IS SUBJECT TO CHANGE WITHOUT NOTICE. THE PRODUCTS DESCRIBED HEREIN AND THIS DOCUMENT ARE SUBJECT TO SPECIFIC DISCLAIMERS, SET FORTH AT www.vishay.com/doc?91000

## **BLISTER TAPE DIMENSIONS** in millimeters

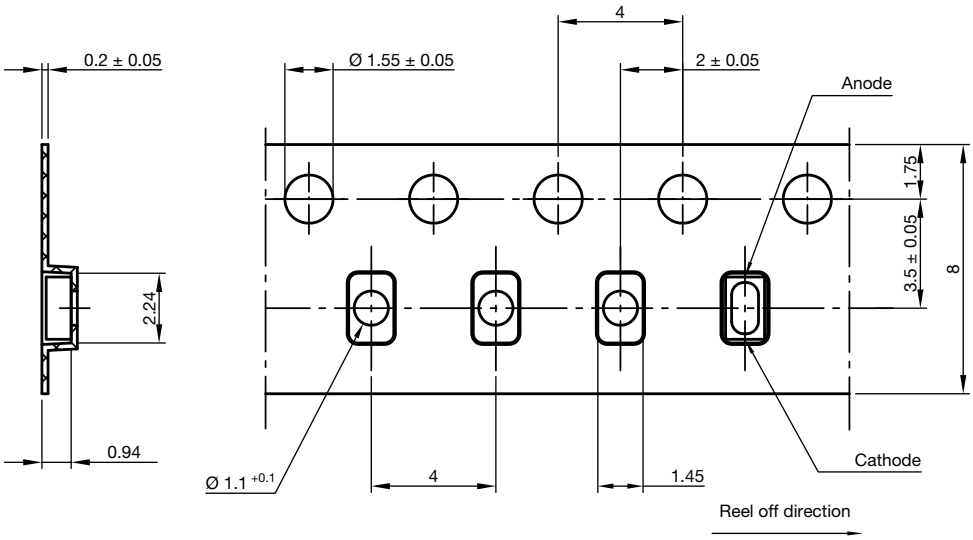


Not indicated tolerances ± 0.1

Technical drawings according to DIN specification.

Drawing-No.: 9.700-5352.02-4
Issue: 1; 20.12.2016

## **REEL DIMENSIONS** in millimeters

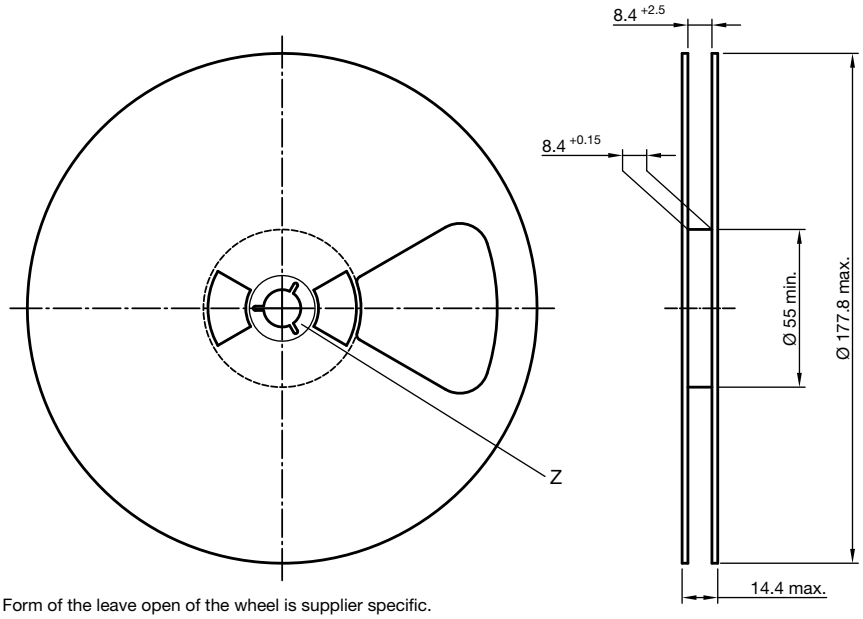


Form of the leave open of the wheel is supplier specific.

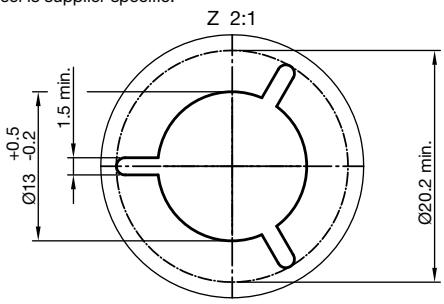


Technical drawings according to DIN specification.

Drawing-No.: 9.800-5096.01-4
Issue: 5; 20.12.2016


For technical questions, contact: emittertechsupport@vishay.com
THIS DOCUMENT IS SUBJECT TO CHANGE WITHOUT NOTICE. THE PRODUCTS DESCRIBED HEREIN AND THIS DOCUMENT ARE SUBJECT TO SPECIFIC DISCLAIMERS, SET FORTH AT www.vishay.com/doc?91000

# Disclaimer

ALL PRODUCT, PRODUCT SPECIFICATIONS AND DATA ARE SUBJECT TO CHANGE WITHOUT NOTICE TO IMPROVE RELIABILITY, FUNCTION OR DESIGN OR OTHERWISE.

Vishay Intertechnology, Inc., its affiliates, agents, and employees, and all persons acting on its or their behalf (collectively, “Vishay”), disclaim any and all liability for any errors, inaccuracies or incompleteness contained in any datasheet or in any other disclosure relating to any product.

Vishay makes no warranty, representation or guarantee regarding the suitability of the products for any particular purpose or the continuing production of any product. To the maximum extent permitted by applicable law, Vishay disclaims (i) any and all liability arising out of the application or use of any product, (ii) any and all liability, including without limitation special, consequential or incidental damages, and (iii) any and all implied warranties, including warranties of fitness for particular purpose, non-infringement and merchantability.

Statements regarding the suitability of products for certain types of applications are based on Vishay's knowledge of typical requirements that are often placed on Vishay products in generic applications. Such statements are not binding statements about the suitability of products for a particular application. It is the customer's responsibility to validate that a particular product with the properties described in the product specification is suitable for use in a particular application. Parameters provided in datasheets and / or specifications may vary in different applications and performance may vary over time. All operating parameters, including typical parameters, must be validated for each customer application by the customer's technical experts. Product specifications do not expand or otherwise modify Vishay's terms and conditions of purchase, including but not limited to the warranty expressed therein.

Hyperlinks included in this datasheet may direct users to third-party websites. These links are provided as a convenience and for informational purposes only. Inclusion of these hyperlinks does not constitute an endorsement or an approval by Vishay of any of the products, services or opinions of the corporation, organization or individual associated with the third-party website. Vishay disclaims any and all liability and bears no responsibility for the accuracy, legality or content of the third-party website or for that of subsequent links.

Except as expressly indicated in writing, Vishay products are not designed for use in medical, life-saving, or life-sustaining applications or for any other application in which the failure of the Vishay product could result in personal injury or death. Customers using or selling Vishay products not expressly indicated for use in such applications do so at their own risk. Please contact authorized Vishay personnel to obtain written terms and conditions regarding products designed for such applications.

No license, express or implied, by estoppel or otherwise, to any intellectual property rights is granted by this document or by any conduct of Vishay. Product names and markings noted herein may be trademarks of their respective owners.

***© 2024 VISHAY INTERTECHNOLOGY, INC. ALL RIGHTS RESERVED***