High-Side Current Sensor

FAN4010



SIP6 1.45X1.0
CASE 127EB

Description

The FAN4010 is a high−side current sense amplifier designed for battery−powered systems. Using the FAN4010 for high−side power−line monitoring does not interfere with the battery charger's ground path. The FAN4010 is designed for portable PCs, cellular phones, and other portable systems where battery / DC power−line monitoring is critical.

To provide a high level of flexibility, the FAN4010 functions with an external sense resistor to set the range of load current to be monitored. It has a current output that can be converted to a ground−referred voltage with a single resistor, accommodating a wide range of battery voltages and currents. The FAN4010 features allow it to be used for gas gauging as well as uni−directional or bi−directional current monitoring.

Features at +5 V

- Low Cost, Accurate, High−Side Current Sensing
- Output Voltage Scaling
- Up to 2.5 V Sense Voltage
- 2 V to 6 V Supply Range
- 2 μA Typical Offset Current
- 3.5 μA Quiescent Current
- −0.2% Accuracy
- 6−Lead MicroPak™ MLP Package

Applications Battery Chargers

- Battery Chargers
- Smart Battery Packs
- DC Motor Control
- Over−Current Monitor
- Power Management
- Programmable Current Source

MARKING DIAGRAM



PX = Specific Device Code
&K = 2−Digits Lot Run Traceability Code
&2 = 2−Digit Date Code
&Z = Assembly Plant Code

ORDERING INFORMATION

See detailed ordering and shipping information on page 7 of this data sheet.

© Semiconductor Components Industries, LLC, 2007

BLOCK DIAGRAM AND TYPICAL CIRCUIT

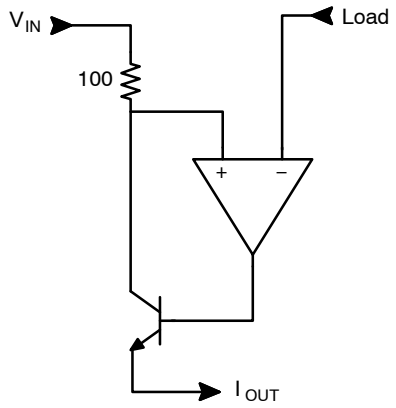

Figure 1. Functional Block Diagram

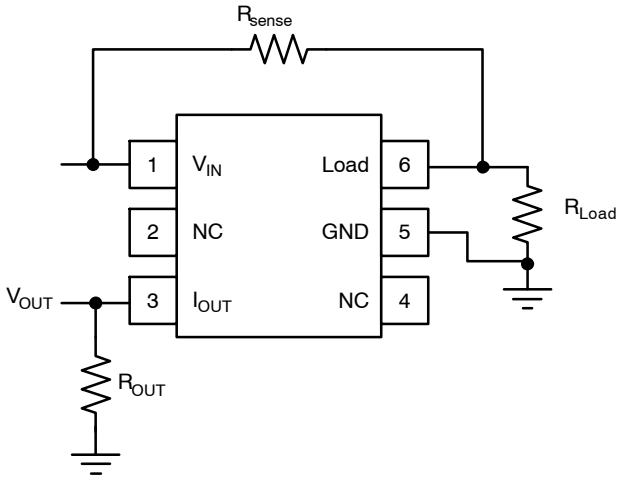

Figure 2. Typical Circuit

PIN CONFIGURATION

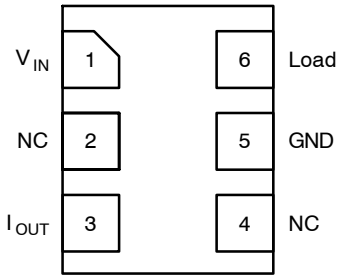

Figure 3. Pin Assignment (Top Through View)

PIN DESCRIPTION

Name	Type	Description
2, 4	NC	No Connect; leave pin floating
5	GND	Ground
3	I_{OUT}	Output Current, proportional to V_{IN}–V_{LOAD}
1	V_{IN}	Input Voltage, Supply Voltage
6	Load	Connection to load or battery

ABSOLUTE MAXIMUM RATINGS

Symbol	Parameter		Min	Typ	Max	Unit
V_S	Supply Voltage		0	–	6.3	V
V_{IN}	Input Voltage Range		0	–	6.3	V
T_J	Junction Temperature		–	–	+150	°C
T_{STG}	Storage Temperature Range		−65	–	+150	°C
T_L	Reflow Temperature, Soldering		–	–	+260	°C
Θ_{JA}	Package Thermal Resistance (Note 1)		–	456	–	°C/W
ESD	Electrostatic Discharge Protection	Human Body Model, JESD22−A114	–	–	5000	V
		Charged Device Model, JESD22−C101	–	–	1000	

Stresses exceeding those listed in the Maximum Ratings table may damage the device. If any of these limits are exceeded, device functionality should not be assumed, damage may occur and reliability may be affected.

1. Package thermal resistance (Θ_{JA}), JEDEC standard, multi−layer test boards, still air.

RECOMMENDED OPERATING CONDITIONS

Symbol	Parameter	Min	Max	Unit
T_A	Operating Temperature Range	−40	+85	°C
V_S	Supply Voltage Range	2	6	V
V_{IN}	Input Voltage	2	6	V
V_{SENSE}	Sensor Voltage Range, $V_{SENSE} = V_{IN} - V_{LOAD}$, $R_{OUT} = 0\ \Omega$	–	2.5	V

Functional operation above the stresses listed in the Recommended Operating Ranges is not implied. Extended exposure to stresses beyond the Recommended Operating Ranges limits may affect device reliability.

ELECTRICAL CHARACTERISTICS AT +5 V (T_A = 25°C, $V_S = V_{IN}$ = 5 V, R_{OUT} = 100 Ω, R_{SENSE} = 100 Ω, unless otherwise noted.)

Symbol	Parameter	Conditions	Min	Typ	Max	Unit
FREQUENCY DOMAIN RESPONSE						
B_{WSS}	Small Signal Bandwidth	P_{IN} = −40 dBm (Note 2), V_{SENSE} = 10 mV	–	600	–	kHz
B_{WLS}	Large Signal Bandwidth	P_{IN} = −20 dBm (Note 3), V_{SENSE} = 100 mV	–	2	–	MHz
V_{IN}	Input Voltage Range	$V_{IN} = V_S$	2	–	6	V
I_{OUT}	Output Current (Note 4, 5)	V_{SENSE} = 0 mV	0	1	9	μA
		V_{SENSE} = 10 mV	90	100	110	
		V_{SENSE} = 100 mV	0.975	1.000	1.025	mA
		V_{SENSE} = 200 mV	1.95	2.00	2.05	
		V_{SENSE} = 1 V	9.7	10.0	10.3	
I_S	Supply Current (Note 4)	V_{SENSE} = 0 V, GND Pin Current	–	3.5	5.0	μA
I_{SENSE}	Load Pin Input Current		–	2	–	nA
A_{CY}	Accuracy	R_{SENSE} = 100 Ω, R_{SENSE} = 200 mV (Note 4)	−2.5	−0.2	2.5	%
G_m	Transconductance	I_{OUT}/V_{SENSE}	–	10000	–	μA/V

Product parametric performance is indicated in the Electrical Characteristics for the listed test conditions, unless otherwise noted. Product performance may not be indicated by the Electrical Characteristics if operated under different conditions.

2. −40 dBm = 6.3 mVpp into 50 Ω.
3. −20 dBm = 63 mVpp into 50 Ω.
4. 100% tested at 25°C.
5. Includes input offset voltage contribution.

TYPICAL PERFORMANCE CHARACTERISTICS

(T_A = 25°C, V_S = V_{IN} = 5 V, R_{OUT} = 100 Ω, R_{SENSE} = 100 Ω, unless otherwise noted.)

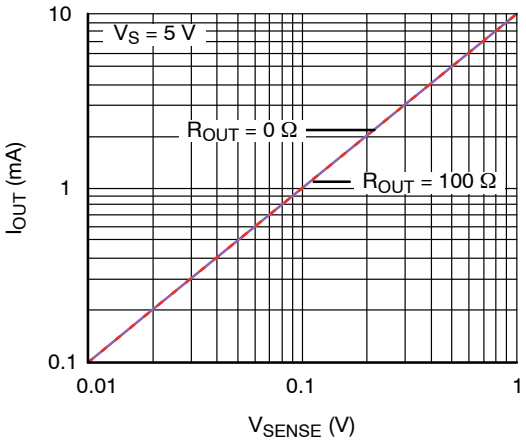

Figure 4. V_{SENSE} vs. Output Current

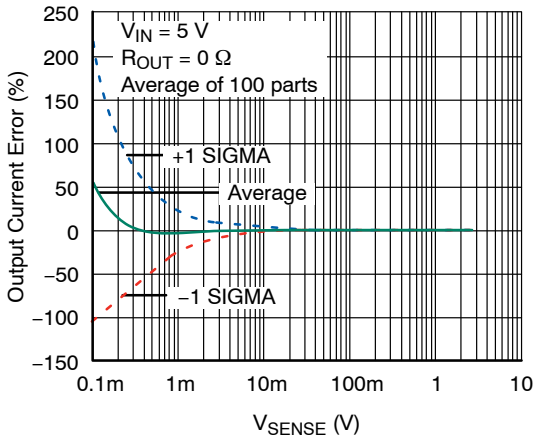

Figure 5. Output Current Error vs. V_{SENSE}

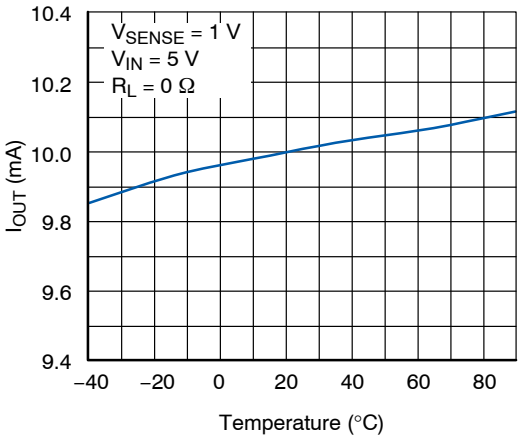

Figure 6. Output Current vs. Temperature

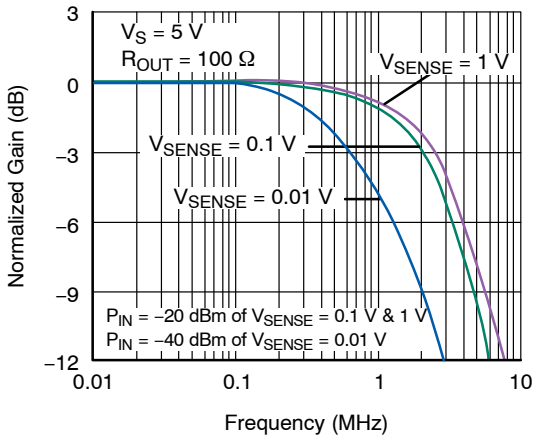

Figure 7. Frequency Response

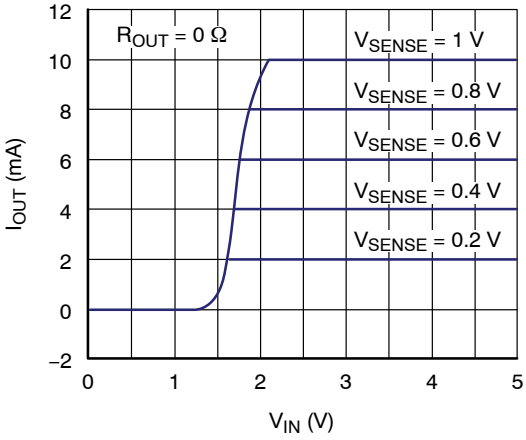

Figure 8. Transfer Characteristics

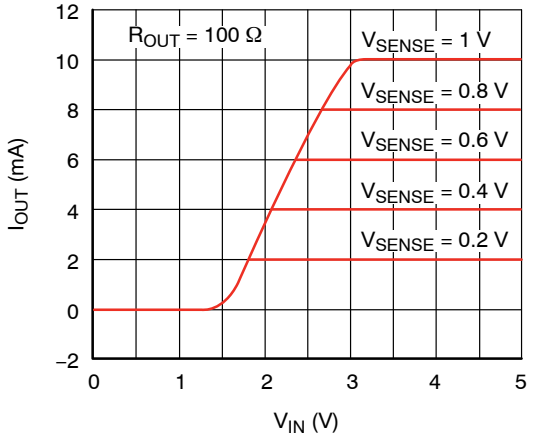

Figure 9. Transfer Characteristics

TYPICAL PERFORMANCE CHARACTERISTICS (Continued)

(T_A = 25°C, V_S = V_{IN} = 5 V, R_{OUT} = 100 Ω, R_{SENSE} = 100 Ω, unless otherwise noted.)

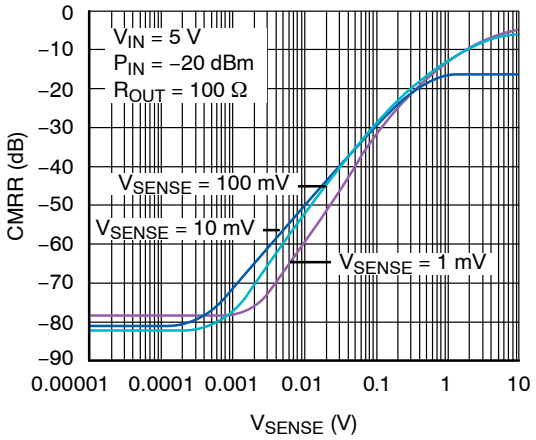

Figure 10. CMRR vs. Frequency

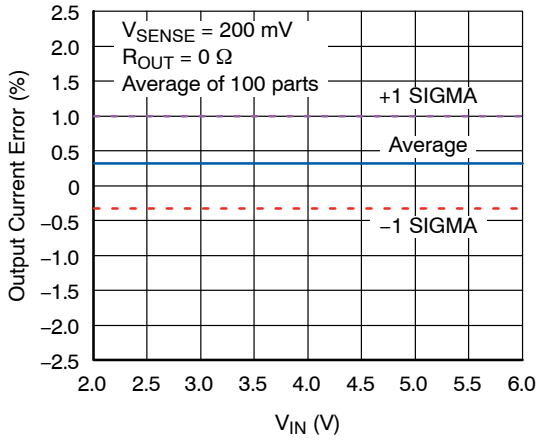

Figure 11. Output Current Error

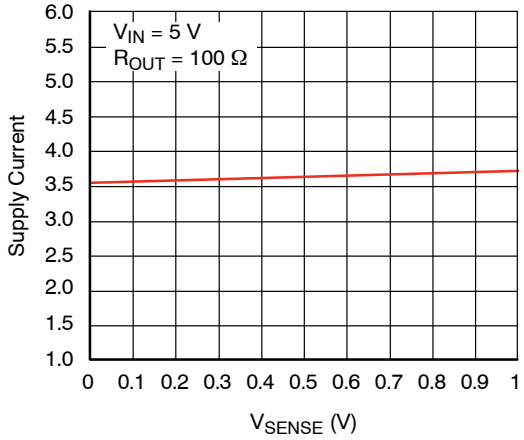

Figure 12. Supply Current vs. V_{SENSE}

APPLICATION INFORMATION

Detailed Description

The FAN4010 measures the voltage drop (V_{SENSE}) across an external sense resistor in the high−voltage side of the circuit. V_{SENSE} is converted to a linear current via an internal operational amplifier and precision 100 Ω resistor. The value of this current is V_{SENSE}/100 Ω (internal). Output current flows from the I_{OUT} pin to an external resistor R_{OUT} to generate an output voltage proportional to the current flowing to the load.

Use the following equations to scale a load current to an output voltage:

$$V_{SENSE} = I_{LOAD} \cdot R_{SENSE} \quad \text{(eq. 1)}$$

$$V_{OUT} = 0.01 \times V_{SENSE} \times R_{OUT} \quad \text{(eq. 2)}$$

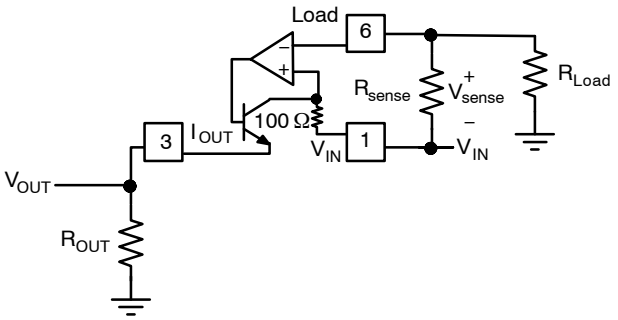

Figure 13. Functional Circuit

Selecting R_{SENSE}

Selection of R_{SENSE} is a balance between desired accuracy and allowable voltage loss. Although the FAN4010 is optimized for high accuracy with low V_{SENSE} values, a larger R_{SENSE} value provides additional accuracy. However, larger values of R_{SENSE} create a larger voltage drop, reducing the effective voltage available to the load. This can be troublesome in low−voltage applications. Because of this, the maximum expected load current and allowable load voltage should be well understood. Although higher values of V_{SENSE} can be used, R_{SENSE} should be chosen to satisfy the following condition:

$$10\ mV < V_{SENSE} < 200\ mV \quad \text{(eq. 3)}$$

For low−cost applications where accuracy is not as important, a portion of the printed circuit board (PCB) trace can be used as an R_{SENSE} resistor. Figure 14 shows an example of this configuration. The resistivity of a 0.1−inch wide trace of two−ounce copper is about 30 mΩ/ft. Unfortunately, the resistance temperature coefficient is relatively large (approximately 0.4%/°C), so systems with a wide temperature range may need to compensate for this effect. Additionally, self heating due to load currents introduces a nonlinearity error. Care must be taken not to exceed the maximum power dissipation of the copper trace.

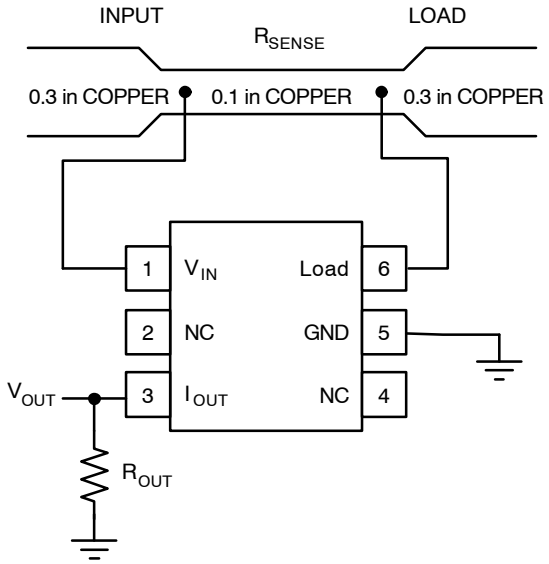

Figure 14. Using PCB Trace for R_{SENSE}

Selecting R_{OUT}

R_{OUT} can be chosen to obtain the output voltage range required for the particular downstream application. For example, if the output of the FAN4010 is intended to drive an analog−to−digital convertor (ADC), R_{OUT} should be chosen such that the expected full−scale output current produces an input voltage that matches the input range of the ADC. For instance, if expected loading current ranges from 0 to 1 A, an R_{SENSE} resistor of 1 Ω produces an output current that ranges from 0 to 10 mA. If the input voltage range of the ADC is 0 to 2 V, an R_{OUT} value of 200 Ω should be used. The input voltage and full−scale output current (I_{OUT_FS}) needs to be taken into account when setting up the output range. To ensure sufficient operating headroom, choose:

$$(R_{OUT} \cdot I_{OUT_{FS}}) \text{ such that}$$
$$V_{IN} - V_{SENSE} - (R_{OUT} \cdot I_{OUT_{FS}}) > 1.6\ V \quad \text{(eq. 4)}$$

Output current accuracy for the recommended V_{SENSE} between 10 mV and 200 mV are typically better than 1%. As a result, the absolute output voltage accuracy is dependent on the precision of the output resistor.

Make sure the input impedance of the circuit connected to V_{OUT} is much higher than R_{OUT} to ensure accurate V_{OUT} values.

Since the FAN4010 provides a trans−impedance function, it is suitable for applications involving current rather than voltage sensing.

ORDERING INFORMATION

Device	Operating Temperature Range	Top Mark	Package	Shipping†
FAN4010IL6X	−40°C to +85°C	PX	6−Lead, Molded Leadless Package (MLP) (Pb−Free)	5000 / Tape & Reel
FAN4010IL6X−F113 (Note 6)				

†For information on tape and reel specifications, including part orientation and tape sizes, please refer to our Tape and Reel Packaging Specifications Brochure, BRD8011/D.

6. Legacy product number; please order FAN4010IL6X for new designs.
7. All packages are lead free per JEDEC: J−STD−020B standard.
8. Moisture sensitivity level for all parts is MSL−1.

MicroPak is trademark of Semiconductor Components Industries, LLC (SCILLC) or its subsidiaries in the United States and/or other countries.

MECHANICAL CASE OUTLINE
PACKAGE DIMENSIONS

ON Semiconductor®

SIP6 1.45X1.0
CASE 127EB
ISSUE O

DATE 31 AUG 2016

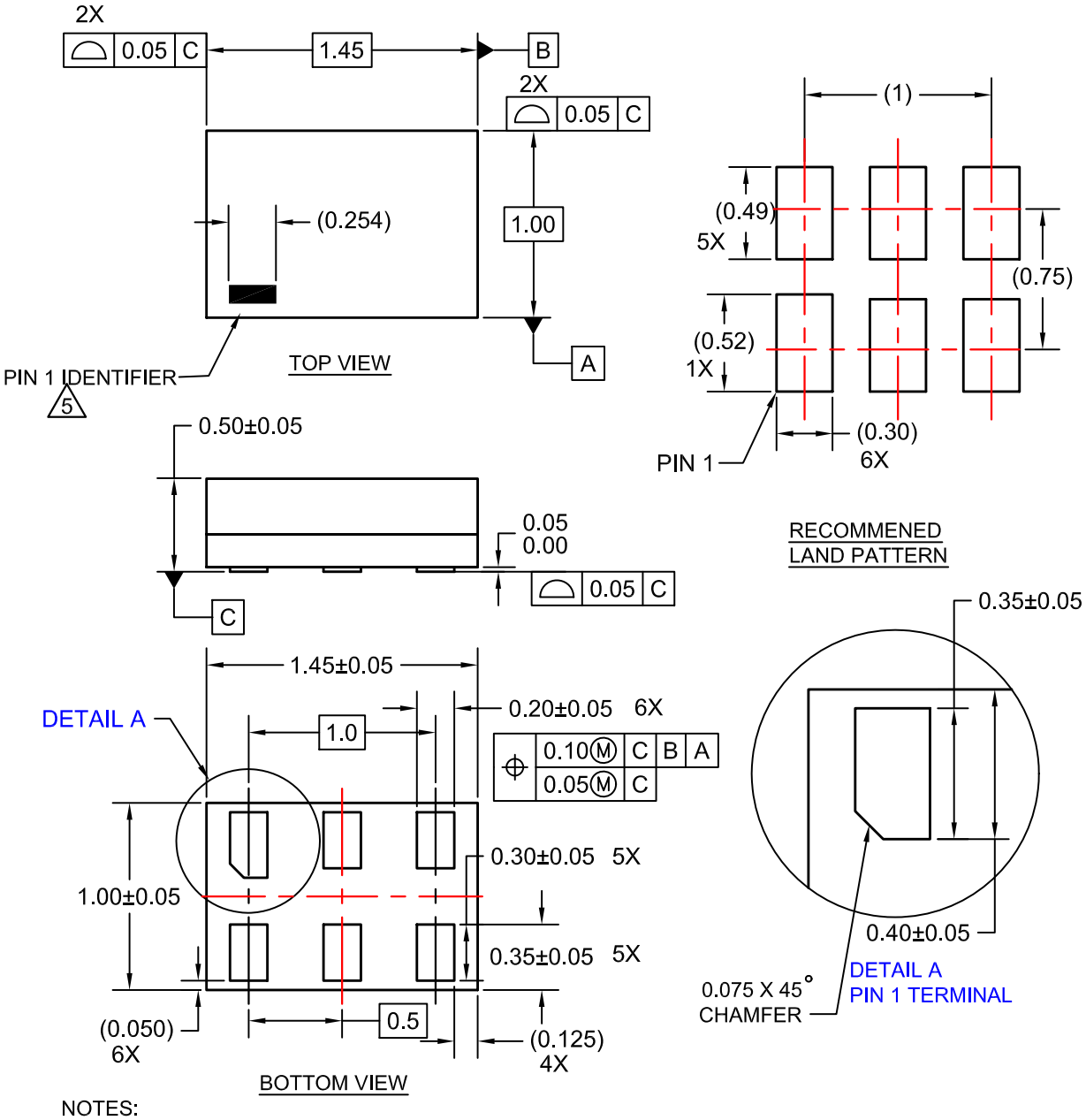

NOTES:

1. CONFORMS TO JEDEC STANDARD MO-252 VARIATION UAAD
2. DIMENSIONS ARE IN MILLIMETERS
3. DRAWING CONFORMS TO ASME Y14.5M-2009
4. PIN ONE IDENTIFIER IS 2X LENGTH OF ANY OTHER LINE IN THE MARK CODE LAYOUT.

DOCUMENT NUMBER:	**98AON13590G**	Electronic versions are uncontrolled except when accessed directly from the Document Repository. Printed versions are uncontrolled except when stamped "CONTROLLED COPY" in red.
DESCRIPTION:	**SIP6 1.45X1.0**	**PAGE 1 OF 1**

ON Semiconductor and ON are trademarks of Semiconductor Components Industries, LLC dba ON Semiconductor or its subsidiaries in the United States and/or other countries. ON Semiconductor reserves the right to make changes without further notice to any products herein. ON Semiconductor makes no warranty, representation or guarantee regarding the suitability of its products for any particular purpose, nor does ON Semiconductor assume any liability arising out of the application or use of any product or circuit, and specifically disclaims any and all liability, including without limitation special, consequential or incidental damages. ON Semiconductor does not convey any license under its patent rights nor the rights of others.

onsemi, , and other names, marks, and brands are registered and/or common law trademarks of Semiconductor Components Industries, LLC dba "**onsemi**" or its affiliates and/or subsidiaries in the United States and/or other countries. **onsemi** owns the rights to a number of patents, trademarks, copyrights, trade secrets, and other intellectual property. A listing of **onsemi**'s product/patent coverage may be accessed at www.onsemi.com/site/pdf/Patent−Marking.pdf. **onsemi** reserves the right to make changes at any time to any products or information herein, without notice. The information herein is provided "as−is" and **onsemi** makes no warranty, representation or guarantee regarding the accuracy of the information, product features, availability, functionality, or suitability of its products for any particular purpose, nor does **onsemi** assume any liability arising out of the application or use of any product or circuit, and specifically disclaims any and all liability, including without limitation special, consequential or incidental damages. Buyer is responsible for its products and applications using **onsemi** products, including compliance with all laws, regulations and safety requirements or standards, regardless of any support or applications information provided by **onsemi**. "Typical" parameters which may be provided in **onsemi** data sheets and/or specifications can and do vary in different applications and actual performance may vary over time. All operating parameters, including "Typicals" must be validated for each customer application by customer's technical experts. **onsemi** does not convey any license under any of its intellectual property rights nor the rights of others. **onsemi** products are not designed, intended, or authorized for use as a critical component in life support systems or any FDA Class 3 medical devices or medical devices with a same or similar classification in a foreign jurisdiction or any devices intended for implantation in the human body. Should Buyer purchase or use **onsemi** products for any such unintended or unauthorized application, Buyer shall indemnify and hold **onsemi** and its officers, employees, subsidiaries, affiliates, and distributors harmless against all claims, costs, damages, and expenses, and reasonable attorney fees arising out of, directly or indirectly, any claim of personal injury or death associated with such unintended or unauthorized use, even if such claim alleges that **onsemi** was negligent regarding the design or manufacture of the part. **onsemi** is an Equal Opportunity/Affirmative Action Employer. This literature is subject to all applicable copyright laws and is not for resale in any manner.

ADDITIONAL INFORMATION

TECHNICAL PUBLICATIONS:
Technical Library: www.onsemi.com/design/resources/technical−documentation
onsemi Website: www.onsemi.com

ONLINE SUPPORT: www.onsemi.com/support
For additional information, please contact your local Sales Representative at www.onsemi.com/support/sales