NextGen Components,Inc.

PART CODE: FK10M7000SVA20

SPECIFICATION SHEET

SPECIFICATION SHEET NO.	R0525- FK10M7000SVA20	
DATE	May 25, 2024	
REVISION	A2	Updated With Most Recent Data
DESCRIPTION AND MAIN PARAMETRICS	SMD MHz Ceramic Filter, L7.0*W3.0*H1.5mm, 3 Pads, FK Series 10.700MHz, 3dB Bandwidth kHz (Min.) 330±50KHz Insertion Loss: 4.0±2.0dB Input/Output Impedance: 330Ω Operating Temp. Range -20°C ~+80°C Packed in Tape/Reel RoHS III/REACH Compliant	
CUSTOMER		
CUSTOMER PART NO.		
CROSS REF. PART NO.		
ORIGINAL MFG/PART NO.	TGS/CF73 10.7MVA20 TLH/LTCV10.7MA20/LTCV10.7MA20UAC0-R1	
PART CODE	FK10M7000SVA20	

VENDOR APPROVE
Issued/Checked/Approved 
DATE: May 25, 2024

CUSTOMER APPROVE
DATE:

NextGen Components, Inc. sales@NextGenComponent.com www.NextGenComponent.com

PART CODE: **FK10M7000SVA20**

SMD MHZ CERAMIC FILTER 10.7MHZ FK SERIES

MAIN FEATURE

- SMD MHz Ceramic Filter, L7.0*W3.0*H1.5mm, 3 Pads
- Low Cost & Short Lead Time.
- REACH/RoHS III Complaint
- Cross Main Competitor Parts in Market

APPLICATION

- Communication Electronics and more

ELECTRICAL CHARACTERISTICS

- See Page 5~Page 6 For Different Part Code

SMD MHZ CERAMIC FILTER 10.7MHZ FK SERIES

HOW TO ORDER

- Please Follow Up Part Code Guide And Indicate Pat Code When You Order Or RFQ For Custom Specification

PART CODE GUIDE

RFQ
Request For Quotation

CODE	NAME	KEY SPECIFICATION OPTION
FK	Product Series Code	SMD MHz Ceramic Filter, L7.0*W3.0*H1.5mm, 3 Pads
10M7	Frequency Range Code	10M7: 10.7000MHz
000S	Internal Control Code	Custom letter A~Z, a-z or Digits (0-9)
VA20	Main Specification Code	0AJ: 3dB Bandwidth kHz (Min.) 150±40KHz, Insertion Loss:10.0dB Max. 0VJ: 3dB Bandwidth kHz (Min.) 150±40KHz, Insertion Loss:5.5±2.0dB AS3: 3dB Bandwidth kHz (Min.) 180±40KHz, Insertion Loss:7.0dB Max. VS3: 3dB Bandwidth kHz (Min.) 180±40KHz, Insertion Loss:4.0±2.0dB AS2: 3dB Bandwidth kHz (Min.) 230±50KHz, Insertion Loss:6.0dB Max. VS2: 3dB Bandwidth kHz (Min.) 230±50KHz, Insertion Loss:3.5±2.0dB AA5: 3dB Bandwidth kHz (Min.) 280±50KHz, Insertion Loss:6.0dB Max. VA5: 3dB Bandwidth kHz (Min.) 280±50KHz, Insertion Loss:3.0±2.0dB VA20: 3dB Bandwidth kHz (Min.) 330±50KHz, Insertion Loss:4.0±2.0dB VA19: 3dB Bandwidth kHz (Min.) Fn±175KHz, Insertion Loss:3.0±2.0dB 0HY: 3dB Bandwidth kHz (Min.) 110±30KHz, Insertion Loss:6.0±2.0dB

SMD MHZ CERAMIC FILTER 10.7MHZ FK SERIES

DIMENSION (Unit: mm)

Image for reference



Marking:

See Page 6 Marking List

For different Part code

FK series Case Dimension,

L7.0*W3.0*H1.5mm

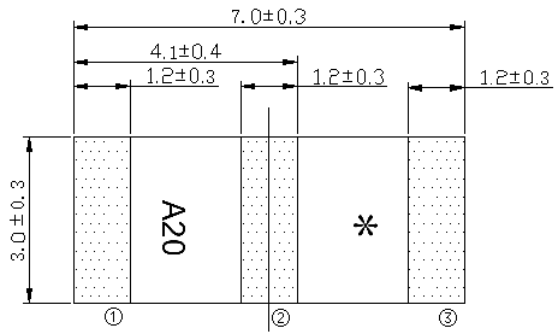

*: QC Code

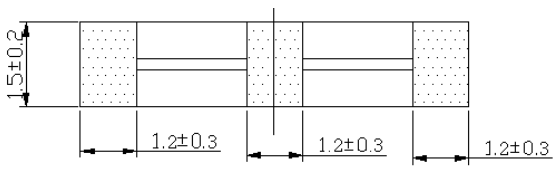

(1): Input

(2): Ground

(3): Output

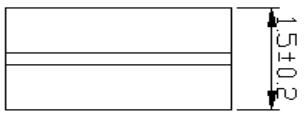

Structure

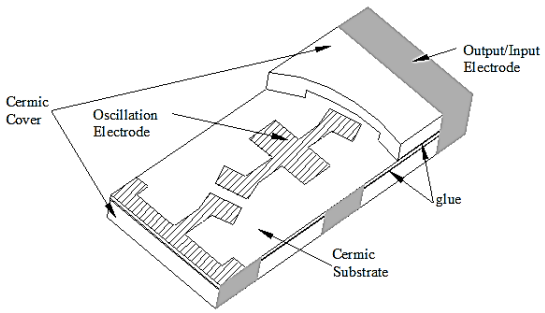

SMD MHZ CERAMIC FILTER 10.7MHZ FK SERIES

ELECTRICAL SPECIFICATIONS - Rating

PARAMETER	SYMBOLS	VALUE	UNITS
Withstanding Voltage Max. @DC, 1 min.	-	50	V
Insulation Resistance Min. @10V, 1 min.	R_i	100	mΩ
Operating Junction e Temperature Range	T_J	-20 to +80	°C
Storage Temperature Range	T_{STG}	-40 to +85	°C

ELECTRICAL CHARACTERISTICS FOR DIFFERENT PART CODE- PART I

PART CODE	Center Frequency	3dB Bandwidth Min.	20dB Bandwidth Max.	Insertion Loss @Min. Loss Point	Ripple Max. (Within 3dB Bandwidth)
	MHz	KHz	KHz	dB	dB
FK10M70000S0AJ	10.7±0.03	150±40	430	10.0 Max.	1.0
FK10M70000S0VJ	10.7±0.03	150±40	380	5.5±2.0	1.0
FK10M70000SAS3	10.7±0.03	180±40	520	7.0 Max.	1.0
FK10M70000SVS3	10.7±0.03	180±40	470	4.0±2.0	1.0
FK10M70000SAS2	10.7±0.03	230±50	570	6.0 Max.	1.0
FK10M70000SVS2	10.7±0.03	230±50	510	3.5±2.0	1.0
FK10M70000SAA5	10.7±0.03	280±50	650	6.0 Max.	1.0
FK10M70000SVA5	10.7±0.03	280±50	590	3.0±2.0	1.0
FK10M7000SVA20	10.7±0.03	330±50	680	4.0±2.0	1.0
FK10M7000SVA19	10.7±0.03	Fn±175	950	3.0±2.0	3.0
FK10M70000S0HY	10.7±0.03	110±30	320	6.0±2.0	1.0

SMD MHZ CERAMIC FILTER 10.7MHZ FK SERIES

ELECTRICAL CHARACTERISTICS FOR DIFFERENT PART CODE- PART II

PART CODE	Center Frequency	Spurious Attenuation Min.	Input/Output Impedance	Temperature Characteristic @ –20°C to 80°C	Marking List
	MHz	dB	Ω	%	
FK10M70000S0AJ	10.7±0.03	30 @9~12MHz	330	±0.5	MJ
FK10M70000S0VJ	10.7±0.03	35 @9~12MHz	330	±0.5	MJ
FK10M70000SAS3	10.7±0.03	30 @9~12MHz	330	±0.5	S3
FK10M70000SVS3	10.7±0.03	35 @9~12MHz	330	±0.5	S3
FK10M70000SAS2	10.7±0.03	30 @9~12MHz	330	±0.5	S2
FK10M70000SVS2	10.7±0.03	35 @9~12MHz	330	±0.5	S2
FK10M70000SAA5	10.7±0.03	30 @9~12MHz	330	±0.5	A5
FK10M70000SVA5	10.7±0.03	35 @9~12MHz	330	±0.5	A5
FK10M7000SVA20	10.7±0.03	30 @9~12MHz	330	±0.5	A20
FK10M7000SVA19	10.7±0.03	20 @5~15MHz	470	±0.5	A19
FK10M70000S0HY	10.7±0.03	35 @9~12MHz	330	±0.5	HY

TEST CIRCUIT - For Reference Only

Parts shall be tested under the condition (Temp.: 20±15℃,Humidity 65±20% R.H.) unless the standard condition

(Temp.: 25±3 ℃, Humidity : 65±10% R.H.)is regulated to measure.

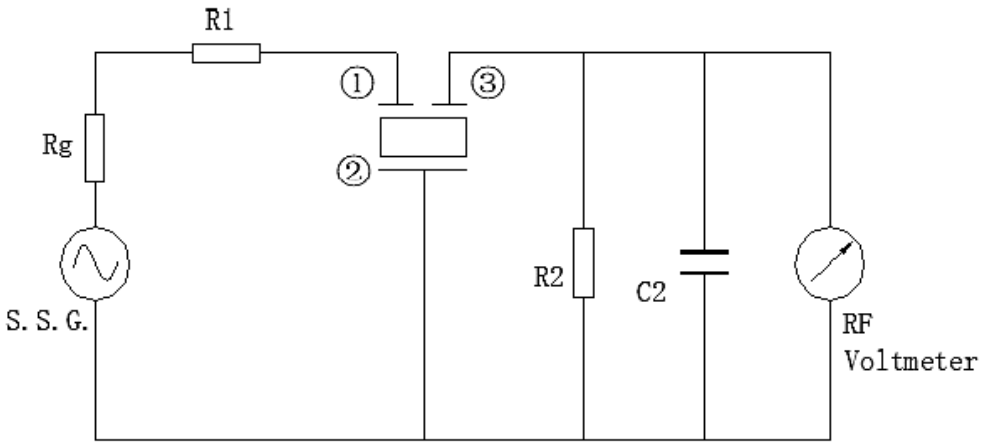

R1+Rg =R2=330Ω±5%,Rg=50Ω; C2=10 PF (Including stray capacitance and capacitance of RF Voltmeter)

S.S.G:Output Voltmeter; (1): Input (2): Ground (3): Output

RELIABILITY

TEST ITEMS	TEST METHOD AND CONDITIONS	REQUIREMENT
Humidity	After being placed in a chamber with 90-95% R.H. at 40±2℃ for 96 hours and then being placed in room temperature for 1 hour, filter shall be measured.	It shall meet Specification
High Temperature	After being placed in a chamber with 85±2 ℃,for 96 hours and then being placed in room temperature for 1 hour, filter shall be measured.	It shall meet Specification
Low Temperature	After being placed in a chamber with -40±2 ℃,for 96 hours and then being placed in room temperature for 1 hour, filter shall be measured.	It shall meet Specification
Temperature Cycling	After temperature cycling of blow table was performed 5 times, Filter shall be measured after being placed in natural conditions for 1h. Temp.: –20±3℃, Time: 30±3 min ; Temp.: –80±3℃, Time: 30±3 min.	It shall meet Specification
Vibration	Subject the filter to vibration for 2h.Each in x y and z axis with the amplitude of 1.5mm, The frequency shall be varied uniformly between the limits of 10Hz-55Hz-10Hz and then filter shall be measured.	It shall meet Specification
Mechanical Shock	Filter shall be measured after 3 times random dropping from the height of 1m on the wooden plate.	It shall meet Specification
Soldering Test	Passed through the reflow oven under the following condition, and left at room temp. for 24 hours before measurement.	It shall meet Specification
Solderability	Dipped in 235℃±5℃ solder bath for 3s±0.5s with rosin flux (25wt% ethanol solution.) see *Suggested Reflow Profile*	The terminals shall be at least 95% covered by solder.
Board Bending	Mount on a glass-epoxy board(width =50mm, thickness=1.6mm),then bend it to 1mm displacement(velocity= 1mm/s) and keep it for 5s.	Mechanical damage such as break shall not occur

SMD MHZ CERAMIC FILTER 10.7MHZ FK SERIES

Table 1

TEST ITEMS	CHARACTERISTICS AFTER TEST	
	VALUE	UNITS
Center Frequency Drift Max.	±30	kHz
Insertion Loss Drift Max.	±2.0	dB
3dB Bandwidth Drift Max.	±25	kHz
20dB Bandwidth Drift Max.	±60	kHz
Note: The limits in the above table are referenced to the initial measurements.		

Soldering Test

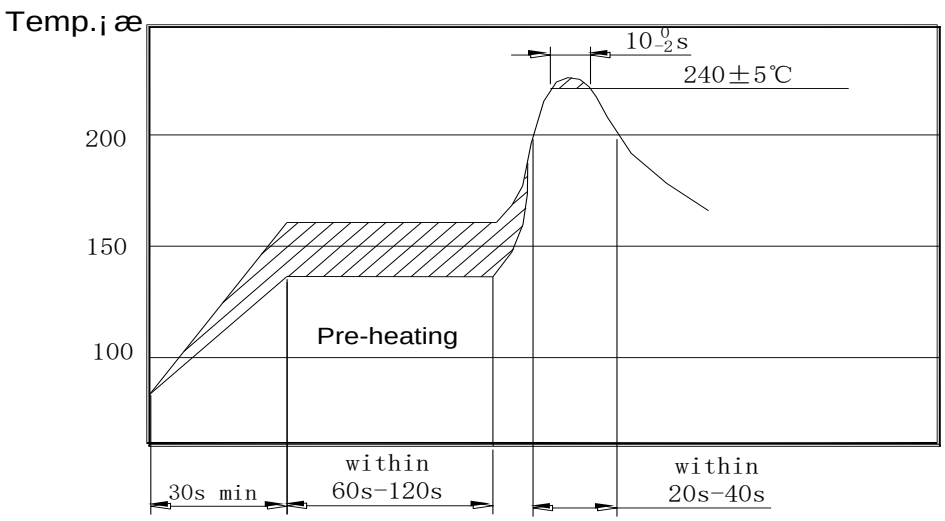

Board Bending

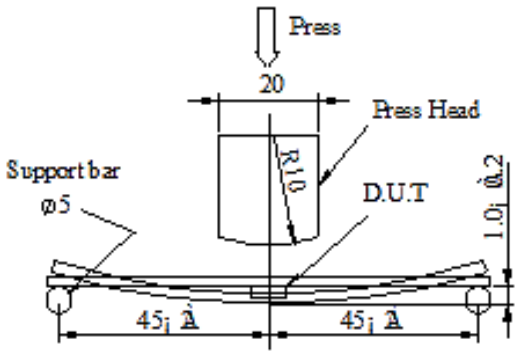

SUGGESTED REFLOW PROFILE - For Reference Only

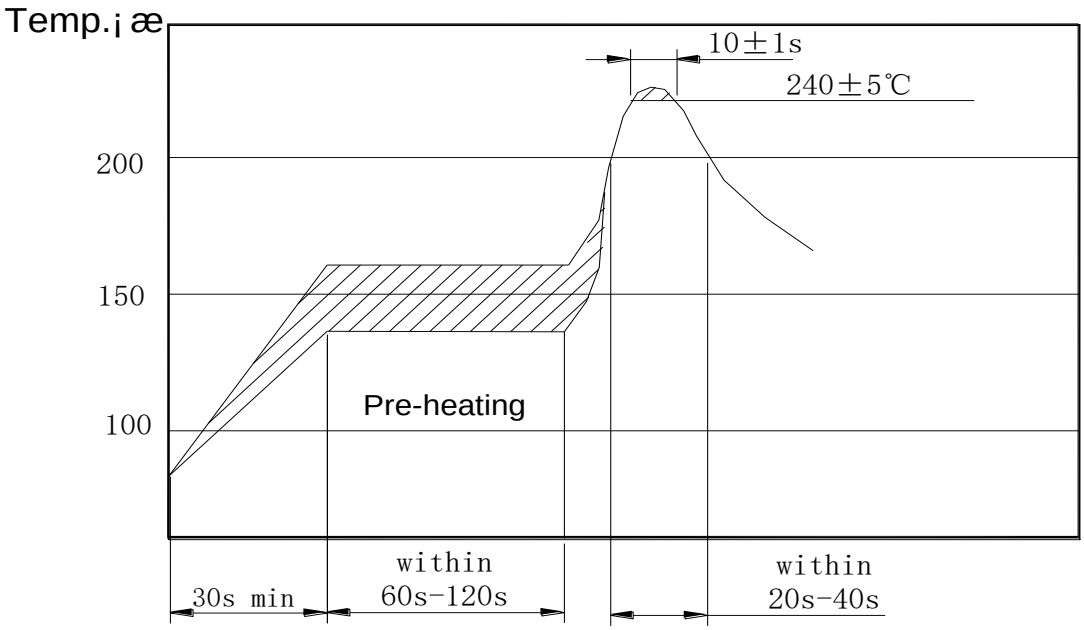

RECOMMENDED LAND PATTERN- (Unit: mm)

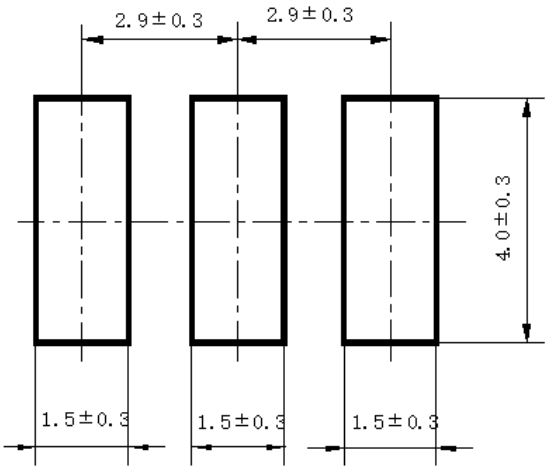

(1): Input

(2): Ground

(3): Output

SMD MHZ CERAMIC FILTER 10.7MHZ FK SERIES

TPAE/REEL DIMENSIONS (Unit: mm)

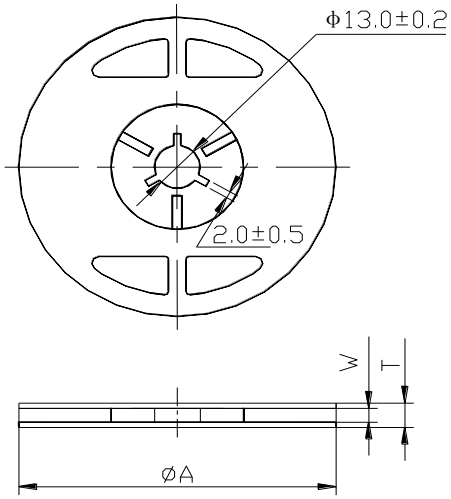

ϕA	W	T	Pieces Per Reel	Carrier Tape Size
330±3	16.4 Min.	22.4 Max.	4000 Typ.	16

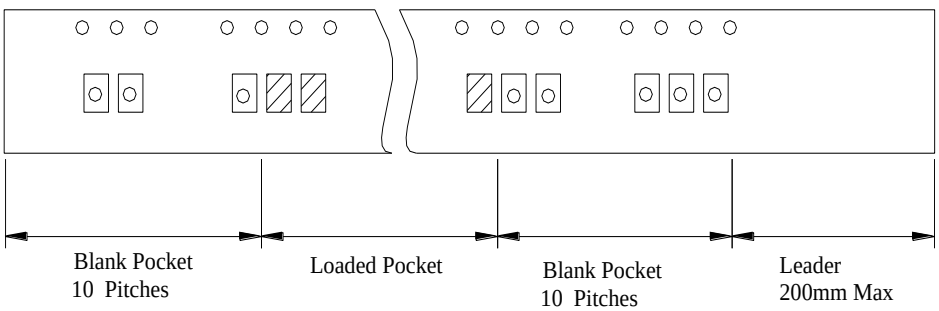

TEST CONDITION OF PEELING STRENGTH

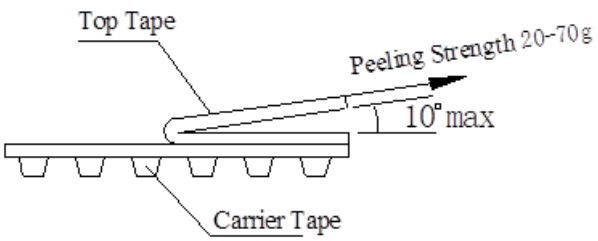

CAUTION

- Don’t apply excess mechanical stress to the component and terminals at soldering. Do not use this product with bend.
- Do not clean or wash the component for it is not hermetically sealed.
- Do not use strong acidity flux, more than 0.2wt% chlorine content, in flow soldering.
- Don’t be close to fire.
- This specification mentions the quality of the component as a single unit. Please insure the component is thoroughly evaluated in your application circuit
- Expire date (Shelf life) of the products is 12 months after delivery under the conditions of a sealed and an unopened package. Please use the products within 12 months after delivery. If you store the products for a long time (more than 12 months), use carefully because the products may be degraded in the solder-ability or rusty. Please confirm solder-ability and characteristics for the products regularly.
- Exposure components under soldering condition that is exceeding our recommendation will increase the failure dangerous.
- Please contact us before using the product as automobile electronic component.
- Please return one of these specifications after your signature of acceptance.
- When something gets doubtful with this specifications, we shall jointly work to get an agreement.
- For questions on technology, prices and delivery, please contact our sales offices or e-mail: sales@NextGenComponent.com .

IMPORTANT NOTES AND DISCLAIMER

1. ROHS COMPLIANCE: The levels of RoHS restricted materials in this product are below the maximum concentration values (also referred to as the threshold limits) permitted for such substances, or are used in an exempted application, in accordance with EU RoHS Directive (EU) 2015/863 EC (RoHS3). RoHS Test Report for this product can be obtained can be obtained at Download Center.
2. REACH COMPLIANCE: REACH substances of high concern (SVHCs) information is available for this product. Since the European Chemical Agency (ECHA) has published notice of their intent to frequently revise the SVHC listing for the foreseeable future, REACH Test Report for this product can be obtained can be obtained at Download Center.
3. All Product parametric performance is indicated in the Electrical Characteristics for the listed herein test conditions, unless otherwise noted. Product performance may not be indicated by the Electrical Characteristics if operated under different conditions.
4. NextGen Component, Inc (*NextGen*) reserves the right to make changes to this document and its products and specifications at any time without notice. Customers should obtain and confirm the latest product information and specifications before final design, purchase or use.
5. *NextGen* makes no warranty, representation or guarantee regarding the suitability of its products for any particular purpose, not does *NextGen* assume any liability for application assistance or customer product design.
6. *NextGen* does not warrant or accept any liability with products which are purchased or used for any unintended or unauthorized application. No license is granted by implication or otherwise under any intellectual property rights of NextGen.
7. *NextGen* products are not authorized for use as critical components in life support devices or systems without express written approval by *NextGen.*
8. *NextGen* requires that customers first obtain an RMA (Returned Merchandise Authorization) number prior to returning any products. Returns must be made within 30 days of the date of invoice, be in the original packaging, unused and like-new condition. At the time of quoting or purchasing, a product may say that it is Non-Cancelable/ Non-Returnable (NCNR). These products are not returnable and not refundable.