MC74LCX240

Low-Voltage CMOS Octal Buffer

With 5 V−Tolerant Inputs and Outputs (3−State, Inverting)

The MC74LCX240 is a high performance, inverting octal buffer operating from a 2.3 to 3.6 V supply. High impedance TTL compatible inputs significantly reduce current loading to input drivers while TTL compatible outputs offer improved switching noise performance. A V_I specification of 5.5 V allows MC74LCX240 inputs to be safely driven from 5 V devices. The MC74LCX240 is suitable for memory address driving and all TTL level bus oriented transceiver applications.

Current drive capability is 24 mA at the outputs. The Output Enable ($\overline{OE}$) input, when HIGH, disables the outputs by placing them in a HIGH Z condition.

Features

- Designed for 2.3 to 3.6 V V_{CC} Operation
- 5 V Tolerant − Interface Capability With 5 V TTL Logic
- Supports Live Insertion and Withdrawal
- I_{OFF} Specification Guarantees High Impedance When V_{CC} = 0 V
- LVTTL Compatible
- LVCMOS Compatible
- 24 mA Balanced Output Sink and Source Capability
- Near Zero Static Supply Current in All Three Logic States (10 μA) Substantially Reduces System Power Requirements
- Latchup Performance Exceeds 500 mA
- ESD Performance:
  - Human Body Model >2000 V
  - Machine Model >200 V
- These Devices are Pb−Free, Halogen Free/BFR Free and are RoHS Compliant

ON Semiconductor®

www.onsemi.com

MARKING DIAGRAMS

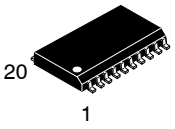

SOIC−20 WB
DW SUFFIX
CASE 751D

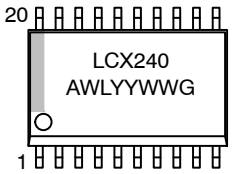

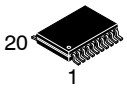

TSSOP−20
DT SUFFIX
CASE 948E

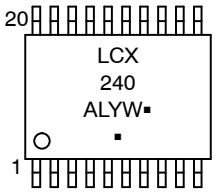

A	= Assembly Location
WL, L	= Wafer Lot
YY, Y	= Year
WW, W	= Work Week
G or ▪	= Pb−Free Package

(Note: Microdot may be in either location)

ORDERING INFORMATION

See detailed ordering and shipping information in the package dimensions section on page 3 of this data sheet.

© Semiconductor Components Industries, LLC, 2012

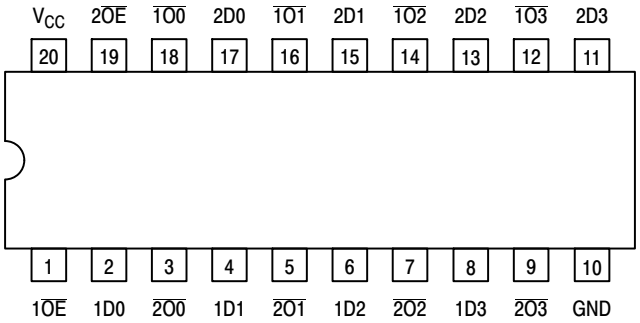

Figure 1. Pinout: 20−Lead (Top View)

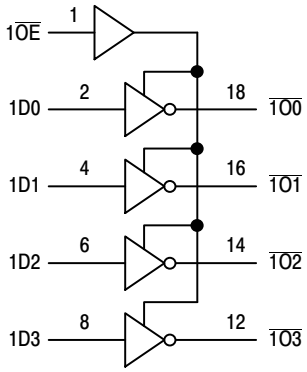

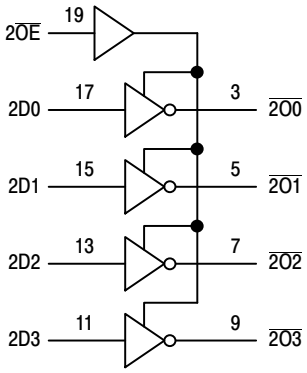

Figure 2. LOGIC DIAGRAM

PIN NAMES

Pins	Function
n$\overline{OE}$	Output Enable Inputs
1Dn, 2Dn	Data Inputs
$\overline{1On}$, $\overline{2On}$	3−State Outputs

TRUTH TABLE

INPUTS		OUTPUTS
$\overline{1OE}$ **$\overline{2OE}$**	**1Dn** **2Dn**	**$\overline{1On}$, $\overline{2On}$**
L	L	H
L	H	L
H	X	Z

H = High Voltage Level
L = Low Voltage Level
Z = High Impedance State
X = High or Low Voltage Level and Transitions Are Acceptable; for I_{CC} reasons, DO NOT FLOAT Inputs

ORDERING INFORMATION

Device	Package	Shipping†
MC74LCX240DTR2G	TSSOP−20 (Pb−Free)	2500 Tape & Reel
MC74LCX240DWR2G	SOIC−20 WB (Pb−Free)	1000 Tape & Reel

†For information on tape and reel specifications, including part orientation and tape sizes, please refer to our Tape and Reel Packaging Specifications Brochure, BRD8011/D.

MAXIMUM RATINGS

Symbol	Parameter	Value	Condition	Units
V_{CC}	DC Supply Voltage	−0.5 to +7.0		V
V_I	DC Input Voltage	$-0.5 \le V_I \le +7.0$		V
V_O	DC Output Voltage	$-0.5 \le V_O \le +7.0$	Output in 3−State	V
		$-0.5 \le V_O \le V_{CC} + 0.5$	Note 1	V
I_{IK}	DC Input Diode Current	−50	V_I < GND	mA
I_{OK}	DC Output Diode Current	−50	V_O < GND	mA
		+50	$V_O > V_{CC}$	mA
I_O	DC Output Source/Sink Current	±50		mA
I_{CC}	DC Supply Current Per Supply Pin	±100		mA
I_{GND}	DC Ground Current Per Ground Pin	±100		mA
T_{STG}	Storage Temperature Range	−65 to +150		°C
MSL	Moisture Sensitivity		Level 1	

Stresses exceeding those listed in the Maximum Ratings table may damage the device. If any of these limits are exceeded, device functionality should not be assumed, damage may occur and reliability may be affected.

1. Output in HIGH or LOW State. I_O absolute maximum rating must be observed.

RECOMMENDED OPERATING CONDITIONS

Symbol	Parameter	Min	Typ	Max	Units
V_{CC}	Supply Voltage Operating Data Retention Only	 2.0 1.5	 3.3 3.3	 3.6 3.6	V
V_I	Input Voltage	0		5.5	V
V_O	Output Voltage HIGH or LOW State 3−State	 0 0		 V_{CC} 5.5	V
I_{OH}	HIGH Level Output Current, V_{CC} = 3.0 V − 3.6 V			−24	mA
I_{OL}	LOW Level Output Current, V_{CC} = 3.0 V − 3.6 V			24	mA
I_{OH}	HIGH Level Output Current, V_{CC} = 2.7 V − 3.0 V			−12	mA
I_{OL}	LOW Level Output Current, V_{CC} = 2.7 V − 3.0 V			12	mA
T_A	Operating Free−Air Temperature	−40		+125	°C
$\Delta t/\Delta V$	Input Transition Rise or Fall Rate, V_{IN} from 0.8 V to 2.0 V, V_{CC} = 3.0 V	0		10	ns/V

DC ELECTRICAL CHARACTERISTICS

Symbol	Characteristic	Condition	T_A = −40°C to +85°C		T_A = −40°C to +125°C		Units
			Min	Max	Min	Max	
V_{IH}	HIGH Level Input Voltage (Note 2)	$2.7 \le V_{CC} \le 3.6$ V	2.0		2.0		V
V_{IL}	LOW Level Input Voltage (Note 2)	$2.7 \le V_{CC} \le 3.6$ V		0.8		0.8	V
V_{OH}	HIGH Level Output Voltage	$2.7 \le V_{CC} \le 3.6$ V; I_{OH} = −100 μA	V_{CC} − 0.2		V_{CC} − 0.2		V
		V_{CC} = 2.7 V; I_{OH} = −12 mA	2.2		2.2		
		V_{CC} = 3.0 V; I_{OH} = −18 mA	2.4		2.4		
		V_{CC} = 3.0 V; I_{OH} = −24 mA	2.2		2.2		

2. These values of V_I are used to test DC electrical characteristics only.

DC ELECTRICAL CHARACTERISTICS (Continued)

Symbol	Characteristic	Condition	T_A = −40°C to +85°C		T_A = −40°C to +125°C		Units
			Min	Max	Min	Max	
V_{OL}	LOW Level Output Voltage	2.7 V ≤ V_{CC} ≤ 3.6 V; I_{OL} = 100 μA		0.2		0.2	V
		V_{CC} = 2.7 V; I_{OL} = 12 mA		0.4		0.4	
		V_{CC} = 3.0 V; I_{OL} = 16 mA		0.4		0.4	
		V_{CC} = 3.0 V; I_{OL} = 24 mA		0.55		0.6	
I_{OZ}	3−State Output Current	V_{CC} = 3.6 V, V_{IN} = V_{IH} or V_{IL}, V_{OUT} = 0 to 5.5 V		±5		±5	μA
I_{OFF}	Power Off Leakage Current	V_{CC} = 0, V_{IN} = 5.5 V or V_{OUT} = 5.5 V		10		10	μA
I_{IN}	Input Leakage Current	V_{CC} = 3.6 V, V_{IN} = 5.5 V or GND		±5		±5	μA
I_{CC}	Quiescent Supply Current	V_{CC} = 3.6 V, V_{IN} = 5.5 V or GND		10		10	μA
ΔI_{CC}	Increase in I_{CC} per Input	2.3 ≤ V_{CC} ≤ 3.6 V; V_{IH} = V_{CC} − 0.6 V		500		500	μA

AC CHARACTERISTICS (t_R = t_F = 2.5 ns; C_L = 50 pF; R_L = 500 Ω)

Symbol	Parameter	Waveform	Limits			Units
			T_A = −40°C to +125°C			
			V_{CC} = 3.0 V to 3.6 V		V_{CC} = 2.7 V	
			Min	Max	Max	
t_{PLH} t_{PHL}	Propagation Delay Input to Output	1	1.5 1.5	6.5 6.5	7.5 7.5	ns
t_{PZH} t_{PZL}	Output Enable Time to High and Low Level	2	1.5 1.5	8.0 8.0	9.0 9.0	ns
t_{PHZ} t_{PLZ}	Output Disable Time From High and Low Level	2	1.5 1.5	7.0 7.0	8.0 8.0	ns
t_{OSHL} t_{OSLH}	Output−to−Output Skew (Note 3)			1.0 1.0		ns

3. Skew is defined as the absolute value of the difference between the actual propagation delay for any two separate outputs of the same device. The specification applies to any outputs switching in the same direction, either HIGH−to−LOW (t_{OSHL}) or LOW−to−HIGH (t_{OSLH}); parameter guaranteed by design.

DYNAMIC SWITCHING CHARACTERISTICS

Symbol	Characteristic	Condition	T_A = +25°C			Units
			Min	Typ	Max	
V_{OLP}	Dynamic LOW Peak Voltage (Note 4)	V_{CC} = 3.3 V, C_L = 50 pF, V_{IH} = 3.3 V, V_{IL} = 0 V		0.8		V
V_{OLV}	Dynamic LOW Valley Voltage (Note 4)	V_{CC} = 3.3 V, C_L = 50 pF, V_{IH} = 3.3 V, V_{IL} = 0 V		0.8		V

4. Number of outputs defined as “n”. Measured with “n−1” outputs switching from HIGH−to−LOW or LOW−to−HIGH. The remaining output is measured in the LOW state.

CAPACITIVE CHARACTERISTICS

Symbol	Parameter	Condition	Typical	Units
C_{IN}	Input Capacitance	V_{CC} = 3.3 V, V_I = 0 V or V_{CC}	7	pF
C_{OUT}	Output Capacitance	V_{CC} = 3.3 V, V_I = 0 V or V_{CC}	8	pF
C_{PD}	Power Dissipation Capacitance	10 MHz, V_{CC} = 3.3 V, V_I = 0 V or V_{CC}	25	pF

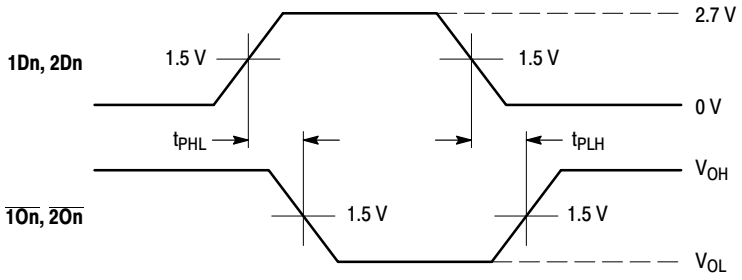

WAVEFORM 1 – PROPAGATION DELAYS
$t_R = t_F$ = 2.5 ns, 10% to 90%; f = 1 MHz; t_W = 500 ns

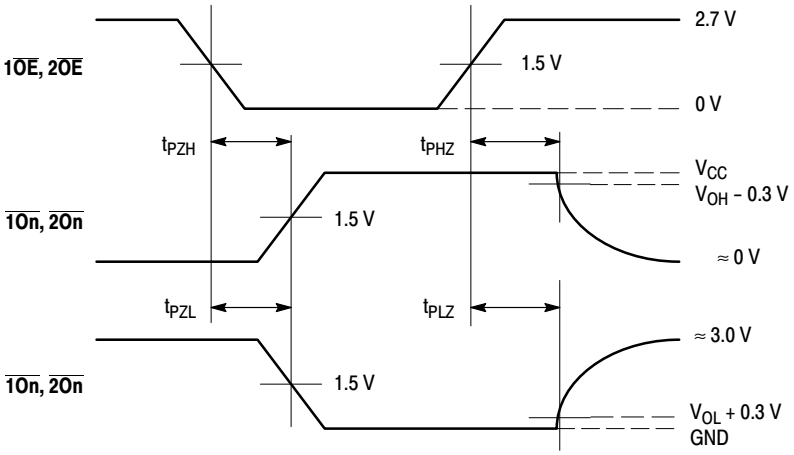

WAVEFORM 2 – OUTPUT ENABLE AND DISABLE TIMES
$t_R = t_F$ = 2.5 ns, 10% to 90%; f = 1 MHz; t_W = 500 ns

Figure 3. Waveforms

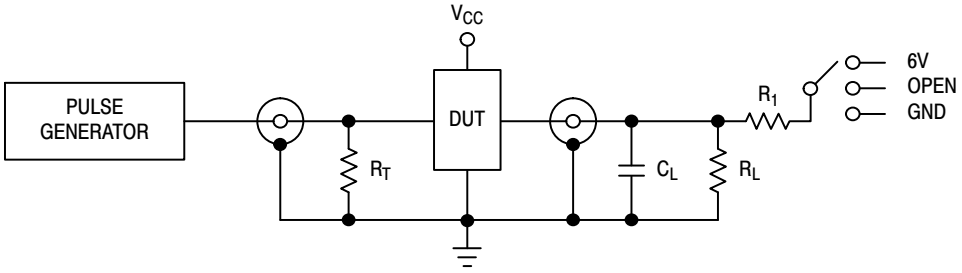

TEST	SWITCH
t_{PLH}, t_{PHL}	Open
t_{PZL}, t_{PLZ}	6V
Open Collector/Drain t_{PLH} and t_{PHL}	6V
t_{PZH}, t_{PHZ}	GND

C_L = 50 pF or equivalent (Includes jig and probe capacitance)
$R_L = R_1$ = 500 Ω or equivalent
$R_T = Z_{OUT}$ of pulse generator (typically 50 Ω)

Figure 4. Test Circuit

MECHANICAL CASE OUTLINE
PACKAGE DIMENSIONS

SOIC−20 WB
CASE 751D−05
ISSUE H

DATE 22 APR 2015

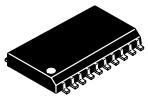

SCALE 1:1

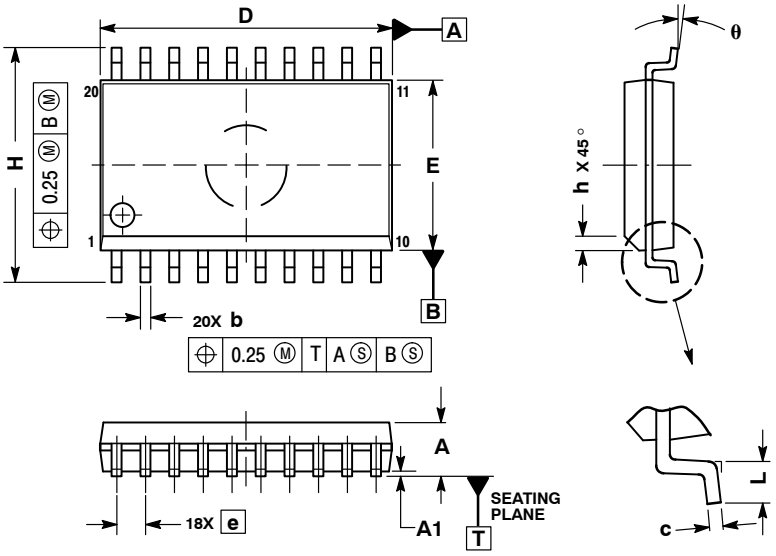

NOTES:
1. DIMENSIONS ARE IN MILLIMETERS.
2. INTERPRET DIMENSIONS AND TOLERANCES PER ASME Y14.5M, 1994.
3. DIMENSIONS D AND E DO NOT INCLUDE MOLD PROTRUSION.
4. MAXIMUM MOLD PROTRUSION 0.15 PER SIDE.
5. DIMENSION B DOES NOT INCLUDE DAMBAR PROTRUSION. ALLOWABLE PROTRUSION SHALL BE 0.13 TOTAL IN EXCESS OF B DIMENSION AT MAXIMUM MATERIAL CONDITION.

	MILLIMETERS	
DIM	MIN	MAX
A	2.35	2.65
A1	0.10	0.25
b	0.35	0.49
c	0.23	0.32
D	12.65	12.95
E	7.40	7.60
e	1.27 BSC	
H	10.05	10.55
h	0.25	0.75
L	0.50	0.90
θ	0°	7°

RECOMMENDED SOLDERING FOOTPRINT*

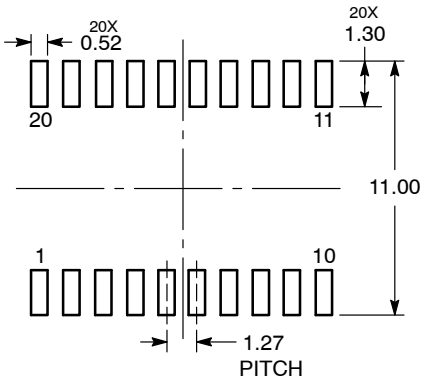

DIMENSIONS: MILLIMETERS

*For additional information on our Pb−Free strategy and soldering details, please download the ON Semiconductor Soldering and Mounting Techniques Reference Manual, SOLDERRM/D.

GENERIC MARKING DIAGRAM*

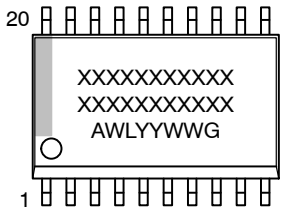

XXXXX = Specific Device Code
A = Assembly Location
WL = Wafer Lot
YY = Year
WW = Work Week
G = Pb−Free Package

*This information is generic. Please refer to device data sheet for actual part marking. Pb−Free indicator, “G” or microdot “▪”, may or may not be present. Some products may not follow the Generic Marking.

DOCUMENT NUMBER:	**98ASB42343B**	Electronic versions are uncontrolled except when accessed directly from the Document Repository. Printed versions are uncontrolled except when stamped “CONTROLLED COPY” in red.
DESCRIPTION:	**SOIC−20 WB**	**PAGE 1 OF 1**

onsemi and ONSEMI. are trademarks of Semiconductor Components Industries, LLC dba **onsemi** or its subsidiaries in the United States and/or other countries. **onsemi** reserves the right to make changes without further notice to any products herein. **onsemi** makes no warranty, representation or guarantee regarding the suitability of its products for any particular purpose, nor does **onsemi** assume any liability arising out of the application or use of any product or circuit, and specifically disclaims any and all liability, including without limitation special, consequential or incidental damages. **onsemi** does not convey any license under its patent rights nor the rights of others.

© Semiconductor Components Industries, LLC, 2019

MECHANICAL CASE OUTLINE
PACKAGE DIMENSIONS

ON Semiconductor®

TSSOP−20 WB
CASE 948E
ISSUE D

DATE 17 FEB 2016

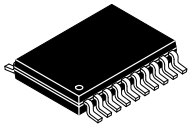

SCALE 2:1

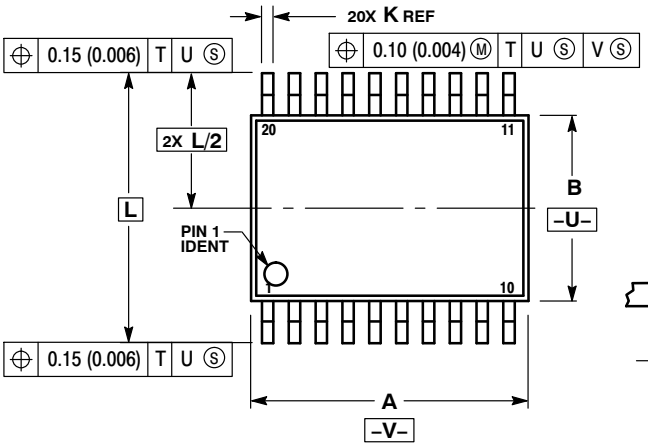

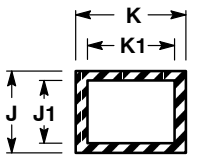

SECTION N−N

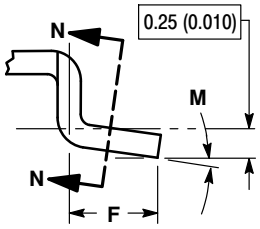

DETAIL E

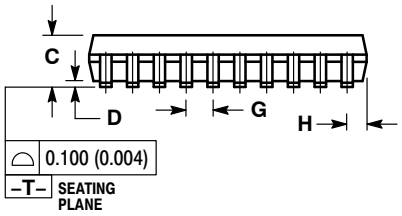

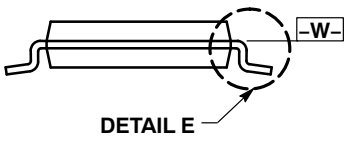

NOTES:
1. DIMENSIONING AND TOLERANCING PER ANSI Y14.5M, 1982.
2. CONTROLLING DIMENSION: MILLIMETER.
3. DIMENSION A DOES NOT INCLUDE MOLD FLASH, PROTRUSIONS OR GATE BURRS. MOLD FLASH OR GATE BURRS SHALL NOT EXCEED 0.15 (0.006) PER SIDE.
4. DIMENSION B DOES NOT INCLUDE INTERLEAD FLASH OR PROTRUSION. INTERLEAD FLASH OR PROTRUSION SHALL NOT EXCEED 0.25 (0.010) PER SIDE.
5. DIMENSION K DOES NOT INCLUDE DAMBAR PROTRUSION. ALLOWABLE DAMBAR PROTRUSION SHALL BE 0.08 (0.003) TOTAL IN EXCESS OF THE K DIMENSION AT MAXIMUM MATERIAL CONDITION.
6. TERMINAL NUMBERS ARE SHOWN FOR REFERENCE ONLY.
7. DIMENSION A AND B ARE TO BE DETERMINED AT DATUM PLANE −W−.

	MILLIMETERS		INCHES	
DIM	MIN	MAX	MIN	MAX
A	6.40	6.60	0.252	0.260
B	4.30	4.50	0.169	0.177
C	---	1.20	---	0.047
D	0.05	0.15	0.002	0.006
F	0.50	0.75	0.020	0.030
G	0.65 BSC		0.026 BSC	
H	0.27	0.37	0.011	0.015
J	0.09	0.20	0.004	0.008
J1	0.09	0.16	0.004	0.006
K	0.19	0.30	0.007	0.012
K1	0.19	0.25	0.007	0.010
L	6.40 BSC		0.252 BSC	
M	0°	8°	0°	8°

SOLDERING FOOTPRINT

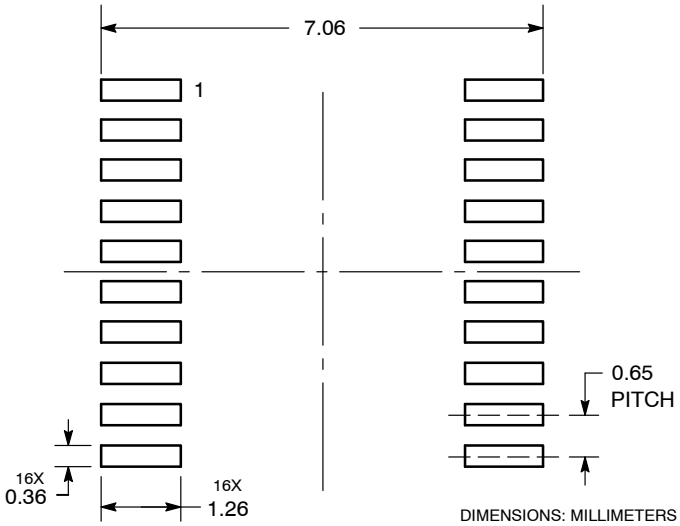

DIMENSIONS: MILLIMETERS

GENERIC MARKING DIAGRAM*

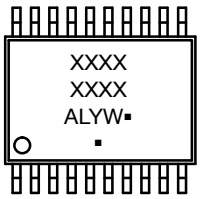

A = Assembly Location
L = Wafer Lot
Y = Year
W = Work Week
▪ = Pb−Free Package

(Note: Microdot may be in either location)

*This information is generic. Please refer to device data sheet for actual part marking. Pb−Free indicator, “G” or microdot “ ▪”, may or may not be present.

DOCUMENT NUMBER:	98ASH70169A	Electronic versions are uncontrolled except when accessed directly from the Document Repository. Printed versions are uncontrolled except when stamped “CONTROLLED COPY” in red.
DESCRIPTION:	TSSOP−20 WB	PAGE 1 OF 1

ON Semiconductor and ON are trademarks of Semiconductor Components Industries, LLC dba ON Semiconductor or its subsidiaries in the United States and/or other countries. ON Semiconductor reserves the right to make changes without further notice to any products herein. ON Semiconductor makes no warranty, representation or guarantee regarding the suitability of its products for any particular purpose, nor does ON Semiconductor assume any liability arising out of the application or use of any product or circuit, and specifically disclaims any and all liability, including without limitation special, consequential or incidental damages. ON Semiconductor does not convey any license under its patent rights nor the rights of others.

© Semiconductor Components Industries, LLC, 2019

onsemi, , and other names, marks, and brands are registered and/or common law trademarks of Semiconductor Components Industries, LLC dba "**onsemi**" or its affiliates and/or subsidiaries in the United States and/or other countries. **onsemi** owns the rights to a number of patents, trademarks, copyrights, trade secrets, and other intellectual property. A listing of **onsemi**'s product/patent coverage may be accessed at www.onsemi.com/site/pdf/Patent−Marking.pdf. **onsemi** reserves the right to make changes at any time to any products or information herein, without notice. The information herein is provided "as−is" and **onsemi** makes no warranty, representation or guarantee regarding the accuracy of the information, product features, availability, functionality, or suitability of its products for any particular purpose, nor does **onsemi** assume any liability arising out of the application or use of any product or circuit, and specifically disclaims any and all liability, including without limitation special, consequential or incidental damages. Buyer is responsible for its products and applications using **onsemi** products, including compliance with all laws, regulations and safety requirements or standards, regardless of any support or applications information provided by **onsemi**. "Typical" parameters which may be provided in **onsemi** data sheets and/or specifications can and do vary in different applications and actual performance may vary over time. All operating parameters, including "Typicals" must be validated for each customer application by customer's technical experts. **onsemi** does not convey any license under any of its intellectual property rights nor the rights of others. **onsemi** products are not designed, intended, or authorized for use as a critical component in life support systems or any FDA Class 3 medical devices or medical devices with a same or similar classification in a foreign jurisdiction or any devices intended for implantation in the human body. Should Buyer purchase or use **onsemi** products for any such unintended or unauthorized application, Buyer shall indemnify and hold **onsemi** and its officers, employees, subsidiaries, affiliates, and distributors harmless against all claims, costs, damages, and expenses, and reasonable attorney fees arising out of, directly or indirectly, any claim of personal injury or death associated with such unintended or unauthorized use, even if such claim alleges that **onsemi** was negligent regarding the design or manufacture of the part. **onsemi** is an Equal Opportunity/Affirmative Action Employer. This literature is subject to all applicable copyright laws and is not for resale in any manner.

ADDITIONAL INFORMATION

TECHNICAL PUBLICATIONS:
Technical Library: www.onsemi.com/design/resources/technical−documentation
onsemi Website: www.onsemi.com

ONLINE SUPPORT: www.onsemi.com/support
For additional information, please contact your local Sales Representative at www.onsemi.com/support/sales