5-520314-5 ✔ ACTIVE

TRIO-MATE

TE Internal #: 5-520314-5

FFC Connectors, Connector Assembly, Wire-to-Board, 5 Position, 2.54 mm [.1 in] Centerline, 1 Row, Right Angle, Socket, Tray, TRIO-MATE

View on TE.com >

Connectors > PCB Connectors > Wire-to-Board Connectors > FFC, FPC & Ribbon Connectors > FFC Connectors



FFC Connector Product Type: **Connector Assembly**

Connector System: **Wire-to-Board**

Number of Positions: **5**

Centerline (Pitch): **2.54 mm [.1 in]**

Number of Rows: **1**

Features

Product Type Features

Connector & Housing Type	Receptacle
Connector & Contact Terminates To	Printed Circuit Board
FFC Connector Product Type	Connector Assembly
Connector System	Wire-to-Board
Insertion Force Type	Low Insertion Force (LIF)

Configuration Features

Number of Positions	5
Number of Rows	1
PCB Mount Orientation	Right Angle

Electrical Characteristics

Dielectric Withstanding Voltage (Max)	1400 VAC
Insulation Resistance	5000 MΩ
Operating Voltage	250 VAC

Body Features

Primary Product Color	Black

Contact Features

Contact Mating Area Plating Material	Tin-Lead
Contact Mating Area Plating Material Finish	Matte

Contact Base Material	Phosphor Bronze
Contact Type	Socket
Contact Current Rating (Max)	1 A

Termination Features

Termination Post & Tail Length	2.54 mm[.1 in]
Termination Method to Printed Circuit Board	Through Hole - Solder

Mechanical Attachment

Mating Alignment Type	Polarization
PCB Mount Retention	With
PCB Mount Retention Type	Z Bend
Mating Retention	Without
Mating Alignment	With
Panel Mount Feature	Without
Connector Mounting Type	Board Mount

Housing Features

Housing Material	Thermoplastic
Centerline (Pitch)	2.54 mm[.1 in]
FFC Cable Entry	Right Angle

Dimensions

PCB Thickness (Recommended)	1.57 mm[.062 in]

Usage Conditions

Operating Temperature Range	-55 - 105 °C[-67 - 221 °F]

Operation/Application

Circuit Application	Signal

Industry Standards

UL Flammability Rating	UL 94V-0

Packaging Features

Packaging Quantity	240
Packaging Method	Tray

Product Compliance

For compliance documentation, visit the product page on TE.com>

EU RoHS Directive 2011/65/EU	Compliant
EU ELV Directive 2000/53/EC	Compliant
China RoHS 2 Directive MIIT Order No 32, 2016	No Restricted Materials Above Threshold
EU REACH Regulation (EC) No. 1907/2006	Current ECHA Candidate List: JAN 2024 (240) Candidate List Declared Against: JAN 2024 (240) Does not contain REACH SVHC
Halogen Content	Not Low Halogen - contains Br or Cl > 900 ppm.
Solder Process Capability	Wave solder capable to 265°C

Product Compliance Disclaimer

This information is provided based on reasonable inquiry of our suppliers and represents our current actual knowledge based on the information they provided. This information is subject to change. The part numbers that TE has identified as EU RoHS compliant have a maximum concentration of 0.1% by weight in homogenous materials for lead, hexavalent chromium, mercury, PBB, PBDE, DBP, BBP, DEHP, DIBP, and 0.01% for cadmium, or qualify for an exemption to these limits as defined in the Annexes of Directive 2011/65/EU (RoHS2). Finished electrical and electronic equipment products will be CE marked as required by Directive 2011/65/EU. Components may not be CE marked. Additionally, the part numbers that TE has identified as EU ELV compliant have a maximum concentration of 0.1% by weight in homogenous materials for lead, hexavalent chromium, and mercury, and 0.01% for cadmium, or qualify for an exemption to these limits as defined in the Annexes of Directive 2000/53/EC (ELV). Regarding the REACH Regulation, the information TE provides on SVHC in articles for this part number is based on the latest European Chemicals Agency (ECHA) 'Guidance on requirements for substances in articles' posted at this URL: https://echa.europa.eu/guidance-documents/guidance-on-reach

Also in the Series | TRIO-MATE



FFC Connectors(66)

Customers Also Bought



TE Part # 5-520315-5
TRIOMATE ASSY V 5P L=3.556LDFR

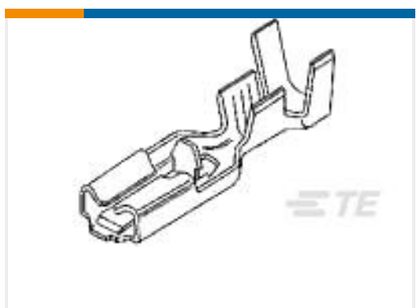

TE Part # 63407-2
PL 187 TERMINAL REC 0.2-0.5 MM2 PTPBR

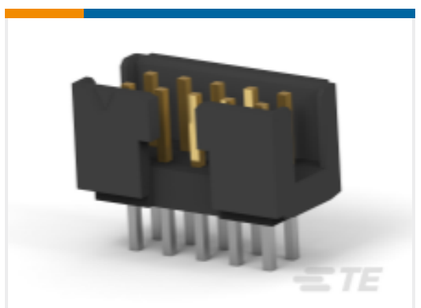

TE Part # 1-2842282-0
10P,2MM,SHRD HDR,DRVT,0.1AU,TB

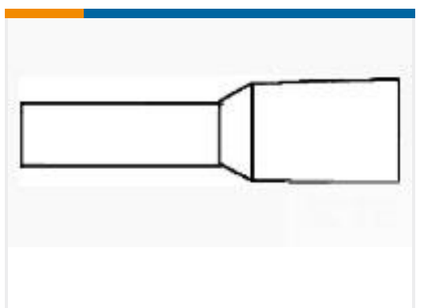

TE Part # 1241003-1
ADERENDH1,5M SCHWA



TE Part # 63232-1
POSITIVE LOCK 187 REC 20-16 AWG TPBR

Documents

Product Drawings

TRIOMATE ASSY H 5P L=2.54 LDFR

English

CAD Files

3D PDF

3D

Customer View Model

ENG_CVM_CVM_5-520314-5_Y.2d_dxf.zip

English

Customer View Model

ENG_CVM_CVM_5-520314-5_Y.3d_igs.zip

English

Customer View Model

ENG_CVM_CVM_5-520314-5_Y.3d_stp.zip

English

By downloading the CAD file I accept and agree to the Terms and Conditionsof use.

Product Specifications

Trio-Mate Flat Flexible Discrete Circuit .100 Connectors

English

Application Specification

Japanese

Application Specification

English