May.1.2024 Copyright 2024 HIROSE ELECTRIC CO., LTD. All Rights Reserved.

GT10 Series

— ECU Interface Connectors —

＜2 mm Pitch＞

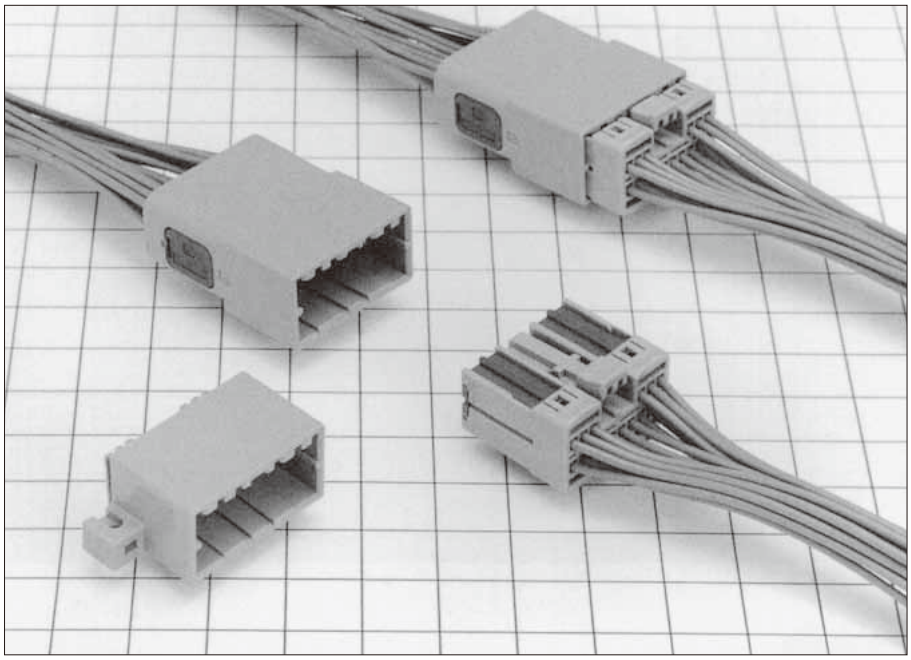

■ Features

- Usable with existing 040 connectors.
- Front retainer design prevents incomplete insertion.

In cases where the application will demand a high level of reliability, such as automotive, please contact a company representative for further information.

F Connectors

● Terminal

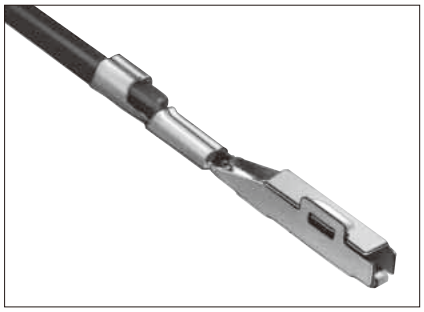

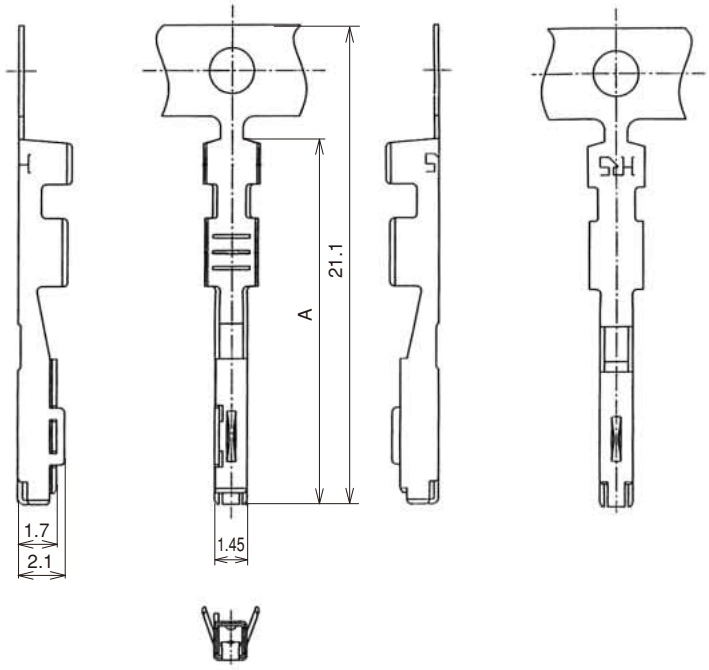

Part No.	HRS No.	Material	Plating	Conductor Size (AWG)	Outer Diameter	A Dimension	Packaging	RoHS
GT10-2022SCF	760-0003-0	Copper palloy	Tin plating	20 to 22 AWG	ϕ1.1 to 1.3	16.1	10,000 pcs/reel	YES
GT10-2428SCF	760-0009-6			24 to 28 AWG	ϕ0.8 to 1.1	15.1		

● Housing (with Retainer Provisionally Mounted)

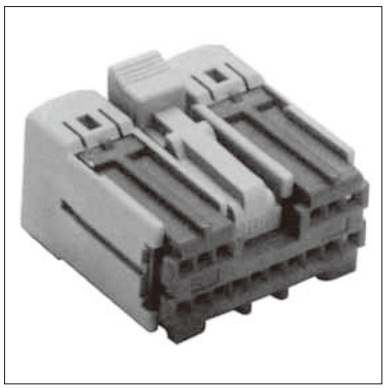

◆Retainer assembled.

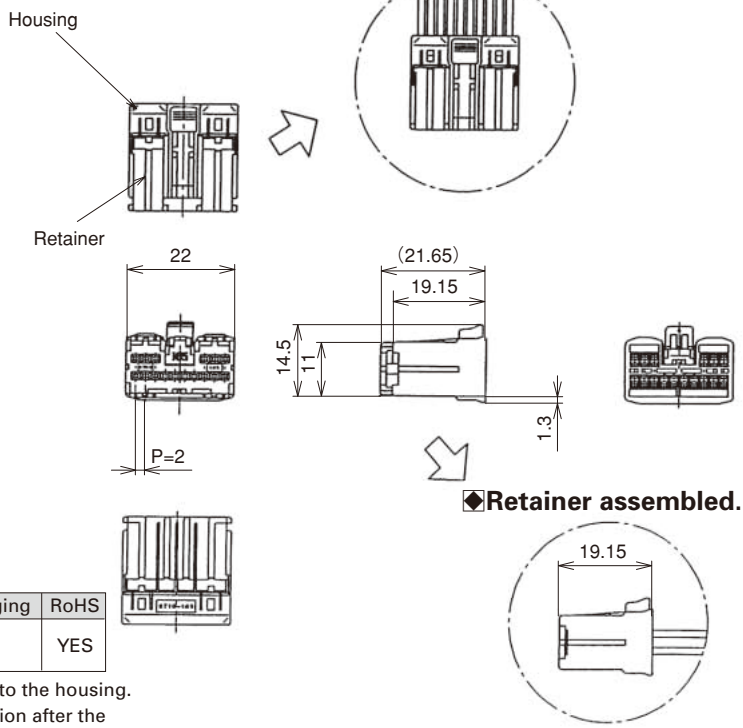

Part No.	HRS No.	Material/Plating or Color	Packaging	RoHS
GT10-16DS-HU	760-0002-7	Housing : PBT / Light Gray Retainer : PBT / Dark Gray	1	YES

Note: This product has the retainer provisionally mounted to the housing. To use, fully mount the retainer at the specified position after the terminals have been inserted.

May.1.2024 Copyright 2024 HIROSE ELECTRIC CO., LTD. All Rights Reserved.

May.1.2024 Copyright 2024 HIROSE ELECTRIC CO., LTD. All Rights Reserved.

GT10S Series with cover case

● Housing

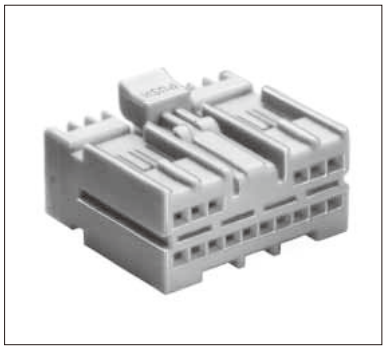

◆View with Cover Attached

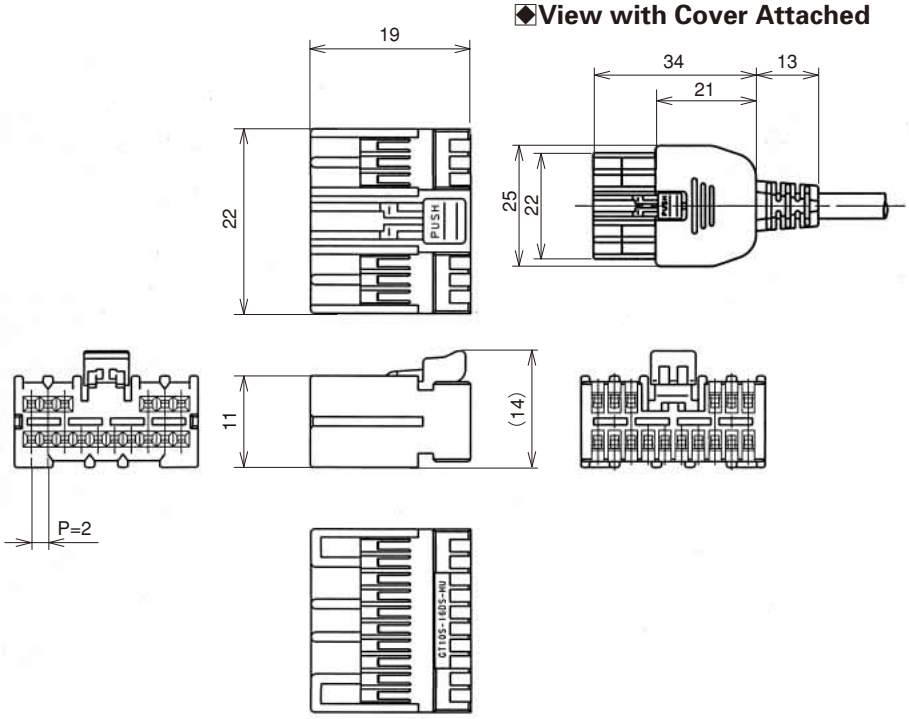

Part No.	HRS No.	Color	Material	Packaging	RoHS
GT10S-16DS-HU	760-0007-0	Light Gray	PBT	1	YES

Note: This product should be used with the cover attached to the housing.

● Cover



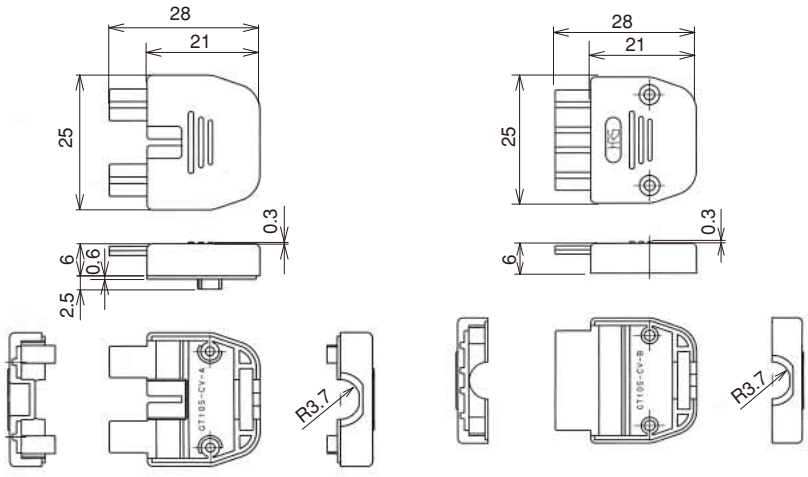

Cover A **Cover B**

Part No.	HRS No.	Color	Material	Packaging	RoHS
GT10S-16DS-CV	760-0008-3	Black	PC	1	YES

Note 1 : This product can be used with cables having outside diameters of 4, 4.8, and 5.2 mm.
Please use as a set in conjunction with clamp fittings and bushings that suit the cable.
Note 2 : This product is sold as a set with cover A, B, and screws.

● Clamp Fittings

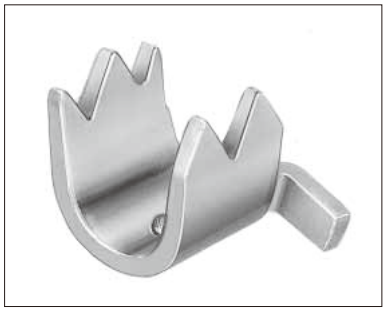

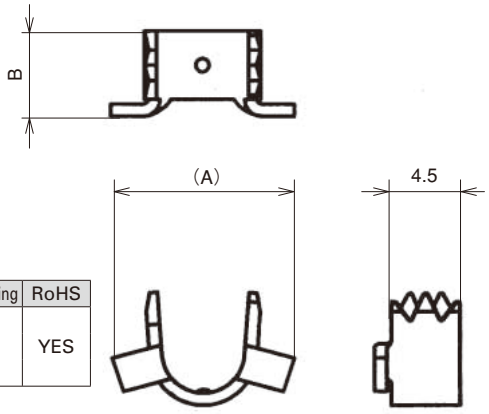

Part No.	HRS No	Material	A Dimension	B Dimension	Outer diameter of the cable	Packaging	RoHS
MQ138-CM (4.0)	206-0891-7	Brass	9	5.5	ϕ4.0	1	YES
MQ138-CM (4.8)	206-0684-2		11.3	5.6	ϕ4.8		
MQ138-CM (5.2)	206-0664-5		12	5.6	ϕ5.2		

● Bushings



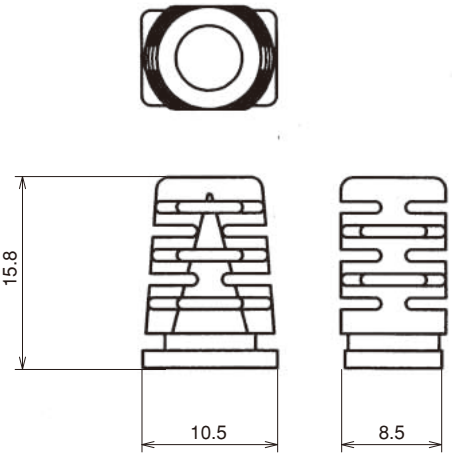

Part No.	HRS No.	Color	Material	Outer diameter of the cable	Packaging	RoHS
MQ138-BS (4.0) (01)	206-0890-4 01	Black	PCV	ϕ4.0	1	YES
MQ138-BS (4.8) (01)	206-0683-0 01			ϕ4.8		
MQ138-BS (5.2) (01)	206-0662-0 01			ϕ5.2		

May.1.2024 Copyright 2024 HIROSE ELECTRIC CO., LTD. All Rights Reserved.

May.1.2024 Copyright 2024 HIROSE ELECTRIC CO., LTD. All Rights Reserved.

■ M Connectors

● Terminal



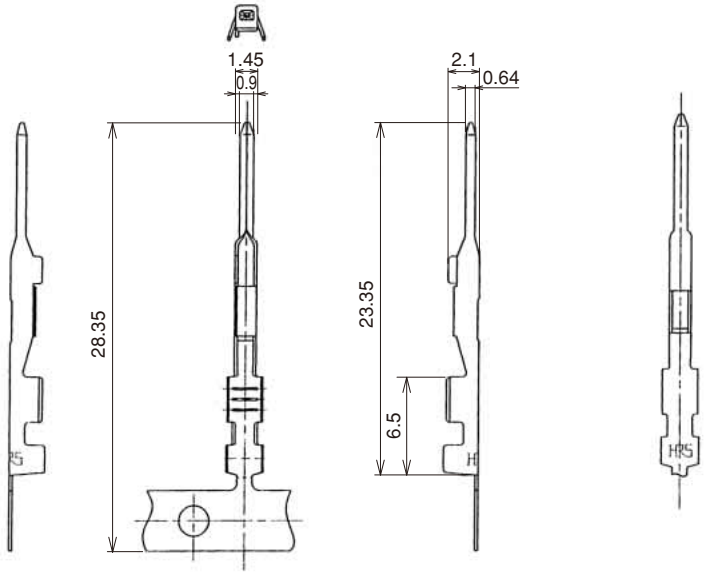

Part No.	HRS No.	Material	Plating	Conductor Size (AWG)	Outer Diameter	Packaging	RoHS
GT10-2022PCF	760-0006-8	Brass	Tin plating	20 to 22 AWG	ϕ 1.1 to 1.3	10,000 pcs/reel	YES

● Housing

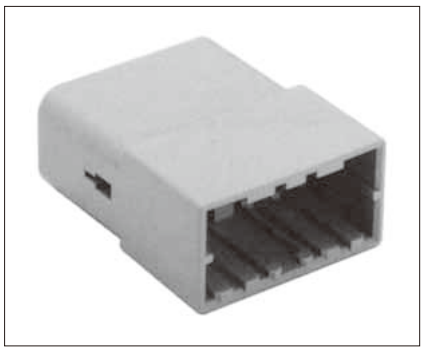

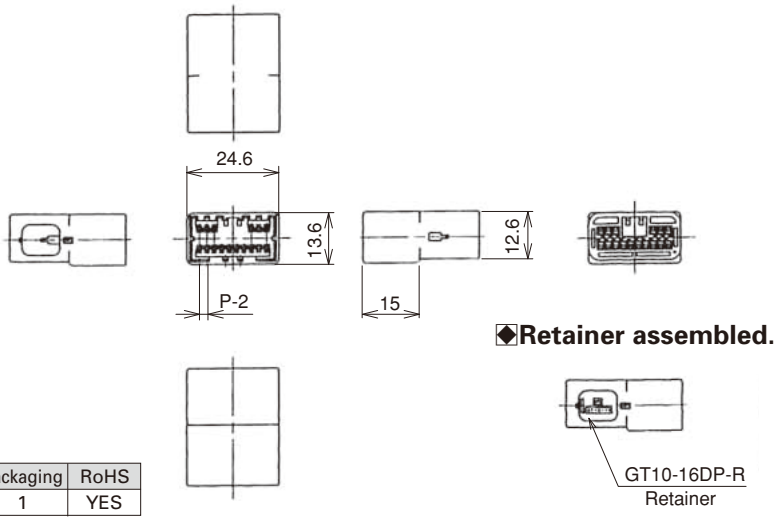

◆Retainer assembled.

Part No.	HRS No.	Color	Material	Packaging	RoHS
GT10-16DP-HU	760-0004-2	Light Gray	PBT	1	YES

Note: This product has a retainer provisionally attached to the housing.
At time of use, install the retainer all the way to the specified position after the terminal has been inserted.

● Retainer (Only for GT10-16DP-HU)

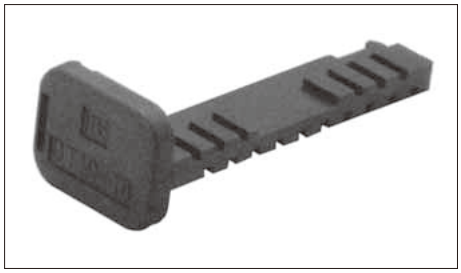

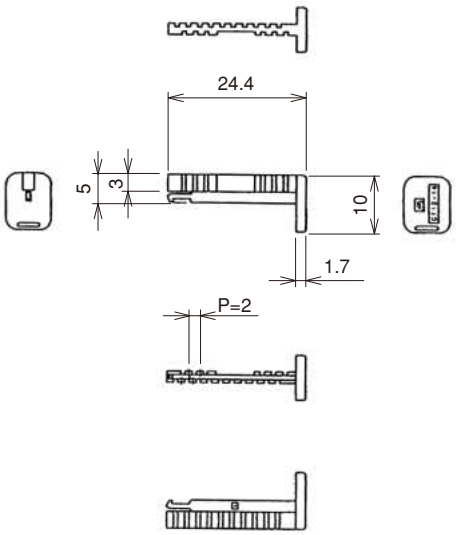

Part No.	HRS No.	Color	Material	Packaging	RoHS
GT10-16DP-R	760-0005-5	Dark Gray	PBT	1	YES

● Board Type

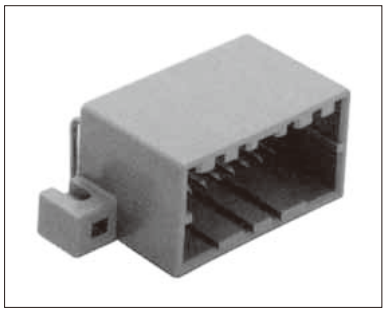

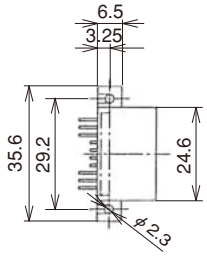

◆Recommended PCB pattern

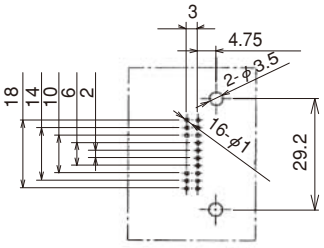

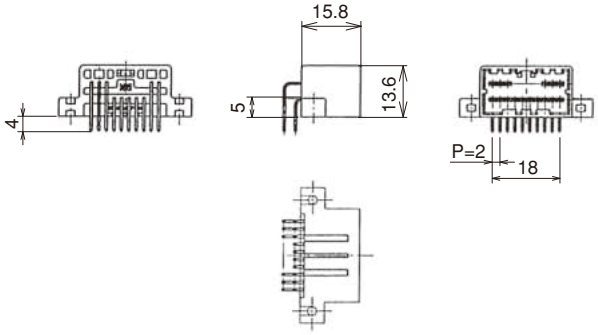

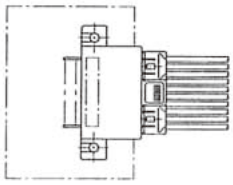

◆Mated condition

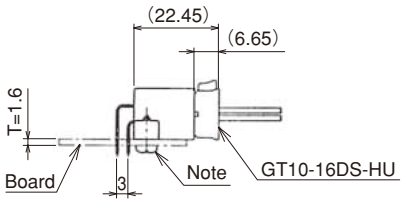

Part No.	HRS No.	Material/Plating or Color	Packaging	RoHS
GT10-16DP-DS(70)	760-0001-4 70	Housing : PBT ／ Light Gray Terminal : Brass ／ Tin plating	1	YES

Note : Use class 4 JIS B 1115 and 1122 mounting screws and diameter 3. length 6 (for a board thickness of 1.6mm).

◆ Crimping tools

User manuals are available. Please contact your Hirose Electric account representative.

● Automatic Crimping Machine

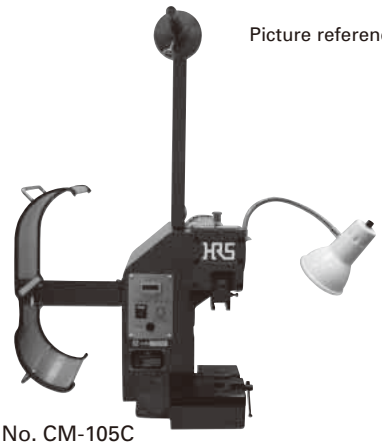

Picture reference only

Part No. CM-105C

Specifications

Item	Specification	Remarks
Press capacity	1.5tons	—
Stroke Length	30mm	—
Number of strokes	200spm (50Hz)	240spm (60Hz)
Weight	75kg	—
Motor	0.2kw	AC100V
Crimping speed	2,000 to 4,000 pcs/hour	—

● Harness tool

Terminal Part No.	Terminal HRS No.	Tool Part No.	Tool HRS No.
GT10-2022SCF	760-0003-0	AP105-GT10-2022S	901-5016-8
GT10-2022PCF	760-0006-8	AP105-GT10-2022P	901-5049-7
GT10-2428SCF	765-0009-6	AP105-GT10-2428S	901-5063-4

May.1.2024 Copyright 2024 HIROSE ELECTRIC CO., LTD. All Rights Reserved.