

74AVCH16T245

16-bit dual supply translating transceiver with configurable voltage translation; 3-state

Rev. 7 — 26 April 2024 Product data sheet

1. General description

The 74AVCH16T245 is a 16-bit transceiver with bidirectional level voltage translation and 3-state outputs. The device can be used as two 8-bit transceivers or as a 16-bit transceiver. It has dual supplies ($V_{CC(A)}$ and $V_{CC(B)}$) for voltage translation and four 8-bit input-output ports (nAn, nBn) each with its own output enable ($n\overline{OE}$) and send/receive (nDIR) input for direction control. $V_{CC(A)}$ and $V_{CC(B)}$ can be independently supplied at any voltage between 0.8 V and 3.6 V making the device suitable for low voltage translation between any of the following voltages: 0.8 V, 1.2 V, 1.5 V, 1.8 V, 2.5 V and 3.3 V. A HIGH on nDIR selects transmission from nAn to nBn while a LOW on nDIR selects transmission from nBn to nAn. A HIGH on $n\overline{OE}$ causes the outputs to assume a high-impedance OFF-state

The device is fully specified for partial power-down applications using I_{OFF}. The I_{OFF} circuitry disables the output, preventing any damaging backflow current through the device when it is powered down. In suspend mode when either $V_{CC(A)}$ or $V_{CC(B)}$ are at GND level, both A and B outputs are in the high-impedance OFF-state. The bus-hold circuitry on the powered-up side always stays active.

The 74AVCH16T245 has active bus hold circuitry which is provided to hold unused or floating data inputs at a valid logic level. This feature eliminates the need for external pull-up or pull-down resistors.

2. Features and benefits

- Wide supply voltage range: $V_{CC(A)}$: 0.8 V to 3.6 V and $V_{CC(B)}$: 0.8 V to 3.6 V
- Complies with JEDEC standards:
  - JESD8-12 (0.8 V to 1.3 V)
  - JESD8-11 (0.9 V to 1.65 V)
  - JESD8-7 (1.2 V to 1.95 V)
  - JESD8-5 (1.8 V to 2.7 V)
  - JESD8-B (2.7 V to 3.6 V)
- Maximum data rates:
  - 380 Mbit/s (≥ 1.8 V to 3.3 V translation)
  - 200 Mbit/s (≥ 1.1 V to 3.3 V translation)
  - 200 Mbit/s (≥ 1.1 V to 2.5 V translation)
  - 200 Mbit/s (≥ 1.1 V to 1.8 V translation)
  - 150 Mbit/s (≥ 1.1 V to 1.5 V translation)
  - 100 Mbit/s (≥ 1.1 V to 1.2 V translation)
- Suspend mode
- Bus hold on data inputs
- Latch-up performance exceeds 100 mA per JESD 78 Class II
- Inputs accept voltages up to 3.6 V
- I_{OFF} circuitry provides partial Power-down mode operation
- ESD protection:
  - HBM JESD22-A114F Class 3B exceeds 8000 V
  - MM JESD22-A115-A exceeds 200 V
  - CDM JESD22-C101D exceeds 1000 V
- Specified from -40 °C to +85 °C and -40 °C to +125 °C

nexperia

3. Ordering information

Table 1. Ordering information

Type number	Package			
	Temperature range	Name	Description	Version
74AVCH16T245DGG	-40 °C to +125 °C	TSSOP48	plastic thin shrink small outline package; 48 leads; body width 6.1 mm	SOT362-1

4. Functional diagram

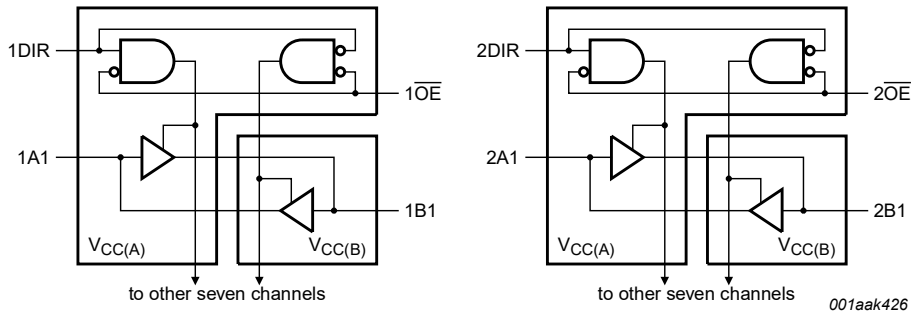

Fig. 1. Logic diagram

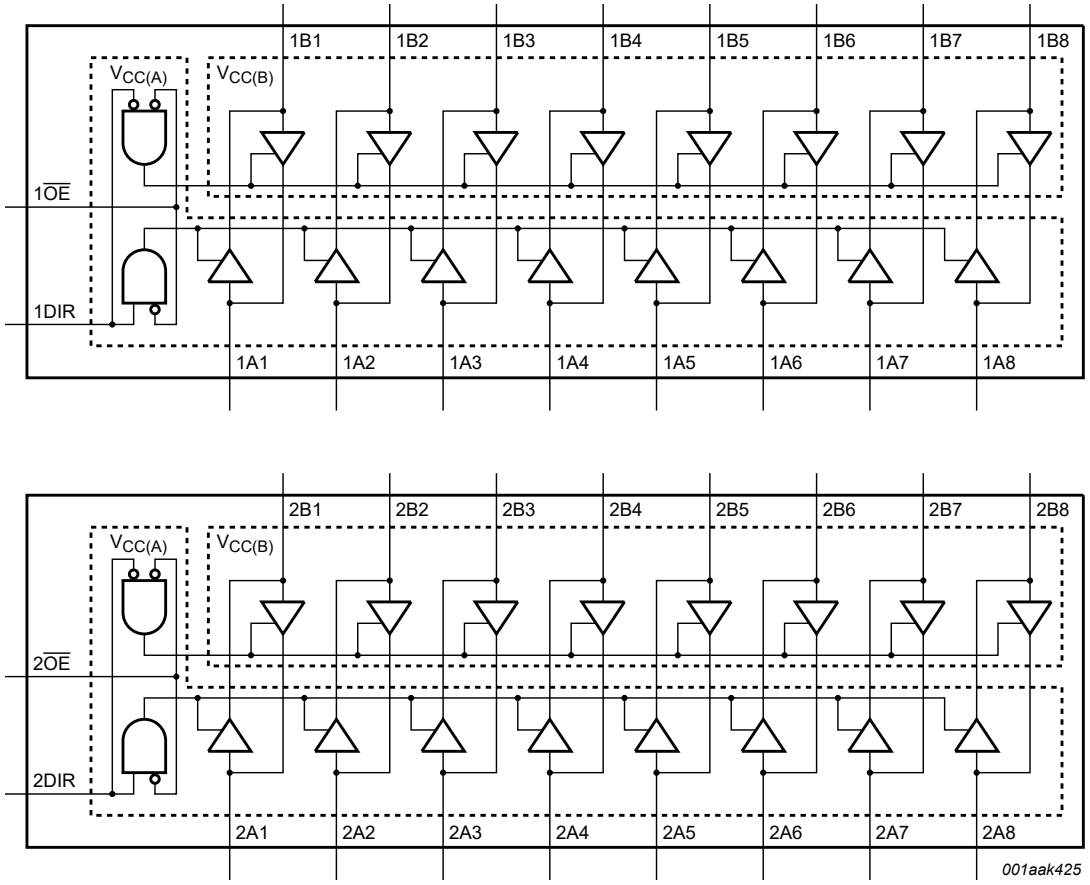

Fig. 2. Logic symbol

All information provided in this document is subject to legal disclaimers.

© Nexperia B.V. 2024. All rights reserved

5. Pinning information

5.1. Pinning

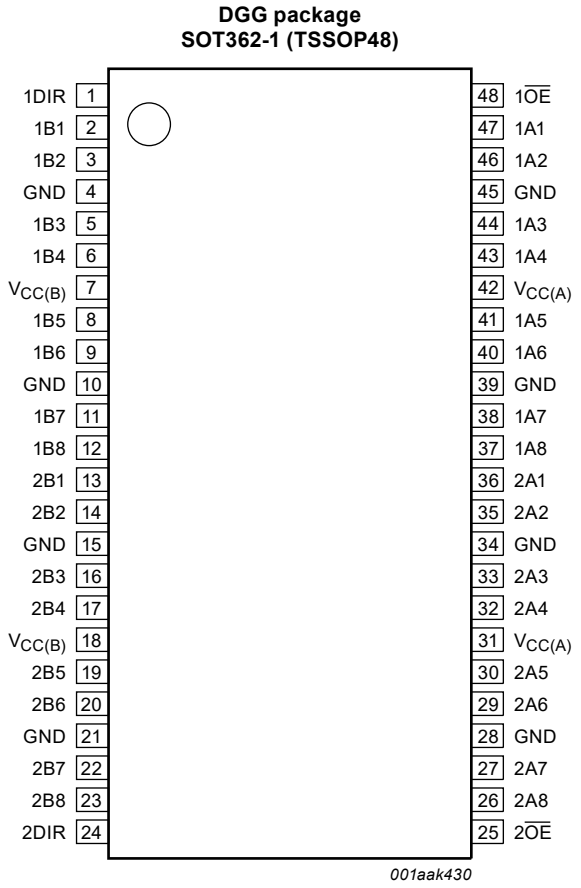

5.2. Pin description

Table 2. Pin description

Symbol	Pin	Description
1DIR, 2DIR	1, 24	direction control (referenced to $V_{CC(A)}$)
1B1, 1B2, 1B3, 1B4, 1B5, 1B6, 1B7, 1B8	2, 3, 5, 6, 8, 9, 11, 12	data input or output (referenced to $V_{CC(B)}$)
2B1, 2B2, 2B3, 2B4, 2B5, 2B6, 2B7, 2B8	13, 14, 16, 17, 19, 20, 22, 23	data input or output (referenced to $V_{CC(B)}$)
GND [1]	4, 10, 15, 21, 28, 34, 39, 45	ground (0 V)
$V_{CC(B)}$	7, 18	supply voltage B
$1\overline{OE}$, $2\overline{OE}$	48, 25	output enable input (active LOW) (referenced to $V_{CC(A)}$)
1A1, 1A2, 1A3, 1A4, 1A5, 1A6, 1A7, 1A8	47, 46, 44, 43, 41, 40, 38, 37	data input or output (referenced to $V_{CC(A)}$)
2A1, 2A2, 2A3, 2A4, 2A5, 2A6, 2A7, 2A8	36, 35, 33, 32, 30, 29, 27, 26	data input or output (referenced to $V_{CC(A)}$)
$V_{CC(A)}$	31, 42	supply voltage A

[1] All GND pins must be connected to ground (0 V).

All information provided in this document is subject to legal disclaimers.
© Nexperia B.V. 2024. All rights reserved

6. Functional description

Table 3. Function table

H = HIGH voltage level; L = LOW voltage level; X = don't care; Z = high-impedance OFF-state.

Supply voltage	Input		Input/output [1]	
$V_{CC(A)}$, $V_{CC(B)}$	$n\overline{OE}$ [2]	nDIR [2]	nAn [2]	nBn [2]
0.8 V to 3.6 V	L	L	nAn = nBn	input
0.8 V to 3.6 V	L	H	input	nBn = nAn
0.8 V to 3.6 V	H	X	Z	Z
GND [1]	X	X	Z	Z

[1] If at least one of $V_{CC(A)}$ or $V_{CC(B)}$ is at GND level, the device goes into suspend mode.
[2] The nAn, nDIR and $n\overline{OE}$ input circuit is referenced to $V_{CC(A)}$; The nBn input circuit is referenced to $V_{CC(B)}$.

7. Limiting values

Table 4. Limiting values

In accordance with the Absolute Maximum Rating System (IEC 60134). Voltages are referenced to GND (ground = 0 V).

Symbol	Parameter	Conditions	Min	Max	Unit
$V_{CC(A)}$	supply voltage A		-0.5	+4.6	V
$V_{CC(B)}$	supply voltage B		-0.5	+4.6	V
I_{IK}	input clamping current	V_I < 0 V	-50	-	mA
V_I	input voltage	[1]	-0.5	+4.6	V
I_{OK}	output clamping current	V_O < 0 V	-50	-	mA
V_O	output voltage	Active mode [1] [2] [3]	-0.5	V_{CCO} + 0.5	V
		Suspend or 3-state mode [1]	-0.5	+4.6	V
I_O	output current	V_O = 0 V to V_{CC} [2]	-	±50	mA
I_{CC}	supply current	$I_{CC(A)}$ or $I_{CC(B)}$	-	100	mA
I_{GND}	ground current		-100	-	mA
T_{stg}	storage temperature		-65	+150	°C
P_{tot}	total power dissipation	T_{amb} = -40 °C to +125 °C; [4]	-	500	mW

[1] The minimum input voltage ratings and output voltage ratings may be exceeded if the input and output current ratings are observed.
[2] V_{CCO} is the supply voltage associated with the output port.
[3] V_{CCO} + 0.5 V should not exceed 4.6 V.
[4] For SOT362-1 (TSSOP48) packages: P_{tot} derates linearly with 12.2 mW/K above 109 °C.

All information provided in this document is subject to legal disclaimers.

© Nexperia B.V. 2024. All rights reserved

8. Recommended operating conditions

Table 5. Recommended operating conditions

Symbol	Parameter	Conditions	Min	Max	Unit
$V_{CC(A)}$	supply voltage A		0.8	3.6	V
$V_{CC(B)}$	supply voltage B		0.8	3.6	V
V_I	input voltage		0	3.6	V
V_O	output voltage	Active mode [1]	0	V_{CCO}	V
		Suspend or 3-state mode	0	3.6	V
T_{amb}	ambient temperature		-40	+125	°C
$\Delta t/\Delta V$	input transition rise and fall rate	V_{CCI} = 0.8 V to 3.6 V [2]	-	5	ns/V

[1] V_{CCO} is the supply voltage associated with the output port.
[2] V_{CCI} is the supply voltage associated with the input port.

9. Static characteristics

Table 6. Typical static characteristics at T_{amb} = 25 °C

At recommended operating conditions; voltages are referenced to GND (ground = 0 V).[1]

Symbol	Parameter	Conditions	Min	Typ	Max	Unit
V_{OH}	HIGH-level output voltage	$V_I = V_{IH}$ or V_{IL}; I_O = -1.5 mA; $V_{CC(A)} = V_{CC(B)}$ = 0.8 V	-	0.69	-	V
V_{OL}	LOW-level output voltage	$V_I = V_{IH}$ or V_{IL}; I_O = 1.5 mA; $V_{CC(A)} = V_{CC(B)}$ = 0.8 V	-	0.07	-	V
I_I	input leakage current	nDIR, n$\overline{OE}$ input; V_I = 0 V or 3.6 V; $V_{CC(A)} = V_{CC(B)}$ = 0.8 V to 3.6 V	-	±0.025	±0.25	µA
I_{BHL}	bus hold LOW current	A or B port; V_I = 0.42 V; $V_{CC(A)} = V_{CC(B)}$ = 1.2 V [2]	-	26	-	µA
I_{BHH}	bus hold HIGH current	A or B port; V_I = 0.78 V; $V_{CC(A)} = V_{CC(B)}$ = 1.2 V [3]	-	-24	-	µA
I_{BHLO}	bus hold LOW overdrive current	A or B port; $V_{CC(A)} = V_{CC(B)}$ = 1.2 V [4]	-	27	-	µA
I_{BHHO}	bus hold HIGH overdrive current	A or B port; $V_{CC(A)} = V_{CC(B)}$ = 1.2 V [5]	-	-26	-	µA
I_{OZ}	OFF-state output current	A or B port; V_O = 0 V or V_{CCO}; $V_{CC(A)} = V_{CC(B)}$ = 3.6 V [6]	-	±0.5	±2.5	µA
		suspend mode A port; V_O = 0 V or V_{CCO}; $V_{CC(A)}$ = 3.6 V; $V_{CC(B)}$ = 0 V [6]	-	±0.5	±2.5	µA
		suspend mode B port; V_O = 0 V or V_{CCO}; $V_{CC(A)}$ = 0 V; $V_{CC(B)}$ = 3.6 V [6]	-	±0.5	±2.5	µA
I_{OFF}	power-off leakage current	A port; V_I or V_O = 0 V to 3.6 V; $V_{CC(A)}$ = 0 V; $V_{CC(B)}$ = 0.8 V to 3.6 V	-	±0.1	±1	µA
		B port; V_I or V_O = 0 V to 3.6 V; $V_{CC(B)}$ = 0 V; $V_{CC(A)}$ = 0.8 V to 3.6 V	-	±0.1	±1	µA
C_I	input capacitance	nDIR, n$\overline{OE}$ input; V_I = 0 V or 3.3 V; $V_{CC(A)} = V_{CC(B)}$ = 3.3 V	-	2.0	-	pF
$C_{I/O}$	input/output capacitance	A and B port; V_O = 3.3 V or 0 V; $V_{CC(A)} = V_{CC(B)}$ = 3.3 V	-	4.5	-	pF

[1] V_{CCO} is the supply voltage associated with the output port.
[2] The bus hold circuit can sink at least the minimum low sustaining current at V_{IL} max. I_{BHL} should be measured after lowering V_I to GND and then raising it to V_{IL} max.
[3] The bus hold circuit can source at least the minimum high sustaining current at V_{IH} min. I_{BHH} should be measured after raising V_I to V_{CC} and then lowering it to V_{IH} min.
[4] An external driver must source at least I_{BHLO} to switch this node from LOW to HIGH.
[5] An external driver must sink at least I_{BHHO} to switch this node from HIGH to LOW.
[6] For I/O ports, the parameter I_{OZ} includes the input leakage current.

All information provided in this document is subject to legal disclaimers.
© Nexperia B.V. 2024. All rights reserved

Table 7. Static characteristics

At recommended operating conditions; voltages are referenced to GND (ground = 0 V). [1] [2]

Symbol	Parameter	Conditions	-40 °C to +85 °C		-40 °C to +125 °C		Unit
			Min	Max	Min	Max	
V_{IH}	HIGH-level input voltage	data input					
		V_{CCI} = 0.8 V	$0.70V_{CCI}$	-	$0.70V_{CCI}$	-	V
		V_{CCI} = 1.1 V to 1.95 V	$0.65V_{CCI}$	-	$0.65V_{CCI}$	-	V
		V_{CCI} = 2.3 V to 2.7 V	1.6	-	1.6	-	V
		V_{CCI} = 3.0 V to 3.6 V	2	-	2	-	V
		nDIR, n$\overline{OE}$ input					
		$V_{CC(A)}$ = 0.8 V	$0.70V_{CC(A)}$	-	$0.70V_{CC(A)}$	-	V
		$V_{CC(A)}$ = 1.1 V to 1.95 V	$0.65V_{CC(A)}$	-	$0.65V_{CC(A)}$	-	V
		$V_{CC(A)}$ = 2.3 V to 2.7 V	1.6	-	1.6	-	V
		$V_{CC(A)}$ = 3.0 V to 3.6 V	2	-	2	-	V
V_{IL}	LOW-level input voltage	data input					
		V_{CCI} = 0.8 V	-	$0.30V_{CCI}$	-	$0.30V_{CCI}$	V
		V_{CCI} = 1.1 V to 1.95 V	-	$0.35V_{CCI}$	-	$0.35V_{CCI}$	V
		V_{CCI} = 2.3 V to 2.7 V	-	0.7	-	0.7	V
		V_{CCI} = 3.0 V to 3.6 V	-	0.8	-	0.8	V
		nDIR, n$\overline{OE}$ input					
		$V_{CC(A)}$ = 0.8 V	-	$0.30V_{CC(A)}$	-	$0.30V_{CC(A)}$	V
		$V_{CC(A)}$ = 1.1 V to 1.95 V	-	$0.35V_{CC(A)}$	-	$0.35V_{CC(A)}$	V
		$V_{CC(A)}$ = 2.3 V to 2.7 V	-	0.7	-	0.7	V
		$V_{CC(A)}$ = 3.0 V to 3.6 V	-	0.8	-	0.8	V
V_{OH}	HIGH-level output voltage	V_I = V_{IH} or V_{IL}					
		I_O = -100 µA; $V_{CC(A)}$ = $V_{CC(B)}$ = 0.8 V to 3.6 V	V_{CCO} - 0.1	-	V_{CCO} - 0.1	-	V
		I_O = -3 mA; $V_{CC(A)}$ = $V_{CC(B)}$ = = 1.1 V	0.85	-	0.85	-	V
		I_O = -6 mA;$V_{CC(A)}$ = $V_{CC(B)}$ = 1.4 V	1.05	-	1.05	-	V
		I_O = -8 mA; $V_{CC(A)}$ = $V_{CC(B)}$ = 1.65 V	1.2	-	1.2	-	V
		I_O = -9 mA; $V_{CC(A)}$ = $V_{CC(B)}$ = 2.3 V	1.75	-	1.75	-	V
		I_O = -12 mA; $V_{CC(A)}$ = $V_{CC(B)}$ = 3.0 V	2.3	-	2.3	-	V
V_{OL}	LOW-level output voltage	V_I = V_{IH} or V_{IL}					
		I_O = 100 µA; $V_{CC(A)}$ = $V_{CC(B)}$ = 0.8 V to 3.6 V	-	0.1	-	0.1	V
		I_O = 3 mA; $V_{CC(A)}$ = $V_{CC(B)}$ = 1.1 V	-	0.25	-	0.25	V
		I_O = 6 mA; $V_{CC(A)}$ = $V_{CC(B)}$ = 1.4 V	-	0.35	-	0.35	V
		I_O = 8 mA; $V_{CC(A)}$ = $V_{CC(B)}$ = 1.65 V	-	0.45	-	0.45	V
		I_O = 9 mA; $V_{CC(A)}$ = $V_{CC(B)}$ = 2.3 V	-	0.55	-	0.55	V
		I_O = 12 mA; $V_{CC(A)}$ = $V_{CC(B)}$ = 3.0 V	-	0.7	-	0.7	V
I_I	input leakage current	nDIR, n$\overline{OE}$ input; V_I = 0 V or 3.6 V; $V_{CC(A)}$ = $V_{CC(B)}$ = 0.8 V to 3.6 V	-	±1	-	±5	µA

All information provided in this document is subject to legal disclaimers.

© Nexperia B.V. 2024. All rights reserved

Symbol	Parameter	Conditions	-40 °C to +85 °C		-40 °C to +125 °C		Unit
			Min	Max	Min	Max	
I_{BHL}	bus hold LOW current	A or B port [3]					
		V_I = 0.49 V; $V_{CC(A)}$ = $V_{CC(B)}$ = 1.4 V	15	-	15	-	µA
		V_I = 0.58 V; $V_{CC(A)}$ = $V_{CC(B)}$ = 1.65 V	25	-	25	-	µA
		V_I = 0.70 V; $V_{CC(A)}$ = $V_{CC(B)}$ = 2.3 V	45	-	45	-	µA
		V_I = 0.80 V; $V_{CC(A)}$ = $V_{CC(B)}$ = 3.0 V	100	-	90	-	µA
I_{BHH}	bus hold HIGH current	A or B port [4]					
		V_I = 0.91 V; $V_{CC(A)}$ = $V_{CC(B)}$ = 1.4 V	-15	-	-15	-	µA
		V_I = 1.07 V; $V_{CC(A)}$ = $V_{CC(B)}$ = 1.65 V	-25	-	-25	-	µA
		V_I = 1.60 V; $V_{CC(A)}$ = $V_{CC(B)}$ = 2.3 V	-45	-	-45	-	µA
		V_I = 2.00 V; $V_{CC(A)}$ = $V_{CC(B)}$ = 3.0 V	-100	-	-100	-	µA
I_{BHLO}	bus hold LOW overdrive current	A or B port [5]					
		$V_{CC(A)}$ = $V_{CC(B)}$ = 1.6 V	125	-	125	-	µA
		$V_{CC(A)}$ = $V_{CC(B)}$ = 1.95 V	200	-	200	-	µA
		$V_{CC(A)}$ = $V_{CC(B)}$ = 2.7 V	300	-	300	-	µA
		$V_{CC(A)}$ = $V_{CC(B)}$ = 3.6 V	500	-	500	-	µA
I_{BHHO}	bus hold HIGH overdrive current	A or B port [6]					
		$V_{CC(A)}$ = $V_{CC(B)}$ = 1.6 V	-125	-	-125	-	µA
		$V_{CC(A)}$ = $V_{CC(B)}$ = 1.95 V	-200	-	-200	-	µA
		$V_{CC(A)}$ = $V_{CC(B)}$ = 2.7 V	-300	-	-300	-	µA
		$V_{CC(A)}$ = $V_{CC(B)}$ = 3.6 V	-500	-	-500	-	µA
I_{OZ}	OFF-state output current	A or B port; V_O = 0 V or V_{CCO}; $V_{CC(A)}$ = $V_{CC(B)}$ = 3.6 V [7]	-	±5	-	±30	µA
		suspend mode A port; V_O = 0 V or V_{CCO}; $V_{CC(A)}$ = 3.6 V; $V_{CC(B)}$ = 0 V [7]	-	±5	-	±30	µA
		suspend mode B port; V_O = 0 V or V_{CCO}; $V_{CC(A)}$ = 0 V; $V_{CC(B)}$ = 3.6 V [7]	-	±5	-	±30	µA
I_{OFF}	power-off leakage current	A port; V_I or V_O = 0 V to 3.6 V; $V_{CC(A)}$ = 0 V; $V_{CC(B)}$ = 0.8 V to 3.6 V	-	±5	-	±30	µA
		B port; V_I or V_O = 0 V to 3.6 V; $V_{CC(B)}$ = 0 V; $V_{CC(A)}$ = 0.8 V to 3.6 V	-	±5	-	±30	µA

All information provided in this document is subject to legal disclaimers.

© Nexperia B.V. 2024. All rights reserved

Symbol	Parameter	Conditions	-40 °C to +85 °C		-40 °C to +125 °C		Unit
			Min	Max	Min	Max	
I_{CC}	supply current	A port; V_I = 0 V or V_{CCI}; I_O = 0 A					
		$V_{CC(A)}$ = 0.8 V to 3.6 V; $V_{CC(B)}$ = 0.8 V to 3.6 V	-	30	-	125	µA
		$V_{CC(A)}$ = 1.1 V to 3.6 V; $V_{CC(B)}$ = 1.1 V to 3.6 V	-	25	-	100	µA
		$V_{CC(A)}$ = 3.6 V; $V_{CC(B)}$ = 0 V	-	25	-	100	µA
		$V_{CC(A)}$ = 0 V; $V_{CC(B)}$ = 3.6 V	-5	-	-20	-	µA
		B port; V_I = 0 V or V_{CCI}; I_O = 0 A					
		$V_{CC(A)}$ = 0.8 V to 3.6 V; $V_{CC(B)}$ = 0.8 V to 3.6 V	-	30	-	125	µA
		$V_{CC(A)}$ = 1.1 V to 3.6 V; $V_{CC(B)}$ = 1.1 V to 3.6 V	-	25	-	100	µA
		$V_{CC(A)}$ = 3.6 V; $V_{CC(B)}$ = 0 V	-5	-	-20	-	µA
		$V_{CC(A)}$ = 0 V; $V_{CC(B)}$ = 3.6 V	-	25	-	100	µA
		A plus B port ($I_{CC(A)}$ + $I_{CC(B)}$); I_O = 0 A; V_I = 0 V or V_{CCI}; $V_{CC(A)}$ = 0.8 V to 3.6 V; $V_{CC(B)}$ = 0.8 V to 3.6 V	-	55	-	185	µA
		A plus B port ($I_{CC(A)}$ + $I_{CC(B)}$); I_O = 0 A; V_I = 0 V or V_{CCI}; $V_{CC(A)}$ = 1.1 V to 3.6 V; $V_{CC(B)}$ = 1.1 V to 3.6 V	-	45	-	150	µA

[1] V_{CCO} is the supply voltage associated with the output port.
[2] V_{CCI} is the supply voltage associated with the data input port.
[3] The bus hold circuit can sink at least the minimum low sustaining current at V_{IL} max. I_{BHL} should be measured after lowering V_I to GND and then raising it to V_{IL} max.
[4] The bus hold circuit can source at least the minimum high sustaining current at V_{IH} min. I_{BHH} should be measured after raising V_I to V_{CC} and then lowering it to V_{IH} min.
[5] An external driver must source at least I_{BHLO} to switch this node from LOW to HIGH.
[6] An external driver must sink at least I_{BHHO} to switch this node from HIGH to LOW.
[7] For I/O ports, the parameter I_{OZ} includes the input leakage current.

Table 8. Typical total supply current ($I_{CC(A)}$ + $I_{CC(B)}$)

$V_{CC(A)}$	$V_{CC(B)}$							Unit
	0 V	0.8 V	1.2 V	1.5 V	1.8 V	2.5 V	3.3 V	
0 V	0	0.1	0.1	0.1	0.1	0.1	0.1	µA
0.8 V	0.1	0.1	0.1	0.1	0.1	0.3	1.6	µA
1.2 V	0.1	0.1	0.1	0.1	0.1	0.1	0.8	µA
1.5 V	0.1	0.1	0.1	0.1	0.1	0.1	0.4	µA
1.8 V	0.1	0.1	0.1	0.1	0.1	0.1	0.2	µA
2.5 V	0.1	0.3	0.1	0.1	0.1	0.1	0.1	µA
3.3 V	0.1	1.6	0.8	0.4	0.2	0.1	0.1	µA

All information provided in this document is subject to legal disclaimers.
© Nexperia B.V. 2024. All rights reserved

10. Dynamic characteristics

Table 9. Typical power dissipation capacitance at $V_{CC(A)} = V_{CC(B)}$ and T_{amb} = 25 °C

Voltages are referenced to GND (ground = 0 V). [1] [2]

Symbol	Parameter	Conditions	$V_{CC(A)} = V_{CC(B)}$						Unit
			0.8 V	1.2 V	1.5 V	1.8 V	2.5 V	3.3 V	
C_{PD}	power dissipation capacitance	A port: (direction nAn to nBn); output enabled	0.2	0.2	0.2	0.2	0.3	0.4	pF
		A port: (direction nAn to nBn); output disabled	0.2	0.2	0.2	0.2	0.3	0.4	pF
		A port: (direction nBn to nAn); output enabled	9	9.7	9.8	10.3	11.7	13.7	pF
		A port: (direction nBn to nAn); output disabled	0.6	0.6	0.6	0.7	0.7	0.7	pF
		B port: (direction nAn to nBn); output enabled	9	9.7	9.8	10.3	11.7	13.7	pF
		B port: (direction nAn to nBn); output disabled	0.6	0.6	0.6	0.7	0.7	0.7	pF
		B port: (direction nBn to nAn); output enabled	0.2	0.2	0.2	0.2	0.3	0.4	pF
		B port: (direction nBn to nAn); output disabled	0.2	0.2	0.2	0.2	0.3	0.4	pF

[1] C_{PD} is used to determine the dynamic power dissipation (P_D in µW).
$P_D = C_{PD} \times V_{CC}{}^2 \times f_i \times N + \Sigma(C_L \times V_{CC}{}^2 \times f_o)$ where:
f_i = input frequency in MHz;
f_o = output frequency in MHz;
C_L = load capacitance in pF;
V_{CC} = supply voltage in V;
N = number of inputs switching;
$\Sigma(C_L \times V_{CC}{}^2 \times f_o)$ = sum of the outputs.

[2] f_i = 10 MHz; V_I = GND to V_{CC}; $t_r = t_f$ = 1 ns; C_L = 0 pF; $R_L = \infty$ Ω.

Table 10. Typical dynamic characteristics at $V_{CC(A)}$ = 0.8 V and T_{amb} = 25 °C

Voltages are referenced to GND (ground = 0 V); for test circuit see Fig. 5; for waveforms see Fig. 3 and Fig. 4. [1]

Symbol	Parameter	Conditions	$V_{CC(B)}$						Unit
			0.8 V	1.2 V	1.5 V	1.8 V	2.5 V	3.3 V	
t_{pd}	propagation delay	nAn to nBn	14.4	7.0	6.2	6.0	5.9	6.0	ns
		nBn to nAn	14.4	12.4	12.1	11.9	11.8	11.8	ns
t_{dis}	disable time	n$\overline{OE}$ to nAn	16.2	16.2	16.2	16.2	16.2	16.2	ns
		n$\overline{OE}$ to nBn	17.6	10.0	9.0	9.1	8.7	9.3	ns
t_{en}	enable time	n$\overline{OE}$ to nAn	21.9	21.9	21.9	21.9	21.9	21.9	ns
		n$\overline{OE}$ to nBn	22.2	11.1	9.8	9.4	9.4	9.6	ns

[1] t_{pd} is the same as t_{PLH} and t_{PHL}; t_{dis} is the same as t_{PLZ} and t_{PHZ}; t_{en} is the same as t_{PZL} and t_{PZH}.

Table 11. Typical dynamic characteristics at $V_{CC(B)}$ = 0.8 V and T_{amb} = 25 °C

Voltages are referenced to GND (ground = 0 V); for test circuit see Fig. 5; for waveforms see Fig. 3 and Fig. 4. [1]

Symbol	Parameter	Conditions	$V_{CC(A)}$						Unit
			0.8 V	1.2 V	1.5 V	1.8 V	2.5 V	3.3 V	
t_{pd}	propagation delay	nAn to nBn	14.4	12.4	12.1	11.9	11.8	11.8	ns
		nBn to nAn	14.4	7.0	6.2	6.0	5.9	6.0	ns
t_{dis}	disable time	n$\overline{OE}$ to nAn	16.2	5.9	4.4	4.2	3.1	3.5	ns
		n$\overline{OE}$ to nBn	17.6	14.2	13.7	13.6	13.3	13.1	ns
t_{en}	enable time	n$\overline{OE}$ to nAn	21.9	6.4	4.4	3.5	2.6	2.3	ns
		n$\overline{OE}$ to nBn	22.2	17.7	17.2	17.0	16.8	16.7	ns

[1] t_{pd} is the same as t_{PLH} and t_{PHL}; t_{dis} is the same as t_{PLZ} and t_{PHZ}; t_{en} is the same as t_{PZL} and t_{PZH}.

All information provided in this document is subject to legal disclaimers.

© Nexperia B.V. 2024. All rights reserved

Table 12. Dynamic characteristics for temperature range -40 °C to +85 °C

Voltages are referenced to GND (ground = 0 V); for test circuit see Fig. 5; for waveforms see Fig. 3 and Fig. 4. [1]

Symbol	Parameter	Conditions	$V_{CC(B)}$										Unit
			1.2 V ± 0.1 V		1.5 V ± 0.1 V		1.8 V ± 0.15 V		2.5 V ± 0.2 V		3.3 V ± 0.3 V		
			Min	Max	Min	Max	Min	Max	Min	Max	Min	Max	
$V_{CC(A)}$ = 1.1 V to 1.3 V													
t_{pd}	propagation delay	nAn to nBn	0.5	9.2	0.5	6.9	0.5	6.0	0.5	5.1	0.5	4.9	ns
		nBn to nAn	0.5	9.2	0.5	8.7	0.5	8.5	0.5	8.2	0.5	8.0	ns
t_{dis}	disable time	$n\overline{OE}$ to nAn	1.5	11.6	1.5	11.6	1.5	11.6	1.5	11.6	1.5	11.6	ns
		$n\overline{OE}$ to nBn	1.5	12.5	1.5	9.7	1.5	9.5	1.0	8.1	1.0	8.9	ns
t_{en}	enable time	$n\overline{OE}$ to nAn	1.0	14.5	1.0	14.5	1.0	14.5	1.0	14.5	1.0	14.5	ns
		$n\overline{OE}$ to nBn	1.1	14.9	1.1	11.0	1.1	9.6	1.0	8.1	1.0	7.7	ns
$V_{CC(A)}$ = 1.4 V to 1.6 V													
t_{pd}	propagation delay	nAn to nBn	0.5	8.7	0.5	6.2	0.5	5.2	0.5	4.1	0.5	3.7	ns
		nBn to nAn	0.5	6.9	0.5	6.2	0.5	5.9	0.5	5.6	0.5	5.5	ns
t_{dis}	disable time	$n\overline{OE}$ to nAn	1.5	9.1	1.5	9.1	1.5	9.1	1.5	9.1	1.5	9.1	ns
		$n\overline{OE}$ to nBn	1.5	11.4	1.5	8.7	1.5	7.5	1.0	6.5	1.0	6.3	ns
t_{en}	enable time	$n\overline{OE}$ to nAn	1.0	10.1	1.0	10.1	1.0	10.1	1.0	10.1	1.0	10.1	ns
		$n\overline{OE}$ to nBn	1.0	13.5	1.0	10.1	0.5	8.1	0.5	5.9	0.5	5.2	ns
$V_{CC(A)}$ = 1.65 V to 1.95 V													
t_{pd}	propagation delay	nAn to nBn	0.5	8.5	0.5	5.9	0.5	4.8	0.5	3.7	0.5	3.3	ns
		nBn to nAn	0.5	6.0	0.5	5.2	0.5	4.8	0.5	4.5	0.5	4.4	ns
t_{dis}	disable time	$n\overline{OE}$ to nAn	1.5	7.7	1.5	7.7	1.5	7.7	1.5	7.7	1.5	7.7	ns
		$n\overline{OE}$ to nBn	1.5	11.1	1.5	8.4	1.5	7.1	1.0	5.9	1.0	5.7	ns
t_{en}	enable time	$n\overline{OE}$ to nAn	1.0	7.8	1.0	7.8	1.0	7.8	1.0	7.8	1.0	7.8	ns
		$n\overline{OE}$ to nBn	1.0	13.0	1.0	9.2	0.5	7.4	0.5	5.3	0.5	4.5	ns
$V_{CC(A)}$ = 2.3 V to 2.7 V													
t_{pd}	propagation delay	nAn to nBn	0.5	8.2	0.5	5.6	0.5	4.6	0.5	3.3	0.5	2.8	ns
		nBn to nAn	0.5	5.1	0.5	4.1	0.5	3.7	0.5	3.4	0.5	3.2	ns
t_{dis}	disable time	$n\overline{OE}$ to nAn	1.0	6.1	1.0	6.1	1.0	6.1	1.0	6.1	1.0	6.1	ns
		$n\overline{OE}$ to nBn	1.0	10.6	1.0	7.9	1.0	6.6	1.0	6.1	1.0	5.2	ns
t_{en}	enable time	$n\overline{OE}$ to nAn	0.5	5.3	0.5	5.3	0.5	5.3	0.5	5.3	0.5	5.3	ns
		$n\overline{OE}$ to nBn	0.5	12.5	0.5	9.4	0.5	7.3	0.5	5.1	0.5	4.5	ns
$V_{CC(A)}$ = 3.0 V to 3.6 V													
t_{pd}	propagation delay	nAn to nBn	0.5	8.0	0.5	5.5	0.5	4.4	0.5	3.2	0.5	2.7	ns
		nBn to nAn	0.5	4.9	0.5	3.7	0.5	3.3	0.5	2.9	0.5	2.7	ns
t_{dis}	disable time	$n\overline{OE}$ to nAn	0.5	5.0	0.5	5.0	0.5	5.0	0.5	5.0	0.5	5.0	ns
		$n\overline{OE}$ to nBn	1.0	10.3	1.0	7.7	1.0	6.5	1.0	5.2	0.5	5.0	ns
t_{en}	enable time	$n\overline{OE}$ to nAn	0.5	4.3	0.5	4.3	0.5	4.2	0.5	4.1	0.5	4.0	ns
		$n\overline{OE}$ to nBn	0.5	12.4	0.5	9.3	0.5	7.2	0.5	4.9	0.5	4.0	ns

[1] t_{pd} is the same as t_{PLH} and t_{PHL}; t_{dis} is the same as t_{PLZ} and t_{PHZ}; t_{en} is the same as t_{PZL} and t_{PZH}.

All information provided in this document is subject to legal disclaimers.

© Nexperia B.V. 2024. All rights reserved

Table 13. Dynamic characteristics for temperature range -40 °C to +125 °C

Voltages are referenced to GND (ground = 0 V); for test circuit see Fig. 5; for waveforms see Fig. 3 and Fig. 4. [1]

Symbol	Parameter	Conditions	$V_{CC(B)}$										Unit
			1.2 V ± 0.1 V		1.5 V ± 0.1 V		1.8 V ± 0.15 V		2.5 V ± 0.2 V		3.3 V ± 0.3 V		
			Min	Max	Min	Max	Min	Max	Min	Max	Min	Max	
$V_{CC(A)}$ = 1.1 V to 1.3 V													
t_{pd}	propagation delay	nAn to nBn	0.5	10.2	0.5	7.6	0.5	6.6	0.5	5.7	0.5	5.4	ns
		nBn to nAn	0.5	10.2	0.5	9.6	0.5	9.4	0.5	9.1	0.5	8.8	ns
t_{dis}	disable time	$n\overline{OE}$ to nAn	1.5	12.8	1.5	12.8	1.5	12.8	1.5	12.8	1.5	12.8	ns
		$n\overline{OE}$ to nBn	1.5	13.8	1.5	10.7	1.5	10.5	1.0	9.0	1.5	9.8	ns
t_{en}	enable time	$n\overline{OE}$ to nAn	1.0	16.0	1.0	16.0	1.0	16.0	1.0	16.0	1.0	16.0	ns
		$n\overline{OE}$ to nBn	1.1	16.4	1.1	12.1	1.1	10.6	1.0	9.0	1.0	8.5	ns
$V_{CC(A)}$ = 1.4 V to 1.6 V													
t_{pd}	propagation delay	nAn to nBn	0.5	9.6	0.5	6.9	0.5	5.8	0.5	4.6	0.5	4.1	ns
		nBn to nAn	0.5	7.6	0.5	6.9	0.5	6.5	0.5	6.2	0.5	6.1	ns
t_{dis}	disable time	$n\overline{OE}$ to nAn	1.5	10.1	1.5	10.1	1.5	10.1	1.5	10.1	1.5	10.1	ns
		$n\overline{OE}$ to nBn	1.5	12.6	1.5	9.6	1.5	8.3	1.0	7.2	1.0	7.0	ns
t_{en}	enable time	$n\overline{OE}$ to nAn	1.0	11.2	1.0	11.2	1.0	11.2	1.0	11.2	1.0	11.2	ns
		$n\overline{OE}$ to nBn	1.0	14.9	1.0	11.2	0.5	9.0	0.5	6.5	0.5	5.8	ns
$V_{CC(A)}$ = 1.65 V to 1.95 V													
t_{pd}	propagation delay	nAn to nBn	0.5	9.4	0.5	6.5	0.5	5.3	0.5	4.1	0.5	3.7	ns
		nBn to nAn	0.5	6.6	0.5	5.8	0.5	5.3	0.5	5.0	0.5	4.9	ns
t_{dis}	disable time	$n\overline{OE}$ to nAn	1.5	8.5	1.5	8.5	1.5	8.5	1.5	8.5	1.5	8.5	ns
		$n\overline{OE}$ to nBn	1.5	12.3	1.5	9.3	1.5	7.9	1.0	6.5	1.0	6.3	ns
t_{en}	enable time	$n\overline{OE}$ to nAn	1.0	8.6	1.0	8.6	1.0	8.6	1.0	8.6	1.0	8.6	ns
		$n\overline{OE}$ to nBn	1.0	14.3	1.0	10.2	0.5	8.2	0.5	5.9	0.5	5.0	ns
$V_{CC(A)}$ = 2.3 V to 2.7 V													
t_{pd}	propagation delay	nAn to nBn	0.5	9.1	0.5	6.2	0.5	5.1	0.5	3.7	0.5	3.1	ns
		nBn to nAn	0.5	5.7	0.5	4.6	0.5	4.1	0.5	3.8	0.5	3.6	ns
t_{dis}	disable time	$n\overline{OE}$ to nAn	1.0	6.8	1.0	6.8	1.0	6.8	1.0	6.8	1.0	6.8	ns
		$n\overline{OE}$ to nBn	1.0	11.7	1.0	8.7	1.0	7.3	1.0	6.8	1.0	5.8	ns
t_{en}	enable time	$n\overline{OE}$ to nAn	0.5	5.9	0.5	5.9	0.5	5.9	0.5	5.9	0.5	5.9	ns
		$n\overline{OE}$ to nBn	0.5	13.8	0.5	10.4	0.5	8.1	0.5	5.7	0.5	5.0	ns
$V_{CC(A)}$ = 3.0 V to 3.6 V													
t_{pd}	propagation delay	nAn to nBn	0.5	8.8	0.5	6.1	0.5	4.9	0.5	3.6	0.5	3.0	ns
		nBn to nAn	0.5	5.4	0.5	4.1	0.5	3.7	0.5	3.2	0.5	3.0	ns
t_{dis}	disable time	$n\overline{OE}$ to nAn	0.5	5.5	0.5	5.5	0.5	5.5	0.5	5.5	0.5	5.5	ns
		$n\overline{OE}$ to nBn	1.0	11.4	1.0	8.5	1.0	7.2	1.0	5.8	0.5	5.5	ns
t_{en}	enable time	$n\overline{OE}$ to nAn	0.5	4.8	0.5	4.8	0.5	4.7	0.5	4.6	0.5	4.4	ns
		$n\overline{OE}$ to nBn	0.5	13.7	0.5	10.3	0.5	8.0	0.5	5.4	0.5	4.4	ns

[1] t_{pd} is the same as t_{PLH} and t_{PHL}; t_{dis} is the same as t_{PLZ} and t_{PHZ}; t_{en} is the same as t_{PZL} and t_{PZH}.

All information provided in this document is subject to legal disclaimers.

© Nexperia B.V. 2024. All rights reserved

10.1. Waveforms and test circuit

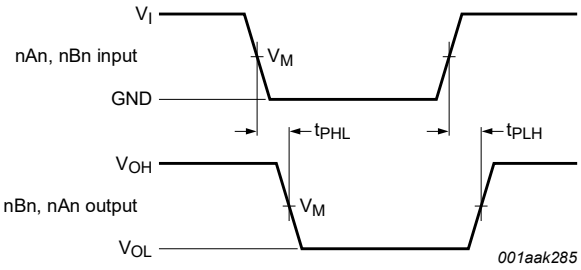

Measurement points are given in Table 14.

V_{OL} and V_{OH} are typical output voltage levels that occur with the output load.

Fig. 3. The data input (nAn, nBn) to output (nBn, nAn) propagation delay times

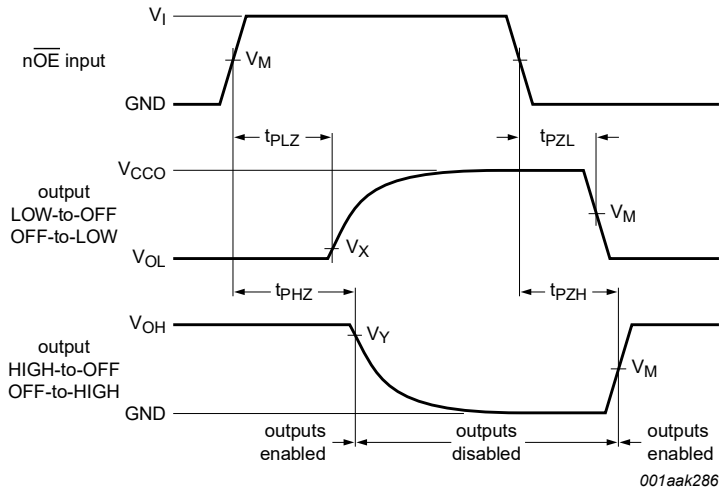

Measurement points are given in Table 14.

V_{OL} and V_{OH} are typical output voltage levels that occur with the output load.

Fig. 4. Enable and disable times

Table 14. Measurement points

Supply voltage	Input [1]	Output [2]		
$V_{CC(A)}$, $V_{CC(B)}$	V_M	V_M	V_X	V_Y
0.8 V to 1.6 V	$0.5V_{CCI}$	$0.5V_{CCO}$	V_{OL} + 0.1 V	V_{OH} - 0.1 V
1.65 V to 2.7 V	$0.5V_{CCI}$	$0.5V_{CCO}$	V_{OL} + 0.15 V	V_{OH} - 0.15 V
3.0 V to 3.6 V	$0.5V_{CCI}$	$0.5V_{CCO}$	V_{OL} + 0.3 V	V_{OH} - 0.3 V

[1] V_{CCI} is the supply voltage associated with the data input port.
[2] V_{CCO} is the supply voltage associated with the output port.

All information provided in this document is subject to legal disclaimers.

© Nexperia B.V. 2024. All rights reserved

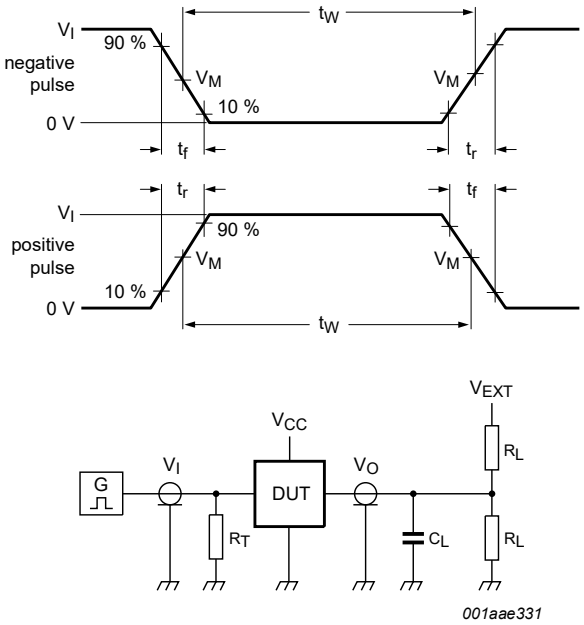

Test data is given in Table 15.

R_L = Load resistance;

C_L = Load capacitance including jig and probe capacitance;

R_T = Termination resistance;

V_{EXT} = External voltage for measuring switching times

Fig. 5. Test circuit for measuring switching times

Table 15. Test data

Supply voltage	Input		Load		V_{EXT}		
$V_{CC(A)}$, $V_{CC(B)}$	V_I [1]	Δt/ΔV [2]	C_L	R_L	t_{PLH}, t_{PHL}	t_{PZH}, t_{PHZ}	t_{PZL}, t_{PLZ} [3]
0.8 V to 1.6 V	V_{CCI}	≤ 1.0 ns/V	15 pF	2 kΩ	open	GND	$2V_{CCO}$
1.65 V to 2.7 V	V_{CCI}	≤ 1.0 ns/V	15 pF	2 kΩ	open	GND	$2V_{CCO}$
3.0 V to 3.6 V	V_{CCI}	≤ 1.0 ns/V	15 pF	2 kΩ	open	GND	$2V_{CCO}$

[1] V_{CCI} is the supply voltage associated with the data input port.
[2] dV/dt ≥ 1.0 V/ns
[3] V_{CCO} is the supply voltage associated with the output port.

All information provided in this document is subject to legal disclaimers.
© Nexperia B.V. 2024. All rights reserved

10.2. Typical propagation delay characteristics

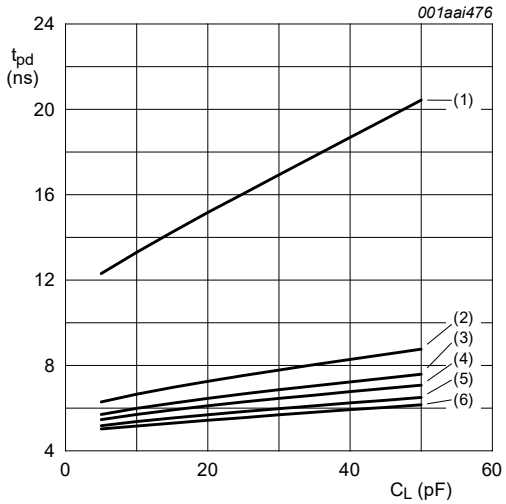

a. Propagation delay (nAn to nBn); $V_{CC(A)}$ = 0.8 V
(1) $V_{CC(B)}$ = 0.8 V.
(2) $V_{CC(B)}$ = 1.2 V.
(3) $V_{CC(B)}$ = 1.5 V.
(4) $V_{CC(B)}$ = 1.8 V.
(5) $V_{CC(B)}$ = 2.5 V.
(6) $V_{CC(B)}$ = 3.3 V.

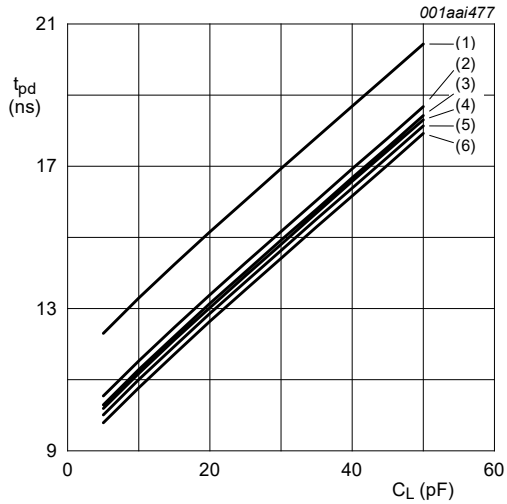

b. Propagation delay (nAn to nBn); $V_{CC(B)}$ = 0.8 V
(1) $V_{CC(A)}$ = 0.8 V.
(2) $V_{CC(A)}$ = 1.2 V.
(3) $V_{CC(A)}$ = 1.5 V.
(4) $V_{CC(A)}$ = 1.8 V.
(5) $V_{CC(A)}$ = 2.5 V.
(6) $V_{CC(A)}$ = 3.3 V.

Fig. 6. Typical propagation delay versus load capacitance; T_{amb} = 25 °C

All information provided in this document is subject to legal disclaimers.
© Nexperia B.V. 2024. All rights reserved

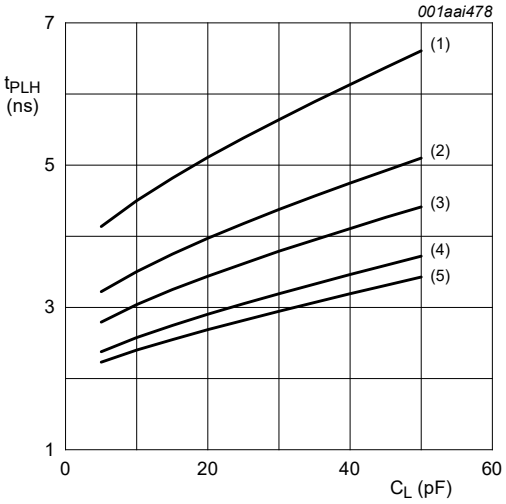

a. LOW to HIGH propagation delay (nAn to nBn); $V_{CC(A)}$ = 1.2 V

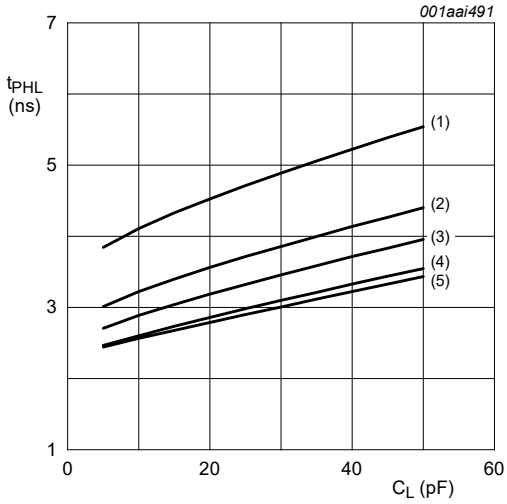

b. HIGH to LOW propagation delay (nAn to nBn); $V_{CC(A)}$ = 1.2 V

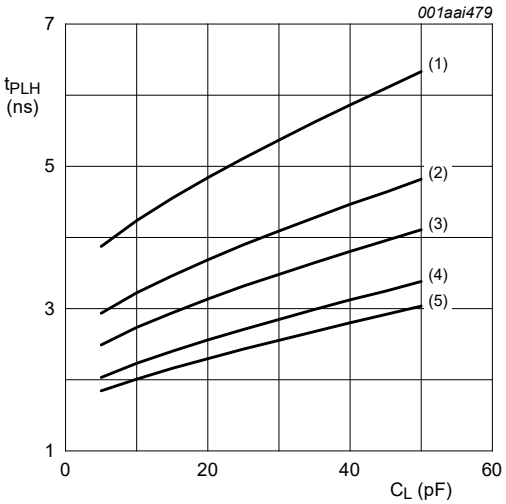

c. LOW to HIGH propagation delay (nAn to nBn); $V_{CC(A)}$ = 1.5 V

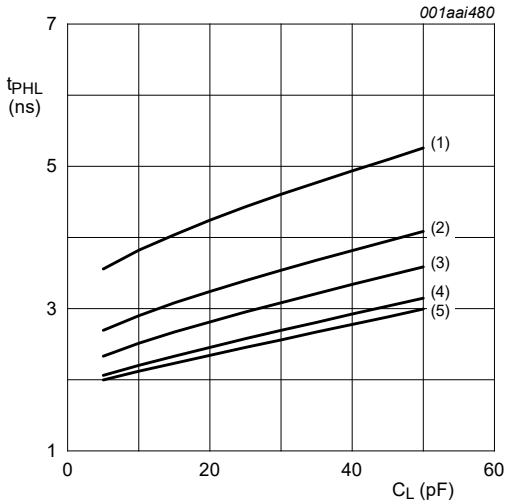

d. HIGH to LOW propagation delay (nAn to nBn); $V_{CC(A)}$ = 1.5 V

(1) $V_{CC(B)}$ = 1.2 V.
(2) $V_{CC(B)}$ = 1.5 V.
(3) $V_{CC(B)}$ = 1.8 V.
(4) $V_{CC(B)}$ = 2.5 V.
(5) $V_{CC(B)}$ = 3.3 V.

Fig. 7. Typical propagation delay versus load capacitance; T_{amb} = 25 °C

All information provided in this document is subject to legal disclaimers.

© Nexperia B.V. 2024. All rights reserved

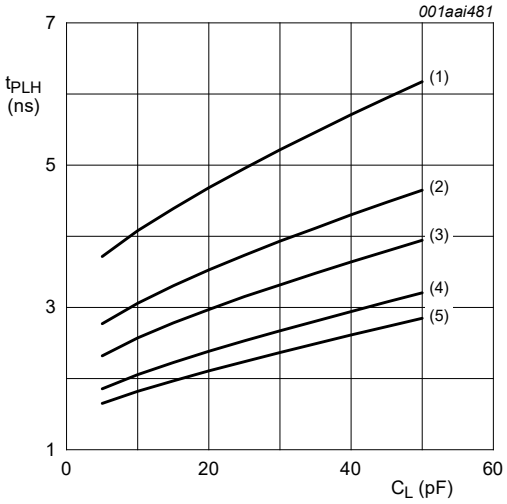

a. LOW to HIGH propagation delay (nAn to nBn); $V_{CC(A)}$ = 1.8 V

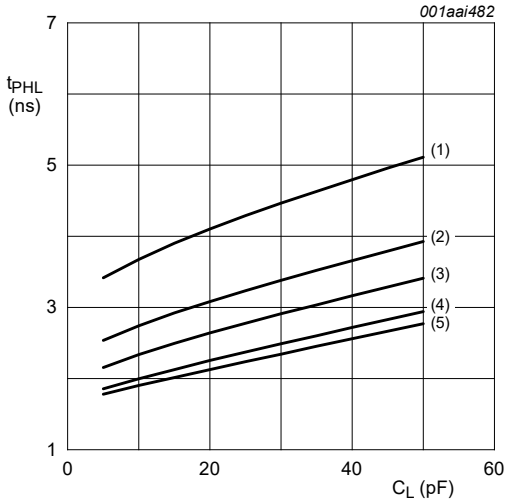

b. HIGH to LOW propagation delay (nAn to nBn); $V_{CC(A)}$ = 1.8 V

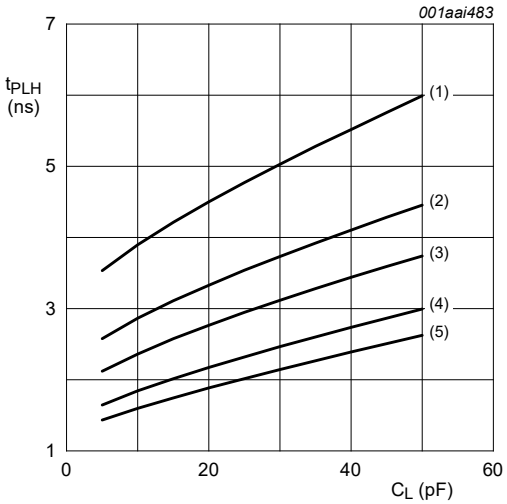

c. LOW to HIGH propagation delay (nAn to nBn); $V_{CC(A)}$ = 2.5 V

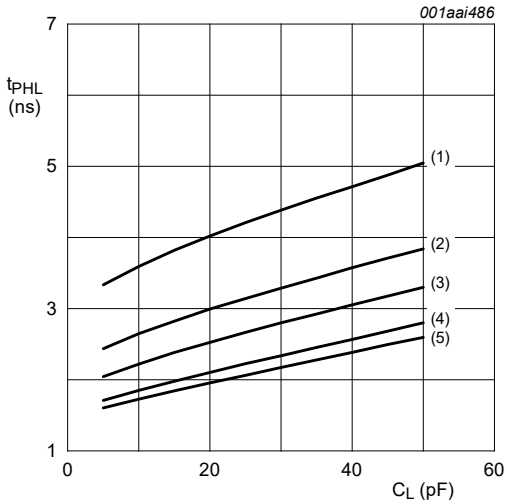

d. HIGH to LOW propagation delay (nAn to nBn); $V_{CC(A)}$ = 2.5 V

(1) $V_{CC(B)}$ = 1.2 V.
(2) $V_{CC(B)}$ = 1.5 V.
(3) $V_{CC(B)}$ = 1.8 V.
(4) $V_{CC(B)}$ = 2.5 V.
(5) $V_{CC(B)}$ = 3.3 V.

Fig. 8. Typical propagation delay versus load capacitance; T_{amb} = 25 °C

All information provided in this document is subject to legal disclaimers.

© Nexperia B.V. 2024. All rights reserved

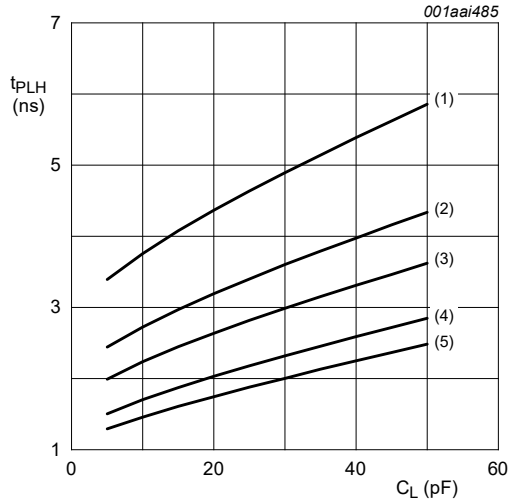

a. LOW to HIGH propagation delay (nAn to nBn); $V_{CC(A)}$ = 3.3 V

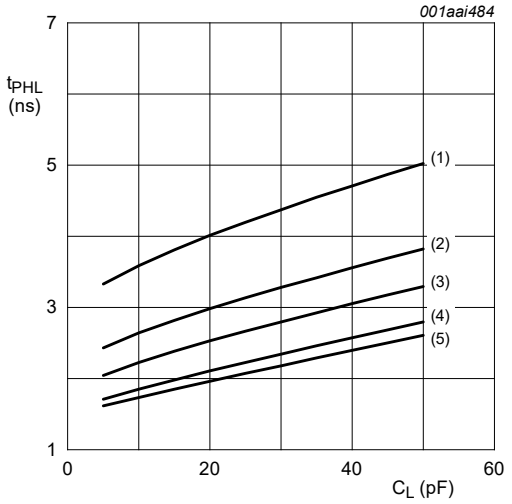

b. HIGH to LOW propagation delay (nAn to nBn); $V_{CC(A)}$ = 3.3 V

(1) $V_{CC(B)}$ = 1.2 V.
(2) $V_{CC(B)}$ = 1.5 V.
(3) $V_{CC(B)}$ = 1.8 V.
(4) $V_{CC(B)}$ = 2.5 V.
(5) $V_{CC(B)}$ = 3.3 V.

Fig. 9. Typical propagation delay versus load capacitance; T_{amb} = 25 °C

All information provided in this document is subject to legal disclaimers.

© Nexperia B.V. 2024. All rights reserved

11. Package outline

TSSOP48: plastic thin shrink small outline package; 48 leads; body width 6.1 mm **SOT362-1**

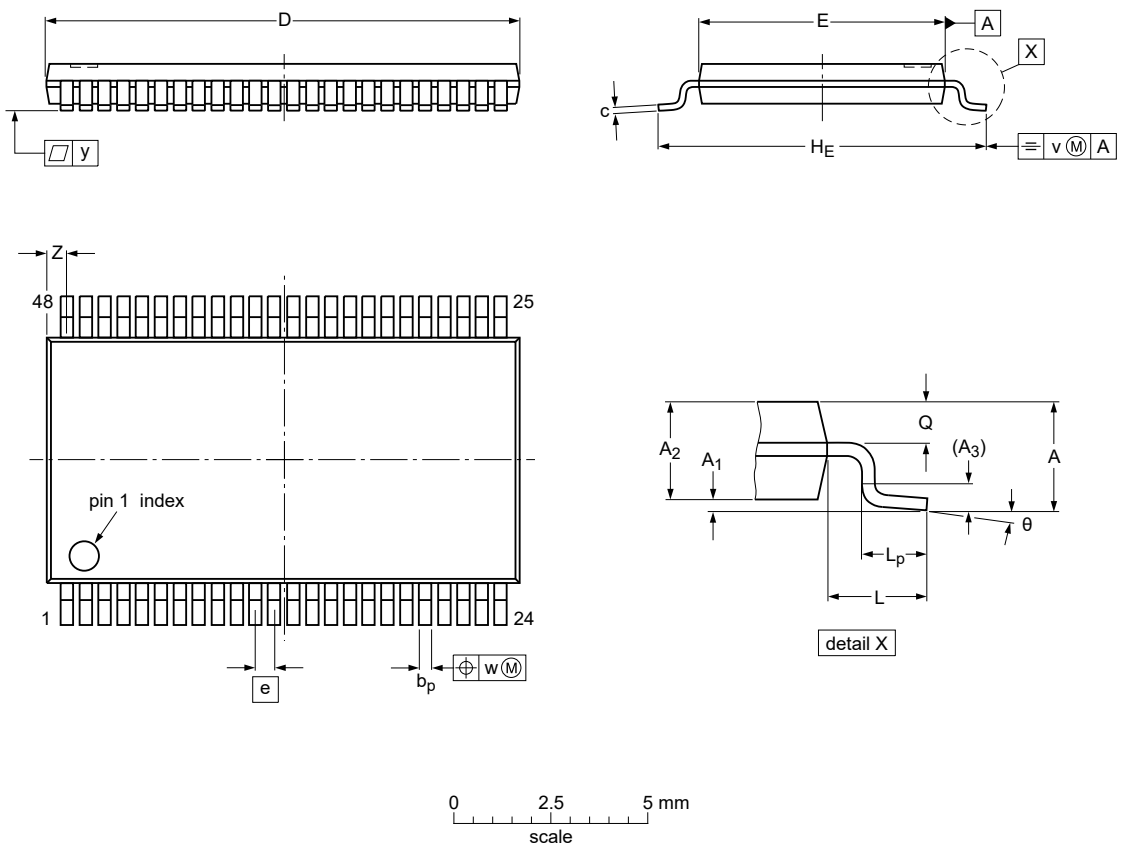

Dimensions (mm are the original dimensions)

Unit		A	A_1	A_2	A_3	b_p	c	$D^{(1)}$	$E^{(2)}$	e	H_E	L	L_p	Q	v	w	y	Z	θ
mm	max	1.2	0.15	1.05		0.28	0.2	12.6	6.2		8.3		0.8	0.50				0.8	8°
	nom				0.25					0.5		1			0.25	0.08	0.1		
	min		0.05	0.85		0.17	0.1	12.4	6.0		7.9		0.4	0.35				0.4	0°

Note
1. Plastic or metal protrusions of 0.15 mm maximum per side are not included.
2. Plastic interlead protrusions of 0.25 mm maximum per side are not included.

sot362-1_po

Outline version	References				European projection	Issue date
	IEC	JEDEC	JEITA			
SOT362-1		MO-153				~~13-08-05~~ 24-01-05

Fig. 10. Package outline SOT362-1 (TSSOP48)

All information provided in this document is subject to legal disclaimers.

© Nexperia B.V. 2024. All rights reserved

12. Abbreviations

Table 16. Abbreviations

Acronym	Description
CDM	Charged Device Model
DUT	Device Under Test
ESD	ElectroStatic Discharge
HBM	Human Body Model
MM	Machine Model

13. Revision history

Table 17. Revision history

Document ID	Release date	Data sheet status	Change notice	Supersedes
74AVCH16T245 v.7	20240426	Product data sheet	-	74AVCH16T245 v.6
Modifications:	• Section 7: Derating values for P_{tot} total power dissipation updated. • Fig. 10: Updated package outline drawing SOT362-1 (TSSOP48).			
74AVCH16T245 v.6	20190403	Product data sheet	-	74AVCH16T245 v.5
Modifications:	• The format of this data sheet has been redesigned to comply with the identity guidelines of Nexperia. • Legal texts have been adapted to the new company name where appropriate. • Type numbers 74AVCH16T245DGV (SOT480-1), 74AVCH16T245EV (SOT702-1) and 74AVCH16T245BX (SOT1134-2) removed. • Package outline drawing SOT362-1 (TSSOP48) updated.			
74AVCH16T245 v.5	20120301	Product data sheet	-	74AVCH16T245 v.4
Modifications:	• For type number 74AVCH16T245BX the SOT code has changed to SOT1134-2.			
74AVCH16T245 v.4	20111207	Product data sheet	-	74AVCH16T245 v.3
Modifications:	• Legal pages updated.			
74AVCH16T245 v.3	20110616	Product data sheet	-	74AVCH16T245 v.2
74AVCH16T245 v.2	20100329	Product data sheet	-	74AVCH16T245 v.1
74AVCH16T245 v.1	20091014	Product data sheet	-	-

All information provided in this document is subject to legal disclaimers.

© Nexperia B.V. 2024. All rights reserved

14. Legal information

Data sheet status

Document status [1][2]	Product status [3]	Definition
Objective [short] data sheet	Development	This document contains data from the objective specification for product development.
Preliminary [short] data sheet	Qualification	This document contains data from the preliminary specification.
Product [short] data sheet	Production	This document contains the product specification.

[1] Please consult the most recently issued document before initiating or completing a design.
[2] The term 'short data sheet' is explained in section "Definitions".
[3] The product status of device(s) described in this document may have changed since this document was published and may differ in case of multiple devices. The latest product status information is available on the internet at https://www.nexperia.com.

Definitions

Draft — The document is a draft version only. The content is still under internal review and subject to formal approval, which may result in modifications or additions. Nexperia does not give any representations or warranties as to the accuracy or completeness of information included herein and shall have no liability for the consequences of use of such information.

Short data sheet — A short data sheet is an extract from a full data sheet with the same product type number(s) and title. A short data sheet is intended for quick reference only and should not be relied upon to contain detailed and full information. For detailed and full information see the relevant full data sheet, which is available on request via the local Nexperia sales office. In case of any inconsistency or conflict with the short data sheet, the full data sheet shall prevail.

Product specification — The information and data provided in a Product data sheet shall define the specification of the product as agreed between Nexperia and its customer, unless Nexperia and customer have explicitly agreed otherwise in writing. In no event however, shall an agreement be valid in which the Nexperia product is deemed to offer functions and qualities beyond those described in the Product data sheet.

Disclaimers

Limited warranty and liability — Information in this document is believed to be accurate and reliable. However, Nexperia does not give any representations or warranties, expressed or implied, as to the accuracy or completeness of such information and shall have no liability for the consequences of use of such information. Nexperia takes no responsibility for the content in this document if provided by an information source outside of Nexperia.

In no event shall Nexperia be liable for any indirect, incidental, punitive, special or consequential damages (including - without limitation - lost profits, lost savings, business interruption, costs related to the removal or replacement of any products or rework charges) whether or not such damages are based on tort (including negligence), warranty, breach of contract or any other legal theory.

Notwithstanding any damages that customer might incur for any reason whatsoever, Nexperia's aggregate and cumulative liability towards customer for the products described herein shall be limited in accordance with the Terms and conditions of commercial sale of Nexperia.

Right to make changes — Nexperia reserves the right to make changes to information published in this document, including without limitation specifications and product descriptions, at any time and without notice. This document supersedes and replaces all information supplied prior to the publication hereof.

Suitability for use — Nexperia products are not designed, authorized or warranted to be suitable for use in life support, life-critical or safety-critical systems or equipment, nor in applications where failure or malfunction of an Nexperia product can reasonably be expected to result in personal injury, death or severe property or environmental damage. Nexperia and its suppliers accept no liability for inclusion and/or use of Nexperia products in such equipment or applications and therefore such inclusion and/or use is at the customer's own risk.

Quick reference data — The Quick reference data is an extract of the product data given in the Limiting values and Characteristics sections of this document, and as such is not complete, exhaustive or legally binding.

Applications — Applications that are described herein for any of these products are for illustrative purposes only. Nexperia makes no representation or warranty that such applications will be suitable for the specified use without further testing or modification.

Customers are responsible for the design and operation of their applications and products using Nexperia products, and Nexperia accepts no liability for any assistance with applications or customer product design. It is customer's sole responsibility to determine whether the Nexperia product is suitable and fit for the customer's applications and products planned, as well as for the planned application and use of customer's third party customer(s). Customers should provide appropriate design and operating safeguards to minimize the risks associated with their applications and products.

Nexperia does not accept any liability related to any default, damage, costs or problem which is based on any weakness or default in the customer's applications or products, or the application or use by customer's third party customer(s). Customer is responsible for doing all necessary testing for the customer's applications and products using Nexperia products in order to avoid a default of the applications and the products or of the application or use by customer's third party customer(s). Nexperia does not accept any liability in this respect.

Limiting values — Stress above one or more limiting values (as defined in the Absolute Maximum Ratings System of IEC 60134) will cause permanent damage to the device. Limiting values are stress ratings only and (proper) operation of the device at these or any other conditions above those given in the Recommended operating conditions section (if present) or the Characteristics sections of this document is not warranted. Constant or repeated exposure to limiting values will permanently and irreversibly affect the quality and reliability of the device.

Terms and conditions of commercial sale — Nexperia products are sold subject to the general terms and conditions of commercial sale, as published at http://www.nexperia.com/profile/terms, unless otherwise agreed in a valid written individual agreement. In case an individual agreement is concluded only the terms and conditions of the respective agreement shall apply. Nexperia hereby expressly objects to applying the customer's general terms and conditions with regard to the purchase of Nexperia products by customer.

No offer to sell or license — Nothing in this document may be interpreted or construed as an offer to sell products that is open for acceptance or the grant, conveyance or implication of any license under any copyrights, patents or other industrial or intellectual property rights.

Export control — This document as well as the item(s) described herein may be subject to export control regulations. Export might require a prior authorization from competent authorities.

Non-automotive qualified products — Unless this data sheet expressly states that this specific Nexperia product is automotive qualified, the product is not suitable for automotive use. It is neither qualified nor tested in accordance with automotive testing or application requirements. Nexperia accepts no liability for inclusion and/or use of non-automotive qualified products in automotive equipment or applications.

In the event that customer uses the product for design-in and use in automotive applications to automotive specifications and standards, customer (a) shall use the product without Nexperia's warranty of the product for such automotive applications, use and specifications, and (b) whenever customer uses the product for automotive applications beyond Nexperia's specifications such use shall be solely at customer's own risk, and (c) customer fully indemnifies Nexperia for any liability, damages or failed product claims resulting from customer design and use of the product for automotive applications beyond Nexperia's standard warranty and Nexperia's product specifications.

Translations — A non-English (translated) version of a document is for reference only. The English version shall prevail in case of any discrepancy between the translated and English versions.

Trademarks

Notice: All referenced brands, product names, service names and trademarks are the property of their respective owners.

All information provided in this document is subject to legal disclaimers.

© Nexperia B.V. 2024. All rights reserved

Contents

1. General description....1
2. Features and benefits....1
3. Ordering information....2
4. Functional diagram....2
5. Pinning information....3
5.1. Pinning....3
5.2. Pin description....3
6. Functional description....4
7. Limiting values....4
8. Recommended operating conditions....5
9. Static characteristics....5
10. Dynamic characteristics....9
10.1. Waveforms and test circuit....12
10.2. Typical propagation delay characteristics....14
11. Package outline....18
12. Abbreviations....19
13. Revision history....19
14. Legal information....20

© **Nexperia B.V. 2024. All rights reserved**

For more information, please visit: http://www.nexperia.com
For sales office addresses, please send an email to: salesaddresses@nexperia.com
Date of release: 26 April 2024