# 42640-1 ✔ ACTIVE

FASTON | FASTON 250

TE Internal #: 42640-1

Quick Disconnects, Receptacle, 22 - 18 AWG Wire Size, .32 - .82 mm² Wire Size, Mating Tab Width 6.35 mm [.25 in], Straight, Brass, FASTON 250

View on TE.com >

Terminals & Splices > Quick Disconnects

Quick Disconnect Terminal Type: **Receptacle**

Wire Size: **.32 - .82 mm²**

Mating Tab Width: **6.35 mm [ .25 in ]**

Mating Tab Thickness: **.81 mm [ .032 in ]**

## Features

### Product Type Features

| | |
|---|---|
| Insertion Force | Low |

### Configuration Features

| | |
|---|---|
| Connection Capacity | Single |
| Compatible With Wire & Cable Type | Discrete Wire |

### Contact Features

| | |
|---|---|
| Quick Disconnect Terminal Type | Receptacle |
| Mating Tab Width | 6.35 mm[.25 in] |
| Mating Tab Thickness | .81 mm[.032 in] |
| Terminal Orientation | Straight |
| Contact Base Material | Brass |
| Terminal Plating Material | Unplated |
| Crimp Type | F-Crimp |
| Barrel Type | Open |

### Termination Features

| | |
|---|---|
| Product Terminates To | Wire & Cable |

### Mechanical Attachment

| | |
|---|---|
| Wire Insulation Support | With |
| Mating Retention Type | Dimple |

### Dimensions

| | |
|---|---|
| Terminal Material Thickness | .41 mm[.016 in] |
| Product Length | 19.05 mm[.75 in] |
| Compatible Insulation Diameter Range | 1.52 - 2.54 mm[.06 - .1 in] |
| Wire Size | .32 - .82 mm² |

### Usage Conditions

| | |
|---|---|
| Insulation Option | Uninsulated |
| Operating Temperature Range | -40 - 110 °C[-40 - 230 °F] |

### Industry Standards

| | |
|---|---|
| Compatible With Agency/Standards Products | CSA, UL |

### Packaging Features

| | |
|---|---|
| Packaging Quantity | 12000 |
| Packaging Method | Strip/Reel |

### Other

| | |
|---|---|
| Line | Premier |

## Product Compliance

For compliance documentation, visit the product page on TE.com>

| | |
|---|---|
| EU RoHS Directive 2011/65/EU | Compliant |
| EU ELV Directive 2000/53/EC | Compliant |
| China RoHS 2 Directive MIIT Order No 32, 2016 | No Restricted Materials Above Threshold |
| EU REACH Regulation (EC) No. 1907/2006 | Current ECHA Candidate List: JAN 2024 (240)<br>Candidate List Declared Against: JAN 2024 (240)<br>Does not contain REACH SVHC |
| Halogen Content | Low Halogen - Br, Cl, F, I < 900 ppm per homogenous material. Also BFR/CFR/PVC Free |
| Solder Process Capability | Not applicable for solder process capability |

Product Compliance Disclaimer

This information is provided based on reasonable inquiry of our suppliers and represents our current actual knowledge based on the information they provided. This information is subject to change. The part numbers that TE has identified as EU RoHS compliant have a maximum concentration of 0.1% by weight in homogenous materials for lead, hexavalent chromium, mercury, PBB, PBDE, DBP, BBP, DEHP, DIBP, and 0.01% for cadmium, or qualify for an exemption to these limits as defined in the Annexes of Directive 2011/65/EU (RoHS2). Finished electrical and electronic equipment products will be CE marked as required by Directive 2011/65/EU. Components may not be CE marked. Additionally, the part numbers that TE has identified as EU ELV compliant have a maximum concentration of 0.1% by weight in homogenous materials for lead, hexavalent chromium, and mercury, and 0.01% for cadmium, or qualify for an exemption to these limits as defined in the Annexes of Directive 2000/53/EC (ELV). Regarding the REACH Regulation, the information TE provides on SVHC in articles for this part number is based on the latest European Chemicals Agency (ECHA) 'Guidance on requirements for substances in articles' posted at this URL: https://echa.europa.eu/guidance-documents/guidance-on-reach

## Compatible Parts

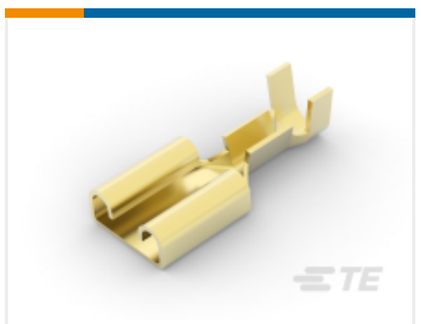

TE Part # 336235-1
250 FASTON,REC.,24-17 AWG,BR

TE Part # 336235-3
250 FASTON,REC.,24-17 AWG,PTBR

TE Part # 2150086-1
OCEAN-2.0-APPLICATOR-E-090F100O-REM

TE Part # 2150086-2
OCEAN-2.0-APPLICATOR-E-090F100O-REA

TE Part # 7-2150086-7
OCEAN_2.0_SPARE_PART_KIT-090F100F

TE Part # 737439-1
250 FASTON REC 22-18 AWG BR

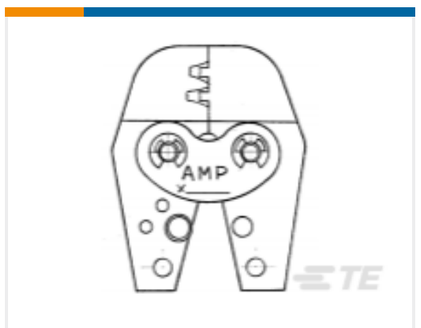


TE Part # 752856-1
DIES 90166-1

## Also in the Series | FASTON 250

Compression Connectors(4)

Crimp Terminal Housings(133)

Insertion & Extraction Tools(6)

Magnet Wire Terminals(1)

PCB Terminals(134)

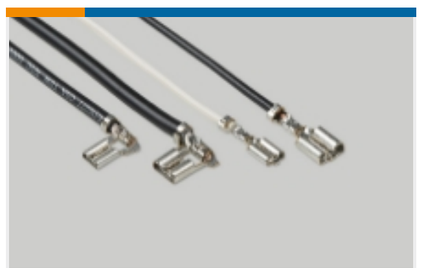

Quick Disconnects(441)

Splices(4)

## Customers Also Bought

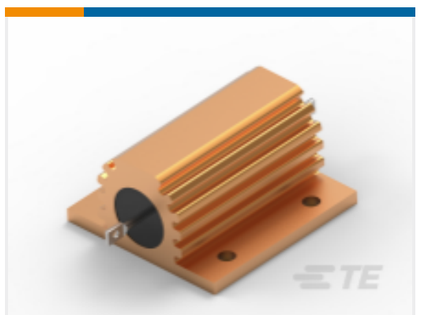

TE Part # 2-1630012-6
Power Resistors: Aluminum Housed, HSA

TE Part # 5747844-2
09 MSFL RCPT RA 318 (FM,BL)

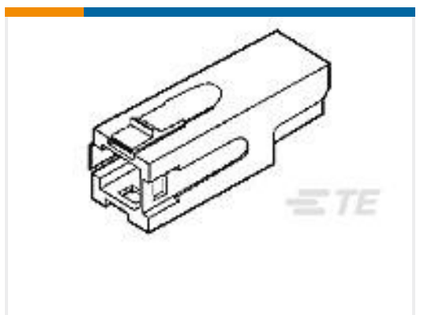

TE Part # 53884-1
HSG ASSY,PWR LK,SRS2,1 POS,BLU

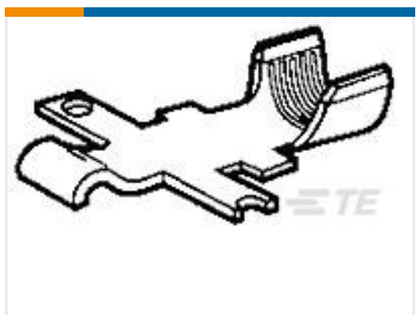

TE Part # 53880-4
CONTACT,PWR LK,SRS2,LS PC,CRMP

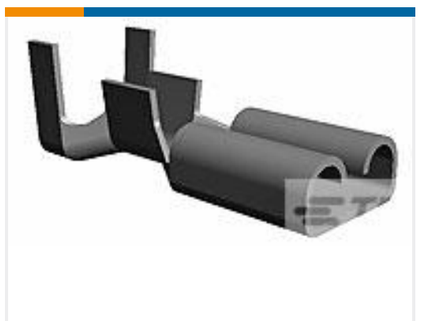

TE Part # 62138-1
187 FASTON REC 24-20 TPBR

TE Part # 61624-1
RING CRIMP 16-12 AWG BR

TE Part # 62759-1
SPLICE 400-1300 .016 BR

TE Part # 62814-1
250 FASTON FLAG REC 22-18 AWG BR

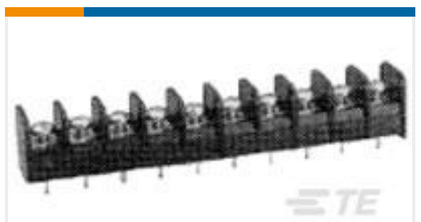

TE Part # 1-1437416-9
SSB7FP050402=SSB7FP ASSY

## Documents

### Product Drawings

250 FASTON REC 22-18 AWG BR

English

### CAD Files

Customer View Model

ENG_CVM_CVM_42640-1_AV.2d_dxf.zip

English

3D PDF

3D

### Customer View Model

ENG_CVM_CVM_42640-1_AV.3d_igs.zip

English

### Customer View Model

ENG_CVM_CVM_42640-1_AV.3d_stp.zip

English

By downloading the CAD file I accept and agree to the Terms and Conditionsof use.

## Datasheets & Catalog Pages

82004 FASTON Terminals (Insulated and Uninsulated) Catalog - FASTON Receptacles Section

English

## Product Specifications

Application Specification

English

## Agency Approvals

UL Report

English