May.1.2024 Copyright 2024 HIROSE ELECTRIC CO., LTD. All Rights Reserved.
In case of consideration for using Automotive equipment / device which demand high reliability, kindly contact our sales window correspondents.

APPLICABLE STANDARD		IEC 61076-3-124		
Rating	Operating Temperature Range	-40°C to +85°C(95%RH max) (note1,2)	Storage Temperature Range	-30°C to +60°C(95%RH max) (note1)
	Voltage	50 V AC / 60 V DC	Current	1.5 A/pin (all pin) 3 A/pin (pin No.1,2,6,7)

SPECIFICATIONS

ITEM	TEST METHOD	REQUIREMENTS	QT	AT
CONSTRUCTION				
General Examination	Examined visually and with a measuring instrument.	According to drawing.	X	X
Marking	Confirmed visually.	According to drawing.	X	X
ELECTRIC CHARACTERISTICS				
Contact Resistance	Measured at 100 mA max (DC or 1000 Hz).	Contact : 30 mΩ max. (note3) Shield : 100 mΩ max. (note3)	X	—
Insulation Resistance	Measured at 500 V DC.	500 MΩ min.	X	—
Voltage Proof	500 V DC applied for 1 min. Current leakage 2mA max.	No breakdown. 6	X	—
Insertion Loss	Measured in the range of 1 to 500 MHz.	0.02 √(f) dB max. (Whenever the formula results in a value less than 0.1 dB, the requirement shall revert to 0.1 dB.)	X	—
Return Loss	Measured in the range of 1 to 500 MHz.	68 – 20log(f) dB min. (Whenever the formula results in a value greater than 30 dB, the requirement shall revert to 30 dB.)	X	—
Near end Crosstalk	Measured in the range of 1 to 500 MHz.	94 – 20log(f) dB min. (1MHz to 250MHz) 46.04 – 30log(f/250) dB min. (250MHz to 500MHz) (Whenever the formula results in a value greater than 75 dB, the requirement shall revert to 75 dB.)	X	—
Far end crosstalk	Measured in the range of 1 to 500 MHz.	83.1 – 20log(f) dB min. (Whenever the formula results in a value greater than 75 dB, the requirement shall revert to 75 dB.)	X	—
Transverse Conversion Loss	Measured in the range of 1 to 500 MHz.	68 – 20log(f) dB min. (Whenever the formula results in a value greater than 50 dB, the requirement shall revert to 50 dB.)	X	—
Transverse Conversion Transfer Loss	Measured in the range of 1 to 500 MHz.	68 – 20log(f) dB min. (Whenever the formula results in a value greater than 50 dB, the requirement shall revert to 50 dB.)	X	—
MECHANICAL CHARACTERISTICS				
Insertion and Withdrawal Forces	A maximum rate of 50 mm/min. Measured by applicable connector.	Insertion force 25 N max. Withdrawal force 25 N max.	X	—
Mechanical Operation	5000 times insertions and extractions. Mating speed : 10 mm/s max. Rest : 5s, min.(unmated)	1) Resistance: Contact : 80 mΩ max. (note3) Shield : 100 mΩ max. (note3) 2) No damage, cracks or looseness of parts.	X	—

Note

1. Non-condensing. 2. The operation temperature includes the temperature rise by current carrying
3. The cable conductor resistance is not considered.
4. Electrical characteristics are applicable to the contacts and shield except for contacts No. 3 and 8.

	COUNT	DESCRIPTION OF REVISIONS	DESIGNED	CHECKED	DATE
6	9	DIS-E-00014809	MT.YASUDA	KI.KAGOTANI	20231121

REMARK			
	APPROVED	RI.TAKAYASU	20170621
	CHECKED	KI.NAGANUMA	20170621
	DESIGNED	YS.SAKODA	20170621
Unless otherwise specified, refer to IEC 60512.	DRAWN	YS.SAKODA	20170621

Note QT:Qualification Test AT:Assurance Test X:Applicable Test

		DRAWING NO.	ELC-129412-00-00	
HRS	SPECIFICATION SHEET	PART NO.	IX80G-A-10P	
	HIROSE ELECTRIC CO., LTD.	CODE NO.	CL0251-0018-0-00	6 1/4

FORM HD0011-2-1

May.1.2024 Copyright 2024 HIROSE ELECTRIC CO., LTD. All Rights Reserved.
In case of consideration for using Automotive equipment / device which demand high reliability, kindly contact our sales window correspondents.

SPECIFICATIONS

ITEM	TEST METHOD	REQUIREMENTS	QT	AT
Vibration ,sinusoidal	Frequency 10 to 500 Hz 0.35 mm, 50 m/s^2 2hrs in each of 3 mutually perpendicular axis.	1) No electrical discontinuity of 1μs. (note4) 2) No damage, cracks or looseness of parts.	X	—
Fretting Corrosion	490 m/s^2 , 30 times/min at 1000 times.	1) No electrical discontinuity of 1μs. (note4) 2) No damage, cracks or looseness of parts.	X	—
Mechanical Shock	Subject mated specimens to 300 m/s^2 half-sine shock pulses of 11 milliseconds duration, 3 shocks in both directions of 3 mutually perpendicular directions (totally 18 shocks)	1) No electrical discontinuity of 1μs. (note4) 2) Resistance: Contact : 80 mΩ max. (note4) Shield : 100 mΩ max. (note4) 3) No damage, cracks or looseness of parts.	X	—
Effectiveness of the connector coupling device	Applying 80 N force 60 s for the mating axis direction in state in fitted with applicable connector. 6	No unlocking, damage, cracks or looseness of parts.	X	—
Locking device mechanical operations	10000 cycles 20 cycles/min max	1) Insertion and Withdrawal Forces Insertion force 25 N max. Withdrawal force 25 N max. 2) No damage, cracks or looseness of parts.	X	—
Wrenching Strength	Applying 25times of 30 N 1s for 2 axis direction on tip of plug case in state in fitted with applicable connector.	No damage, cracks or looseness of parts.	X	—
ENVIRONMENTAL CHARACTERISTICS				
Rapid Change of Temperature	Subject mated specimens to 10 cycles between -55°C and 85°C with 30 minutes dwell at temp. extremes and 2 to 3 minutes transition between temperatures.	1) Voltage proof : 500 V DC applied for 1 min. Current leakage 2mA max. No breakdown. 6 2) Resistance: Contact : 80 mΩ max. (note3) Shield : 100 mΩ max. (note3) 3) Insulation resistance: 500 MΩ min. (at dry) 4) No damage, cracks or looseness of parts.	X	—
Humidity / Temperature Cycling	Low temperature 25 °C; High temperature 65 °C; Cold sub-cycle – 10 °C; Relative humidity 93 % Duration 10 / each 24 h (IEC 60068-2-38,test Z / AD)	1) Voltage proof : 500 V DC applied for 1 min. Current leakage 2mA max. No breakdown. 6 2) Resistance: Contact : 80 mΩ max. (note3) Shield : 100 mΩ max. (note3) 3) Insulation resistance: 500 MΩ min. (at dry) 4) Insertion and Withdrawal Forces Insertion force 25 N max. Withdrawal force 25 N max. 5) No damage, cracks or looseness of parts.	X	—
Damp Heat, Steady State	Subject mated specimens to a relative humidity of 93 % at a temperature of 40°C during 21 days.	1) Voltage proof : 500 V DC applied for 1 min. Current leakage 2mA max. No breakdown. 6 2) Resistance: Contact : 80 mΩ max. (note3) Shield : 100 mΩ max. (note3) 3) Insulation resistance: 500 MΩ min. (at dry) 4) Insertion and Withdrawal Forces Insertion force 25 N max. Withdrawal force 25 N max. 5) No damage, cracks or looseness of parts.	X	—

Note QT:Qualification Test AT:Assurance Test X:Applicable Test

HRS	SPECIFICATION SHEET	DRAWING NO.	ELC-129412-00-00	
		PART NO.	IX80G-A-10P	
	HIROSE ELECTRIC CO., LTD.	CODE NO	CL0251-0018-0-00	6 2/4

May.1.2024 Copyright 2024 HIROSE ELECTRIC CO., LTD. All Rights Reserved.
In case of consideration for using Automotive equipment / device which demand high reliability, kindly contact our sales window correspondents.

SPECIFICATIONS

ITEM	TEST METHOD	REQUIREMENTS	QT	AT
ENVIRONMENTAL CHARACTERISTICS				
Dry Heat	Subject to +85 ± 2 °C, 21 days. (mating applicable connector)	1) Voltage proof : 500 V DC applied for 1 min. Current leakage 2mA max. No breakdown. 6 2) Resistance: Contact : 80 mΩ max. (note3) Shield : 100 mΩ max. (note3) 3) Insulation resistance: 500 MΩ min. (at dry) 4) Insertion and Withdrawal Forces Insertion force 25 N max. Withdrawal force 25 N max. 5) No damage, cracks or looseness of parts.	X	—
Cold	Subject to -55 ± 3 °C, 10 days. (mating applicable connector)	1) Voltage proof : 500 V DC applied for 1 min. Current leakage 2mA max. No breakdown. 6 2) Resistance: Contact : 80 mΩ max. (note3) Shield : 100 mΩ max. (note3) 3) Insulation resistance: 500 MΩ min. (at dry) 4) Insertion and Withdrawal Forces Insertion force 25 N max. Withdrawal force 25 N max. 5) No damage, cracks or looseness of parts.	X	—
Corrosion Salt Mist	Subject to 5 % salt water, 35 ± 2 °C, 48h. (leave under unmated condition.)	No heavy corrosion of contacts.	X	—
Mixed Flowing Gas Corrosion	Test temperature : +25±1 ℃, Relative humidity : 75±3 % H_2S : 10±5 ppb, NO_2 : 200±50 ppb Cl_2 : 10±5 ppb, SO_2 : 200±20 ppb Leave the samples for 4 days with mated. The same is performed with unmated samples. (IEC 60512, method 4)	1) Resistance: Contact : 80 mΩ max. (note3) Shield : 100 mΩ max. (note3) 2) No damage, cracks or looseness of parts.	X	—
Solderability	Soldering point immersed in solder bath of +245 ± 3 °C, 3 sec. (using type r flax)	Solder shall cover minimum of 95 % of the surface being immersed.	X	—
Resistance To Soldering Heat	A profile is shown in Fig-1, under 2 cycles.	No deformation or significant looseness of contacts.	X	—

May.1.2024 Copyright 2024 HIROSE ELECTRIC CO., LTD. All Rights Reserved.
In case of consideration for using Automotive equipment / device which demand high reliability, kindly contact our sales window correspondents.

SPECIFICATIONS

ITEM	TEST METHOD	REQUIREMENTS	QT	AT

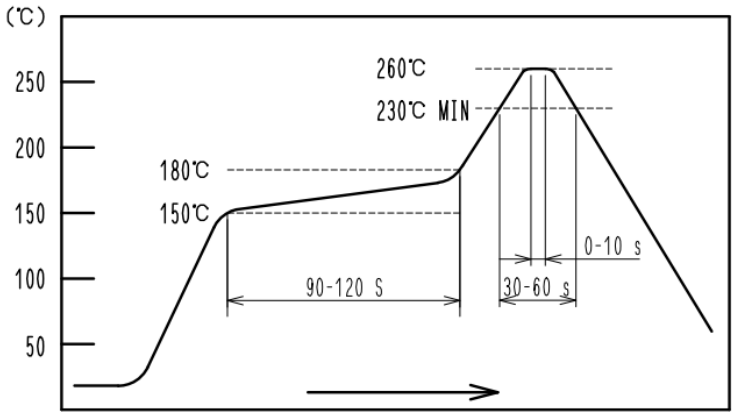

⚠6 Fig – 1 Resistance to soldering heat
(temperature at top surface of connector)

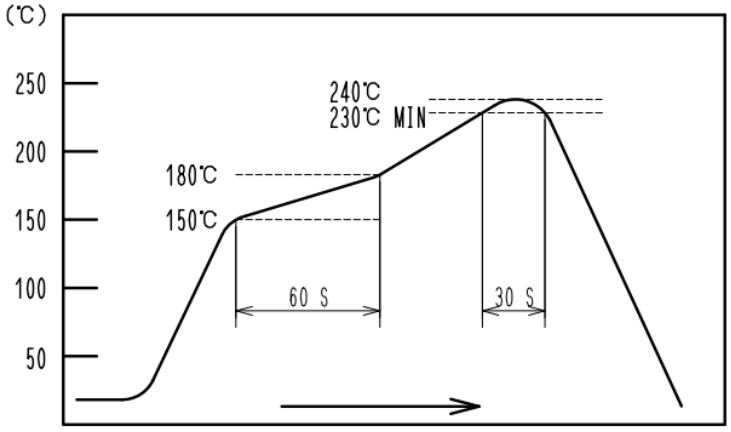

⚠6 Fig – 2 Recommended reflow profile temperature
(temperature at SMT leads)

Note QT:Qualification Test AT:Assurance Test X:Applicable Test		DRAWING NO.	ELC-129412-00-00		
HRS	SPECIFICATION SHEET	PART NO.	IX80G-A-10P		
	HIROSE ELECTRIC CO., LTD.	CODE NO	CL0251-0018-0-00	⚠6	4/4

FORM HD0011-2-2