Dome Lens SMD LED

VLD.1235R...



VLD.1235G...



FEATURES

- Utilizing latest advanced AlInGaP technology
- Package type: surface-mount
- Package form: gullwing, reverse gullwing
- Dimensions (L x W x H in mm): 2.3 x 2.3 x 2.8
- High luminous flux and luminous intensity
- Luminous intensity and color categorized per packing unit
- Luminous intensity ratio per packing unit $I_{Vmax.}/I_{Vmin.} \leq 1.6$
- ESD-withstand voltage: up to 2 kV according to JESD22-A114-B
- Preconditioning according to JEDEC® level 2a
- Suitable for reflow soldering according to J-STD-020
- Material categorization: for definitions of compliance please see www.vishay.com/doc?99912

Pb-free

e3

RoHS COMPLIANT

HALOGEN FREE

GREEN (5-2008)

DESCRIPTION

The dome lens SMD LED series has been designed in a small untinted and clear molded package with lens for surface mounting as gullwing or reverse gullwing version. The VLD.1235... series is using recent ultrabright AlInGaP / Si chip technology with high luminous flux and large chip size allowing a high DC forward current up to 70 mA.

PRODUCT GROUP AND PACKAGE DATA

- Product group: LED
- Product series: power
- Package: SMD dome lens
- Angle of half intensity: ± 11°

APPLICATIONS

- Traffic signals and signs
- Interior and exterior lighting
- Indicator and backlighting purposes for audio, video, LCDs switches, symbols, illuminated advertising etc.

PARTS TABLE

PART	COLOR	LUMINOUS INTENSITY (mcd)			at I_F (mA)	WAVELENGTH (nm)			at I_F (mA)	FORWARD VOLTAGE (V)			at I_F (mA)	TECHNOLOGY
		MIN.	TYP.	MAX.		MIN.	TYP.	MAX.		MIN.	TYP.	MAX.		
VLDS1235G	Super red	5600	11 000	22 400	50	626	630	637	50	1.9	2.2	2.7	50	AlInGaP on Si
VLDS1235R	Super red	5600	11 000	22 400	50	626	630	637	50	1.9	2.2	2.7	50	AlInGaP on Si
VLDR1235G	Red	9000	14 500	35 500	50	619	624	631	50	1.9	2.2	2.7	50	AlInGaP on Si
VLDR1235R	Red	9000	14 500	35 500	50	619	624	631	50	1.9	2.2	2.7	50	AlInGaP on Si
VLDK1235G	Amber	9000	18 000	35 500	50	611	616	621	50	1.9	2.25	2.7	50	AlInGaP on Si
VLDK1235R	Amber	9000	18 000	35 500	50	611	616	621	50	1.9	2.25	2.7	50	AlInGaP on Si
VLDY1235G	Yellow	9000	18 000	35 500	50	583	589	595	50	1.9	2.3	2.7	50	AlInGaP on Si
VLDY1235R	Yellow	9000	18 000	35 500	50	583	589	595	50	1.9	2.3	2.7	50	AlInGaP on Si
VLDS1235G-08	Super red	5600	11 000	22 400	50	626	630	637	50	1.9	2.2	2.7	50	AlInGaP on Si
VLDS1235R-08	Super red	5600	11 000	22 400	50	626	630	637	50	1.9	2.2	2.7	50	AlInGaP on Si
VLDR1235G-08	Red	9000	14 500	35 500	50	619	624	631	50	1.9	2.2	2.7	50	AlInGaP on Si
VLDR1235R-08	Red	9000	14 500	35 500	50	619	624	631	50	1.9	2.2	2.7	50	AlInGaP on Si
VLDK1235G-08	Amber	9000	18 000	35 500	50	611	616	621	50	1.9	2.25	2.7	50	AlInGaP on Si
VLDK1235R-08	Amber	9000	18 000	35 500	50	611	616	621	50	1.9	2.25	2.7	50	AlInGaP on Si
VLDY1235G-08	Yellow	9000	18 000	35 500	50	583	589	595	50	1.9	2.3	2.7	50	AlInGaP on Si
VLDY1235R-08	Yellow	9000	18 000	35 500	50	583	589	595	50	1.9	2.3	2.7	50	AlInGaP on Si

For technical questions, contact: LED@vishay.com
THIS DOCUMENT IS SUBJECT TO CHANGE WITHOUT NOTICE. THE PRODUCTS DESCRIBED HEREIN AND THIS DOCUMENT ARE SUBJECT TO SPECIFIC DISCLAIMERS, SET FORTH AT www.vishay.com/doc?91000

ABSOLUTE MAXIMUM RATINGS (T_{amb} = 25 °C, unless otherwise specified) **VLDS1235..., VLDR1235..., VLDK1235..., VLDY1235...**				
PARAMETER	**TEST CONDITION**	**SYMBOL**	**VALUE**	**UNIT**
Reverse voltage (1)	Short term application only	V_R	5	V
DC Forward current	$T_{amb} \leq 60$ °C	I_F	70	mA
Power dissipation		P_V	200	mW
Junction temperature		T_j	125	°C
Operating temperature range		T_{amb}	-40 to +100	°C
Storage temperature range		T_{stg}	-40 to +100	°C
Thermal resistance junction-to-ambient	Mounted on PC board (pad size > 16 mm²)	R_{thJA}	325	K/W

Note
(1) Driving the LED in reverse direction is suitable for a short term application only

OPTICAL AND ELECTRICAL CHARACTERISTICS (T_{amb} = 25 °C, unless otherwise specified) **VLDS1235G, VLDS1235R, SUPER RED**						
PARAMETER	**TEST CONDITION**	**SYMBOL**	**MIN.**	**TYP.**	**MAX.**	**UNIT**
Luminous intensity (1)	I_F = 50 mA	I_V	5600	11 000	22 400	mcd
Luminous flux/luminous intensity		ϕ_V/I_V	-	0.5	-	mlm/mcd
Dominant wavelength (1)	I_F = 50 mA	λ_d	626	630	637	nm
Peak wavelength	I_F = 50 mA	λ_p	-	639	-	nm
Spectral bandwidth at 50 % $I_{rel\ max.}$	I_F = 50 mA	$\Delta\lambda$	-	18	-	nm
Angle of half intensity	I_F = 50 mA	φ	-	± 11	-	deg
Forward voltage (1)	I_F = 50 mA	V_F	1.9	2.2	2.7	V
Reverse current	V_R = 5 V	I_R	-	0.01	10	µA

Note
(1) Tolerances: ± 15 % for I_V, ± 0.1 V for V_F, ± 1 nm for λ_d

OPTICAL AND ELECTRICAL CHARACTERISTICS (T_{amb} = 25 °C, unless otherwise specified) **VLDR1235G, VLDR1235R, RED**						
PARAMETER	**TEST CONDITION**	**SYMBOL**	**MIN.**	**TYP.**	**MAX.**	**UNIT**
Luminous intensity (1)	I_F = 50 mA	I_V	9000	14 500	35 500	mcd
Luminous flux/luminous intensity		ϕ_V/I_V	-	0.5	-	mlm/mcd
Dominant wavelength (1)	I_F = 50 mA	λ_d	619	624	631	nm
Peak wavelength	I_F = 50 mA	λ_p	-	632	-	nm
Spectral bandwidth at 50 % $I_{rel\ max.}$	I_F = 50 mA	$\Delta\lambda$	-	18	-	nm
Angle of half intensity	I_F = 50 mA	φ	-	± 11	-	deg
Forward voltage (1)	I_F = 50 mA	V_F	1.9	2.2	2.7	V
Reverse current	V_R = 5 V	I_R	-	0.01	10	µA

Note
(1) Tolerances: ± 15 % for I_V, ± 0.1 V for V_F, ± 1 nm for λ_d

OPTICAL AND ELECTRICAL CHARACTERISTICS (T_{amb} = 25 °C, unless otherwise specified) **VLDK1235G, VLDK1235R, AMBER**						
PARAMETER	**TEST CONDITION**	**SYMBOL**	**MIN.**	**TYP.**	**MAX.**	**UNIT**
Luminous intensity (1)	I_F = 50 mA	I_V	9000	18 000	35 500	mcd
Luminous flux/luminous intensity		ϕ_V/I_V	-	0.5	-	mlm/mcd
Dominant wavelength (1)	I_F = 50 mA	λ_d	611	616	621	nm
Peak wavelength	I_F = 50 mA	λ_p	-	622	-	nm
Spectral bandwidth at 50 % $I_{rel\ max.}$	I_F = 50 mA	$\Delta\lambda$	-	18	-	nm
Angle of half intensity	I_F = 50 mA	φ	-	± 11	-	deg
Forward voltage (1)	I_F = 50 mA	V_F	1.9	2.25	2.7	V
Reverse current	V_R = 5 V	I_R	-	0.01	10	µA

Note
(1) Tolerances: ± 15 % for I_V, ± 0.1 V for V_F, ± 1 nm for λ_d

For technical questions, contact: LED@vishay.com
THIS DOCUMENT IS SUBJECT TO CHANGE WITHOUT NOTICE. THE PRODUCTS DESCRIBED HEREIN AND THIS DOCUMENT ARE SUBJECT TO SPECIFIC DISCLAIMERS, SET FORTH AT www.vishay.com/doc?91000

OPTICAL AND ELECTRICAL CHARACTERISTICS (T_{amb} = 25 °C, unless otherwise specified)
VLDY1235G, VLDY1235R, YELLOW

PARAMETER	TEST CONDITION	SYMBOL	MIN.	TYP.	MAX.	UNIT
Luminous intensity (1)	I_F = 50 mA	I_V	9000	18 000	35 500	mcd
Luminous flux/luminous intensity		ϕ_V/I_V	-	0.5	-	mlm/mcd
Dominant wavelength (1)	I_F = 50 mA	λ_d	583	589	595	nm
Peak wavelength	I_F = 50 mA	λ_p	-	591	-	nm
Spectral bandwidth at 50 % $I_{rel\ max.}$	I_F = 50 mA	$\Delta\lambda$		17		nm
Angle of half intensity	I_F = 50 mA	φ		± 11		deg
Forward voltage (1)	I_F = 50 mA	V_F	1.9	2.3	2.7	V
Reverse current	V_R = 5 V	I_R		0.01	10	µA

Note

(1) Tolerances: ± 15 % for I_V, ± 0.1 V for V_F, ± 1 nm for λ_d

COLOR CLASSIFICATION

GROUP	DOMINANT WAVELENGTH (nm)			
	AMBER		YELLOW	
	MIN.	MAX.	MIN.	MAX.
2	611	616		
3	616	621	583	586
4			586	589
5			589	592
6			592	595

Note

- Wavelengths are tested at a current pulse duration of 25 ms and an accuracy of ± 1 nm

LUMINOUS INTENSITY CLASSIFICATION

GROUP	LUMINOUS INTENSITY (mcd)	
STANDARD	MIN.	MAX.
DB	5600	7100
EA	7100	9000
EB	9000	11 200
FA	11 200	14 000
FB	14 000	18 000
GA	18 000	22 400
GB	22 400	28 000
HA	28 000	35 500

Note

- Luminous intensity is tested at a current pulse duration of 25 ms and an accuracy of ± 15 %.
  The above type numbers represent the order groups which include only a few brightness groups. Only one group will be shipped on each reel (there will be no mixing of two groups on each reel).
  In order to ensure availability, single brightness groups will not be orderable.
  In a similar manner for colors where wavelength groups are measured and binned, single wavelength groups will be shipped on any one reel.
  In order to ensure availability, single wavelength groups will not be orderable

For technical questions, contact: LED@vishay.com
THIS DOCUMENT IS SUBJECT TO CHANGE WITHOUT NOTICE. THE PRODUCTS DESCRIBED HEREIN AND THIS DOCUMENT ARE SUBJECT TO SPECIFIC DISCLAIMERS, SET FORTH AT www.vishay.com/doc?91000

TYPICAL CHARACTERISTICS (T_{amb} = 25 °C, unless otherwise specified)

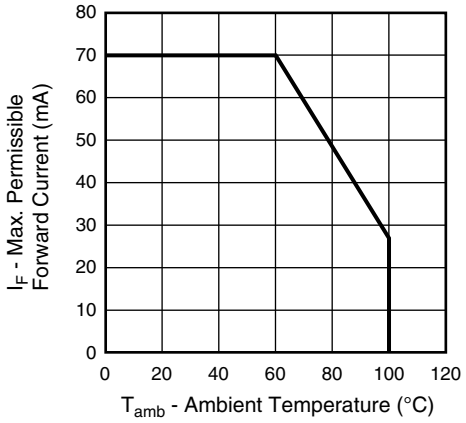

Fig. 1 - Maximum Permissible Forward Current vs. Ambient Temperature

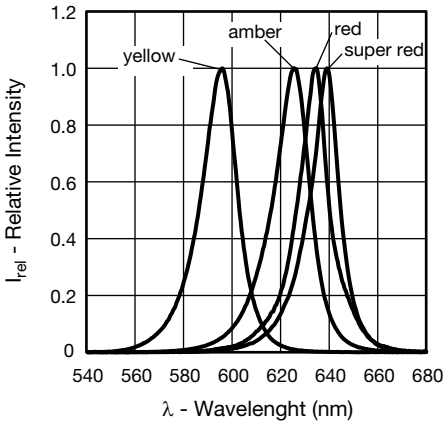

Fig. 4 - Relative Intensity vs. Wavelength

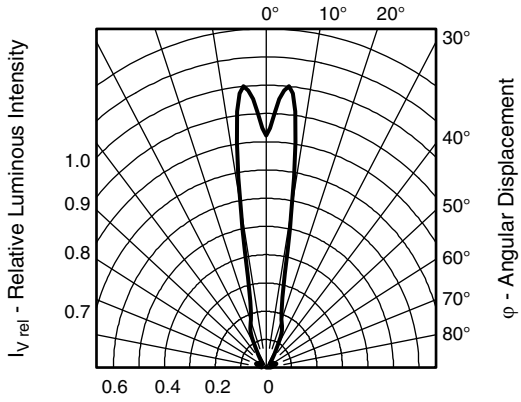

Fig. 2 - Relative Luminous Intensity vs. Angular Displacement

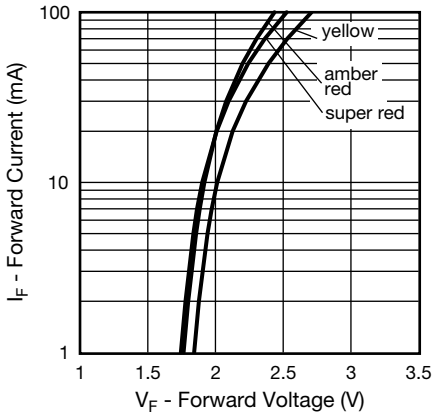

Fig. 5 - Forward Current vs. Forward Voltage

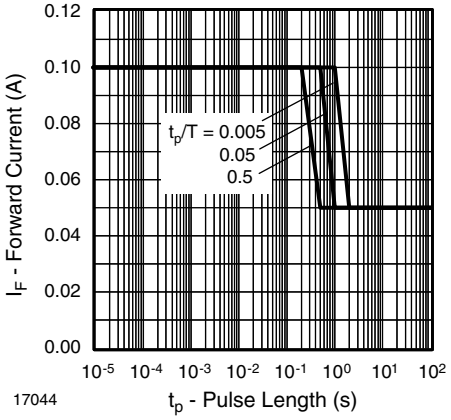

Fig. 3 - Forward Current vs. Pulse Length

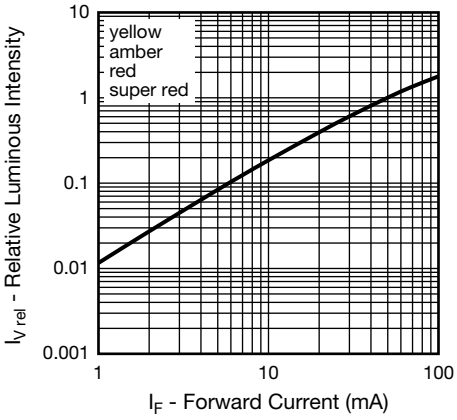

Fig. 6 - Relative Luminous Intensity vs. Forward Current

For technical questions, contact: LED@vishay.com
THIS DOCUMENT IS SUBJECT TO CHANGE WITHOUT NOTICE. THE PRODUCTS DESCRIBED HEREIN AND THIS DOCUMENT ARE SUBJECT TO SPECIFIC DISCLAIMERS, SET FORTH AT www.vishay.com/doc?91000

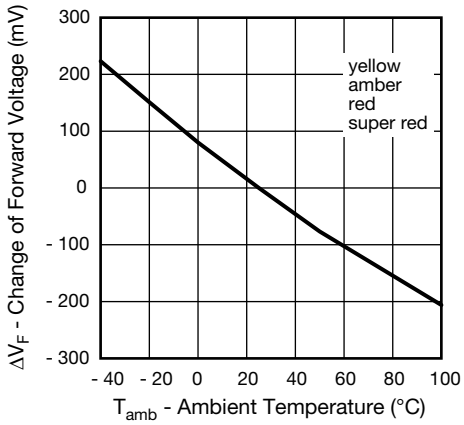

Fig. 7 - Change of Forward Voltage vs. Ambient Temperature

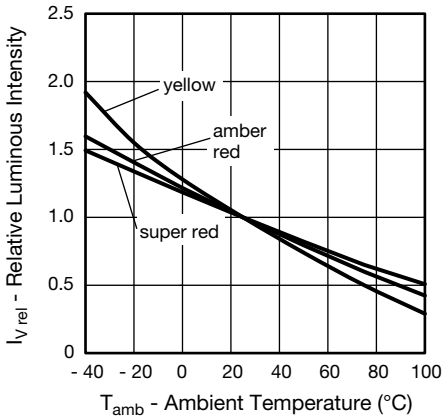

Fig. 8 - Relative Luminous Intensity vs. Ambient Temperature

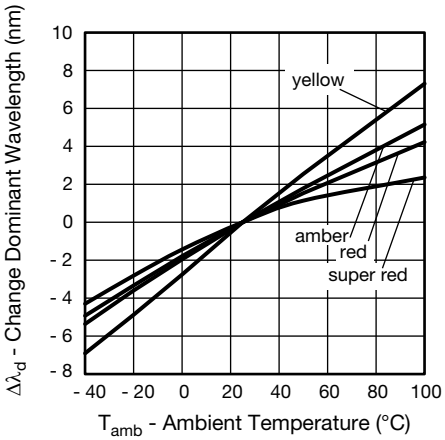

Fig. 9 - Change of Dominant Wavelength vs. Ambient Temperature

For technical questions, contact: LED@vishay.com
THIS DOCUMENT IS SUBJECT TO CHANGE WITHOUT NOTICE. THE PRODUCTS DESCRIBED HEREIN AND THIS DOCUMENT ARE SUBJECT TO SPECIFIC DISCLAIMERS, SET FORTH AT www.vishay.com/doc?91000

PACKAGE DIMENSIONS in millimeters: **VLD.1235G..** (gullwing)

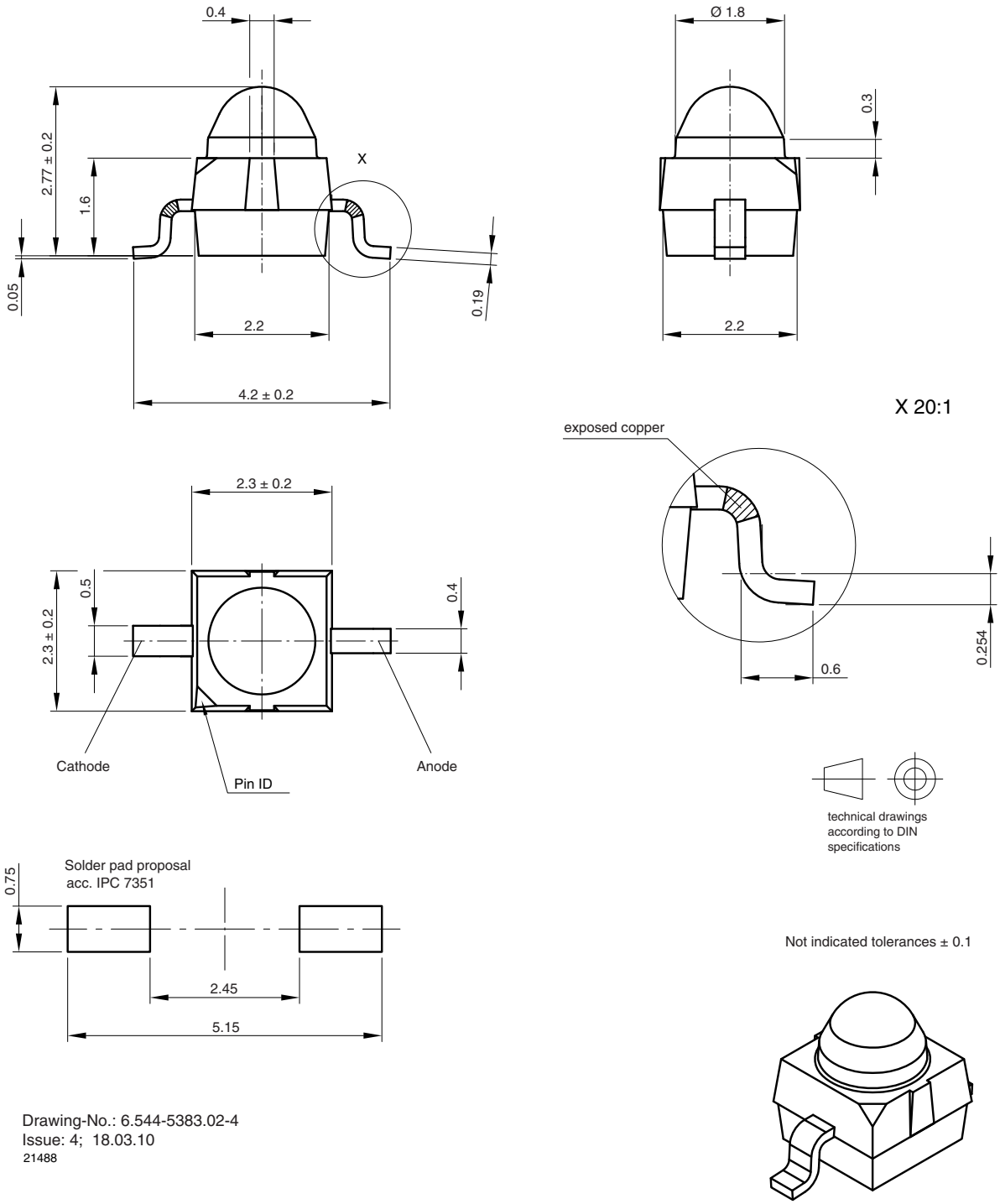

Drawing-No.: 6.544-5383.02-4
Issue: 4; 18.03.10
21488

For technical questions, contact: LED@vishay.com
THIS DOCUMENT IS SUBJECT TO CHANGE WITHOUT NOTICE. THE PRODUCTS DESCRIBED HEREIN AND THIS DOCUMENT ARE SUBJECT TO SPECIFIC DISCLAIMERS, SET FORTH AT www.vishay.com/doc?91000

PACKAGE DIMENSIONS in millimeters: **VLD.1235R..** (reverse gullwing)

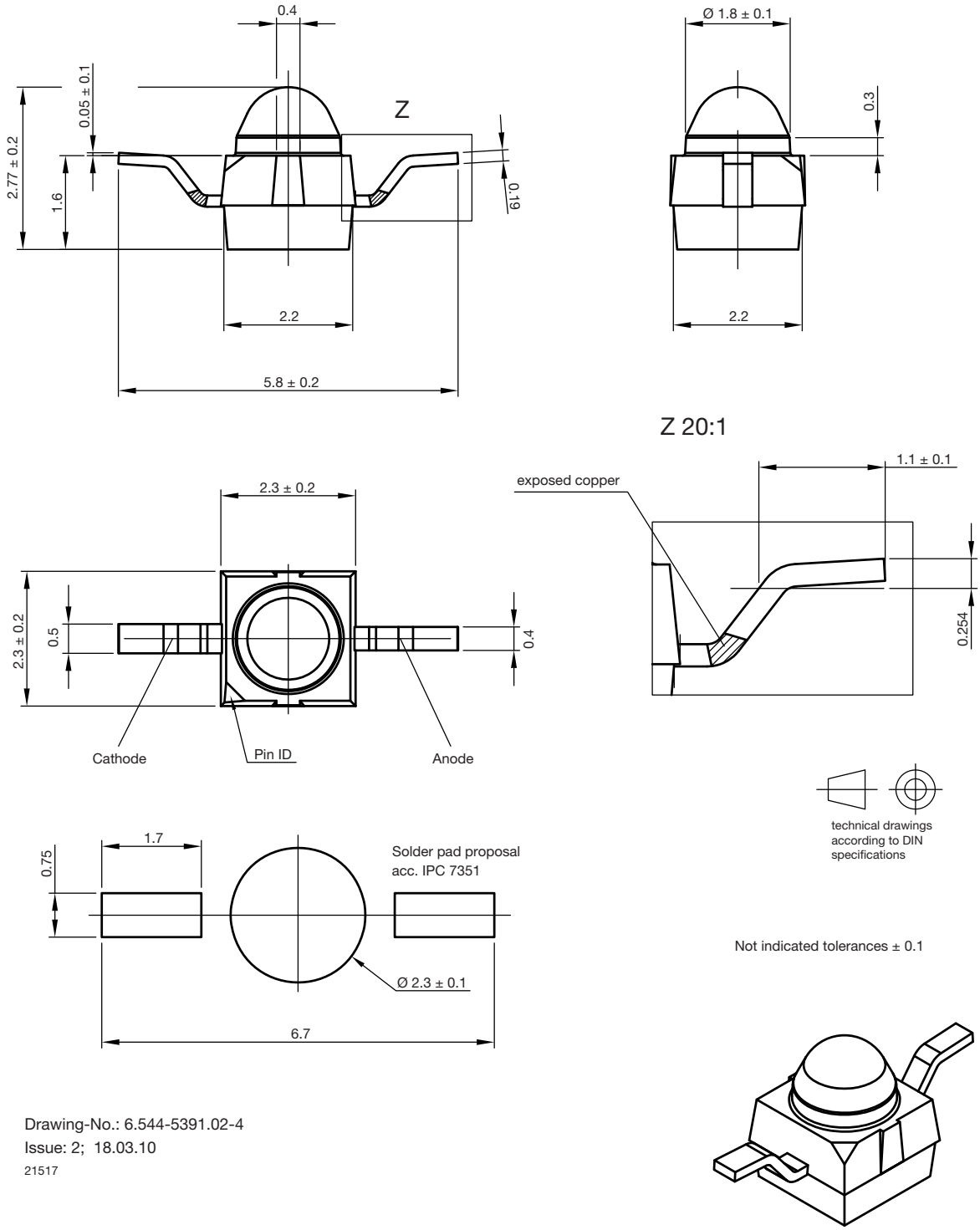

Drawing-No.: 6.544-5391.02-4
Issue: 2; 18.03.10
21517

For technical questions, contact: LED@vishay.com
THIS DOCUMENT IS SUBJECT TO CHANGE WITHOUT NOTICE. THE PRODUCTS DESCRIBED HEREIN AND THIS DOCUMENT ARE SUBJECT TO SPECIFIC DISCLAIMERS, SET FORTH AT www.vishay.com/doc?91000

TAPING AND REEL DIMENSIONS in millimeters: **VLD.1235G** (gullwing)

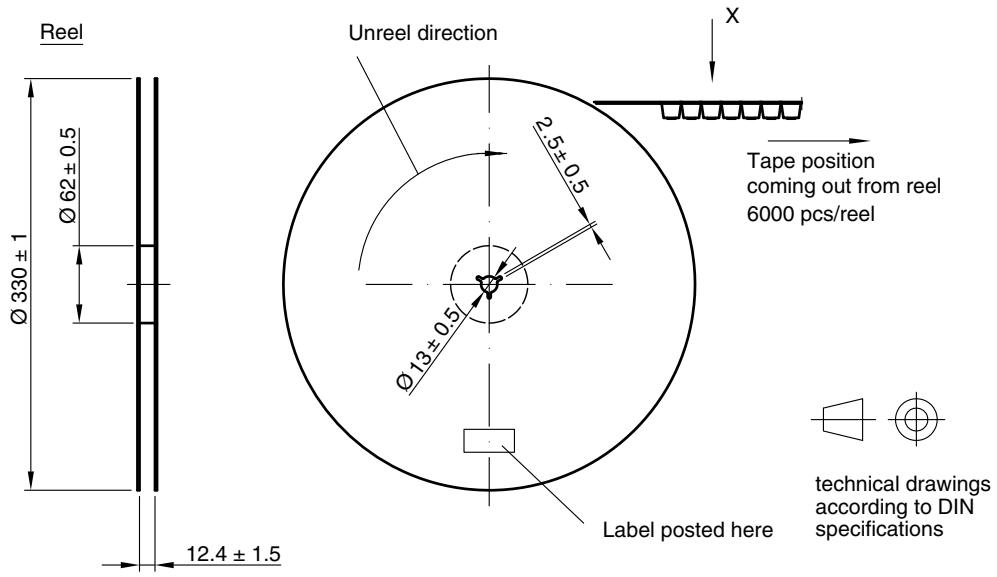

Leader and trailer tape:

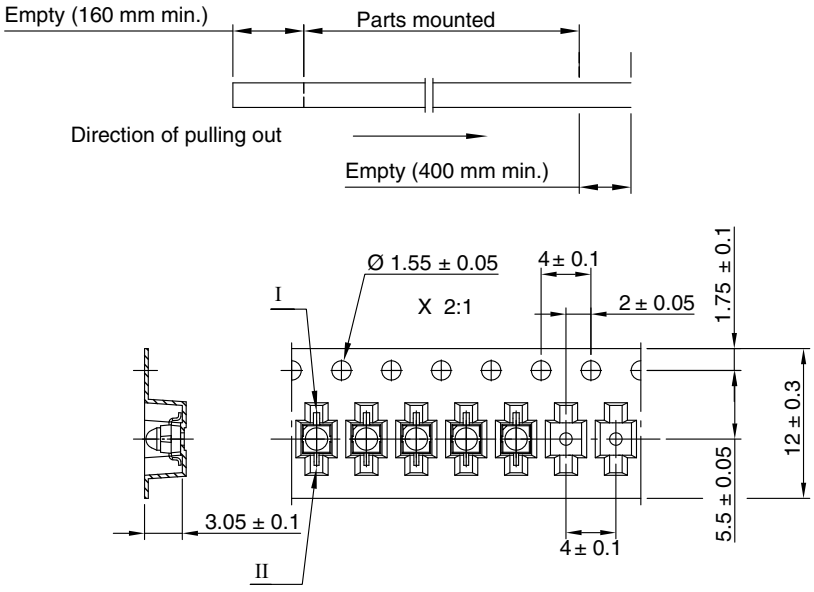

Drawing-No.: 9.800-5091.01-4
Issue: 3; 18.03.10

For technical questions, contact: LED@vishay.com
THIS DOCUMENT IS SUBJECT TO CHANGE WITHOUT NOTICE. THE PRODUCTS DESCRIBED HEREIN AND THIS DOCUMENT ARE SUBJECT TO SPECIFIC DISCLAIMERS, SET FORTH AT www.vishay.com/doc?91000

TAPING AND REEL DIMENSIONS in millimeters: **VLD.1235R** (reverse gullwing)

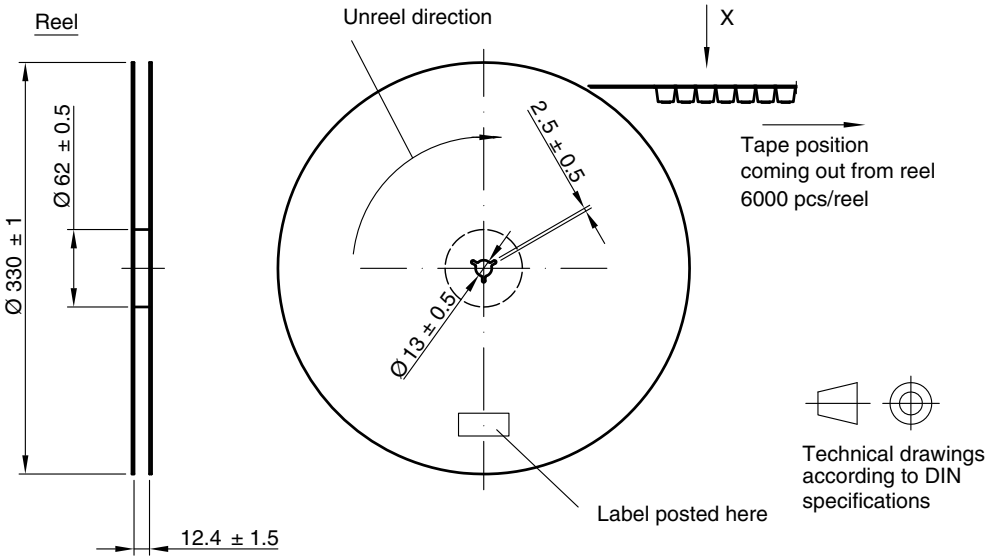

Leader and trailer tape:

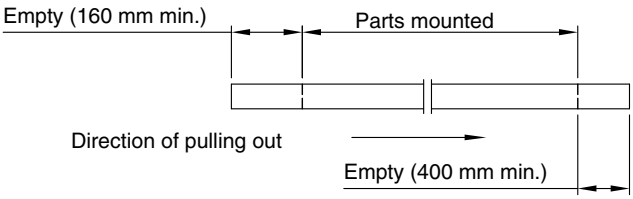

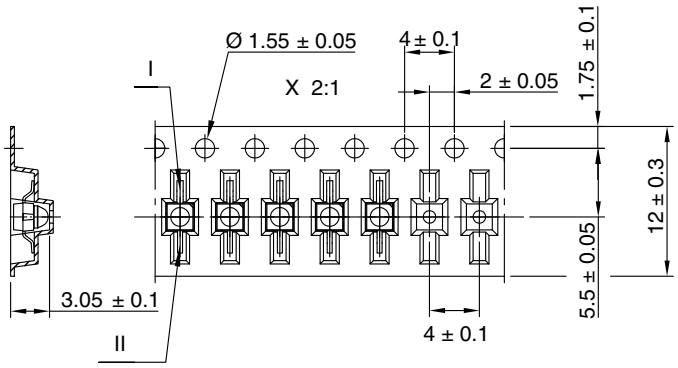

Drawing-No.: 9.800-5100.01-4
Issue: 2; 18.03.10

For technical questions, contact: LED@vishay.com
THIS DOCUMENT IS SUBJECT TO CHANGE WITHOUT NOTICE. THE PRODUCTS DESCRIBED HEREIN AND THIS DOCUMENT ARE SUBJECT TO SPECIFIC DISCLAIMERS, SET FORTH AT www.vishay.com/doc?91000

TAPING AND REEL DIMENSIONS in millimeters: **VLD.1235G-08** (gullwing)

Reel

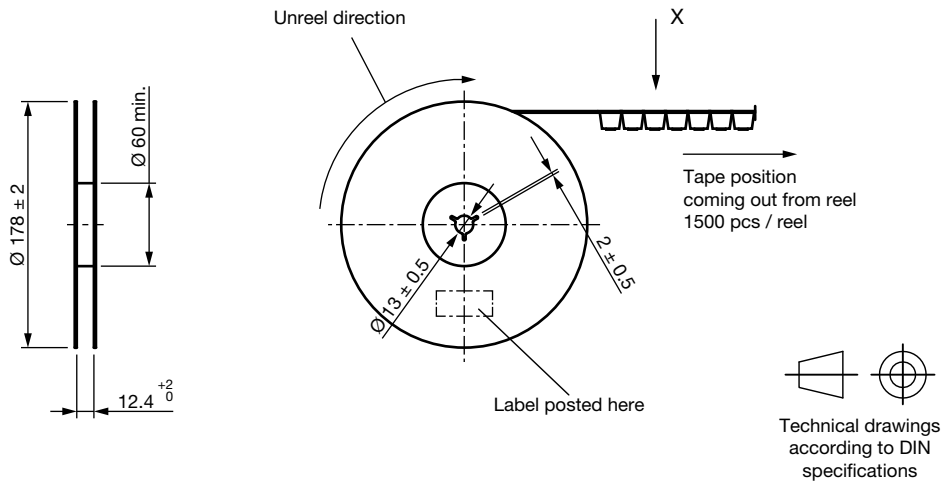

Leader and trailer tape

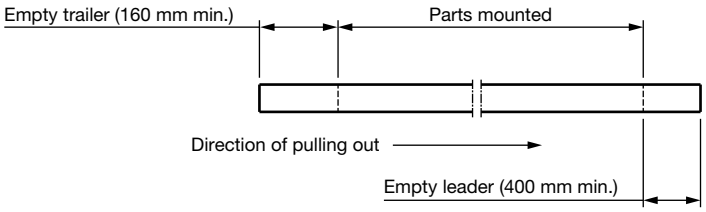

Terminal position in tape

Device	Lead I	Lead II
VLDY153.G...-08	Cathode	Anode
VLDK153.G...-08		
VLDR153.G...-08		
VLDS153.G...-08		

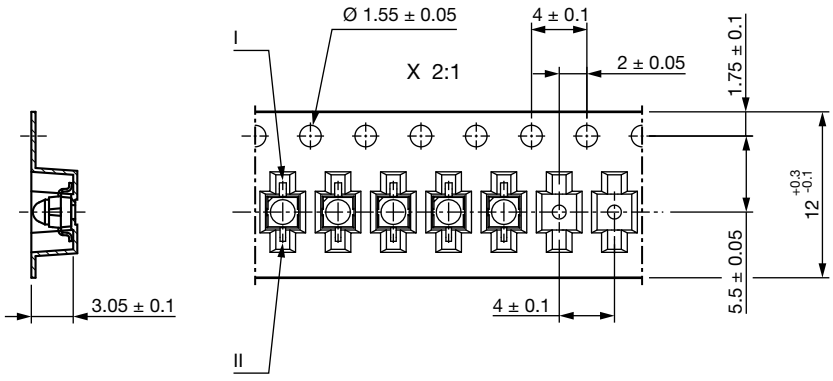

Drawing-No.: 9.800-5137.01-4
Issue: 1; 17.03.16

For technical questions, contact: LED@vishay.com
THIS DOCUMENT IS SUBJECT TO CHANGE WITHOUT NOTICE. THE PRODUCTS DESCRIBED HEREIN AND THIS DOCUMENT ARE SUBJECT TO SPECIFIC DISCLAIMERS, SET FORTH AT www.vishay.com/doc?91000

TAPING AND REEL DIMENSIONS in millimeters: VLD.1235R-08 (reverse gullwing)

Reel

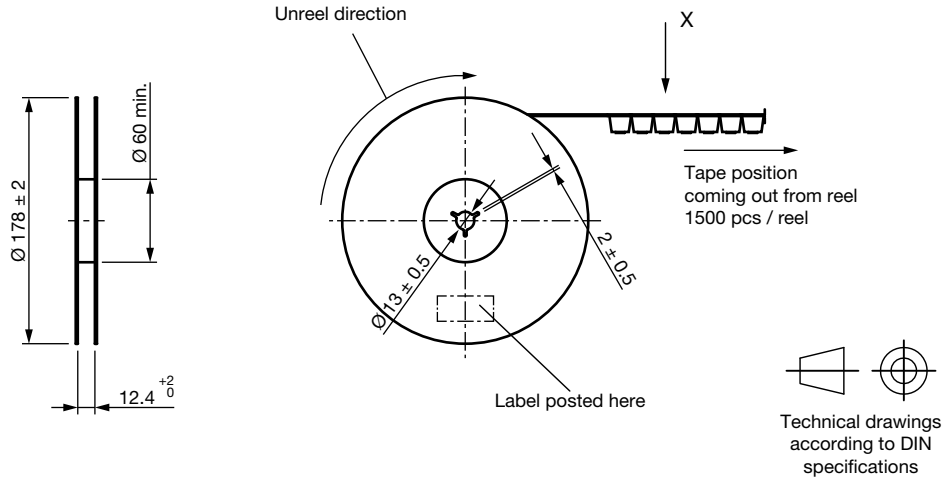

Leader and trailer tape

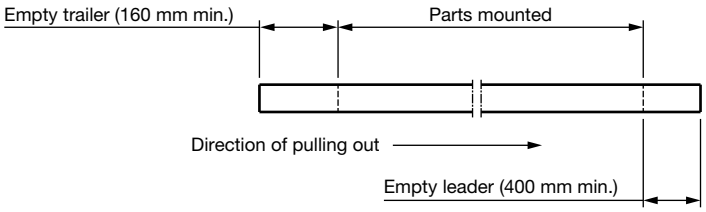

Terminal position in tape

Device	Lead I	Lead II
VLDY153.R...-08	Cathode	Anode
VLDK153.R...-08		
VLDR153.R...-08		
VLDS153.R...-08		

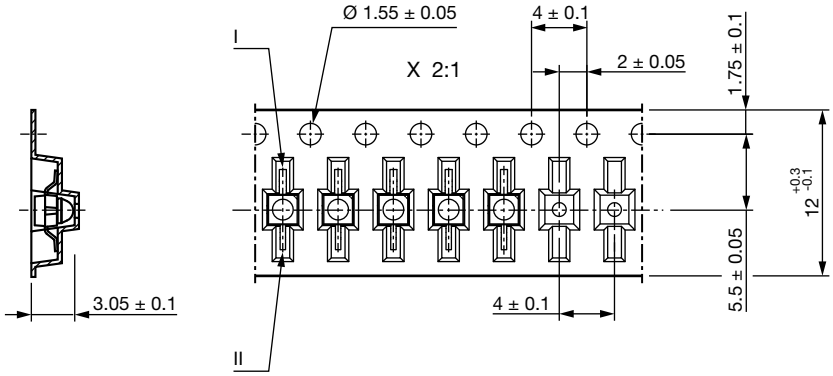

Drawing-No.: 9.800-5138.01-4
Issue: 1; 17.03.16

COVER TAPE PEEL STRENGTH

According to DIN EN 60286-3

0.1 N to 1.3 N

300 ± 10 mm/min

165° to 180° peel angle

LABEL

Standard bar code labels for finished goods

The standard bar code labels are product labels and used for identification of goods. The finished goods are packed in final packing area. The standard packing units are labeled with standard bar code labels before transported as finished goods to warehouses. The labels are on each packing unit and contain Vishay Semiconductor GmbH specific data.

For technical questions, contact: LED@vishay.com
THIS DOCUMENT IS SUBJECT TO CHANGE WITHOUT NOTICE. THE PRODUCTS DESCRIBED HEREIN AND THIS DOCUMENT ARE SUBJECT TO SPECIFIC DISCLAIMERS, SET FORTH AT www.vishay.com/doc?91000

SOLDERING PROFILE

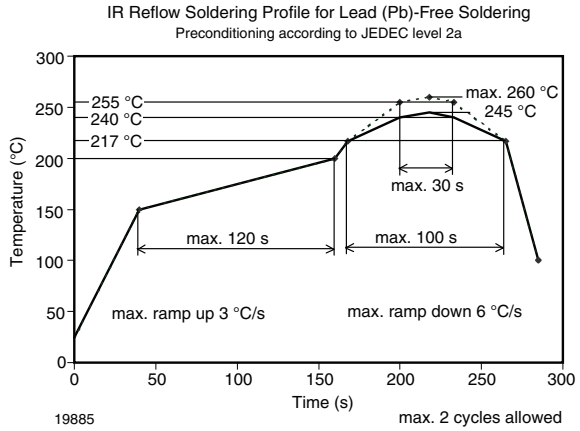

Fig. 10 - Vishay Lead (Pb)-free Reflow Soldering Profile (according to J-STD-020)

BAR CODE PRODUCT LABEL (example)



A. 2D barcode
B. PartNo = Vishay part number
C. QTY = Quantity
D. SelCode = selection code (binning)
E. PTC = Code of manufacturing plant
F. Batch = date code: year / week / plant code
G. Region code
H. SL = sales location
I. Terminations finishing
K. Lead (Pb)-free symbol
L. Halogen-free symbol
M. RoHS symbol

DRY PACKING

The reel is packed in an anti-humidity bag to protect the devices from absorbing moisture during transportation and storage.

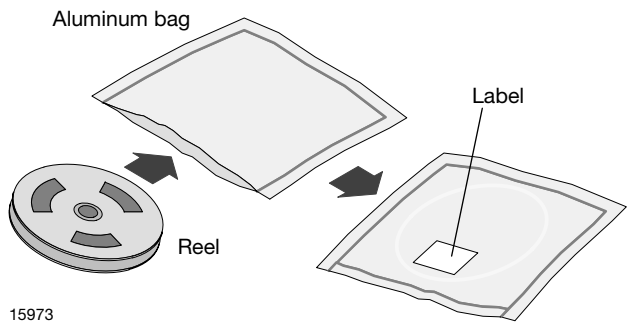

FINAL PACKING

The sealed reel is packed into a cardboard box. A secondary cardboard box is used for shipping purposes.

RECOMMENDED METHOD OF STORAGE

Dry box storage is recommended as soon as the aluminum bag has been opened to prevent moisture absorption. The following conditions should be observed, if dry boxes are not available:

- Storage temperature 10 °C to 30 °C
- Storage humidity ≤ 60 % RH max.

After more than 672 h under these conditions moisture content will be too high for reflow soldering.

In case of moisture absorption, the devices will recover to the former condition by drying under the following condition:

192 h at 40 °C + 5 °C / - 0 °C and < 5 % RH (dry air / nitrogen) or
96 h at 60 °C + 5 °C and < 5 % RH for all device containers or
24 h at 100 °C + 5 °C not suitable for reel or tubes.

An EIA JEDEC standard JESD22-A112 level 2a label is included on all dry bags.

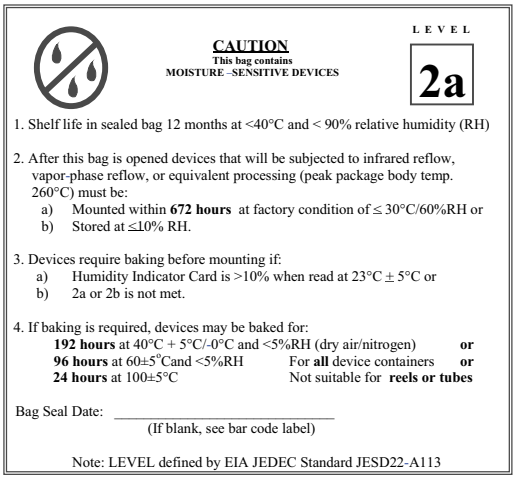

Example of JESD22-A112 level 2a label

ESD PRECAUTION

Proper storage and handling procedures should be followed to prevent ESD damage to the devices especially when they are removed from the antistatic shielding bag. Electrostatic sensitive devices warning labels are on the packaging.

VISHAY SEMICONDUCTORS STANDARD BAR CODE LABEL

The Vishay Semiconductors standard bar code labels are printed at final packing areas. The labels are on each packing unit and contain Vishay Semiconductors specific data.

For technical questions, contact: LED@vishay.com
THIS DOCUMENT IS SUBJECT TO CHANGE WITHOUT NOTICE. THE PRODUCTS DESCRIBED HEREIN AND THIS DOCUMENT ARE SUBJECT TO SPECIFIC DISCLAIMERS, SET FORTH AT www.vishay.com/doc?91000

Disclaimer

ALL PRODUCT, PRODUCT SPECIFICATIONS AND DATA ARE SUBJECT TO CHANGE WITHOUT NOTICE TO IMPROVE RELIABILITY, FUNCTION OR DESIGN OR OTHERWISE.

Vishay Intertechnology, Inc., its affiliates, agents, and employees, and all persons acting on its or their behalf (collectively, “Vishay”), disclaim any and all liability for any errors, inaccuracies or incompleteness contained in any datasheet or in any other disclosure relating to any product.

Vishay makes no warranty, representation or guarantee regarding the suitability of the products for any particular purpose or the continuing production of any product. To the maximum extent permitted by applicable law, Vishay disclaims (i) any and all liability arising out of the application or use of any product, (ii) any and all liability, including without limitation special, consequential or incidental damages, and (iii) any and all implied warranties, including warranties of fitness for particular purpose, non-infringement and merchantability.

Statements regarding the suitability of products for certain types of applications are based on Vishay's knowledge of typical requirements that are often placed on Vishay products in generic applications. Such statements are not binding statements about the suitability of products for a particular application. It is the customer's responsibility to validate that a particular product with the properties described in the product specification is suitable for use in a particular application. Parameters provided in datasheets and / or specifications may vary in different applications and performance may vary over time. All operating parameters, including typical parameters, must be validated for each customer application by the customer's technical experts. Product specifications do not expand or otherwise modify Vishay's terms and conditions of purchase, including but not limited to the warranty expressed therein.

Hyperlinks included in this datasheet may direct users to third-party websites. These links are provided as a convenience and for informational purposes only. Inclusion of these hyperlinks does not constitute an endorsement or an approval by Vishay of any of the products, services or opinions of the corporation, organization or individual associated with the third-party website. Vishay disclaims any and all liability and bears no responsibility for the accuracy, legality or content of the third-party website or for that of subsequent links.

Except as expressly indicated in writing, Vishay products are not designed for use in medical, life-saving, or life-sustaining applications or for any other application in which the failure of the Vishay product could result in personal injury or death. Customers using or selling Vishay products not expressly indicated for use in such applications do so at their own risk. Please contact authorized Vishay personnel to obtain written terms and conditions regarding products designed for such applications.

No license, express or implied, by estoppel or otherwise, to any intellectual property rights is granted by this document or by any conduct of Vishay. Product names and markings noted herein may be trademarks of their respective owners.

© 2024 VISHAY INTERTECHNOLOGY, INC. ALL RIGHTS RESERVED