GlobTek, Inc.
www.globtek.com
186 Veterans Drive,
Northvale, NJ 07647
Tel. (201) 784-1000
Fax (201) 784-0111

Drawing Title: GTM962252P22554-F, ICT / ITE / Medical Power Supply, Efficiency Level: USA DOE Level VI / Eco-design Directive 2009/125/EC, (EU) 2019/1782, Case Color/Style: GlobTek Black, Open Frame/Internal, Regulated Switchmode AC-DC Power Supply AC Adaptor, Input Rating: 100-240V~, 50-60 Hz, PCB Pins, , Output Rating: 225.00W, 54.0V@4.16A, Pin Out: Pins 1, 2, 3: DC COM Pins 4, 5, 6: +V, Output Configuration: mm, / Cond, , DC Output Connector JST B6P-VH or equivalent, Ferrite: None, N/A, GT Cord # C2093, Blades/Input Cord: (Order Separately), Approvals:	
Model No. GTM962252P22554-F	
Part No./Ordering No. GTM962252P22554-F	Rev A1

In Addition to GlobTek Inc.'s renewed ISO9001:2015 - Quality Management System Certification, GlobTek Inc. is now certified to:

ISO13485:2016 - Medical Devices Quality Management System Certification
ISO14001:2015 - Environmental Management System Certification

ISO Certificates are available online at https://www.globtek.com/iso-certificates/

The acceptance of this specification and use of the product described in this document indicates the acceptance and binding of the customer to Globtek TERMS AND CONDITIONS (attached to the end of this document), which supersede all other agreements, terms, and conditions (https://www.globtek.com/terms-and-conditions/).

The purchaser of this product (Customer) agrees that it is their sole responsibility to determine suitability/fitness of the product described in this specification for their application and to take precautions for protection against any hazards attendant to the handling and use of the product.

Footnote:

GlobTek Inc. will not be liable for the safety and performance of these power supplies/battery packs if unauthorized access and repair occurs. End user should consult applicable UL, CSA or EN standards for proper installation instruction.

Limitation of Use:

GlobTek products are intended for use with commercial, medical, and/or industrial equipment only. GlobTek product are not authorized for use as mission critical components in life support hazardous environment, nuclear or aircraft applications without prior written approval from the CEO of GlobTek Inc.
Contents of this document are subject to change without prior notice.

Customer Approval of Specification:

Please approve, sign and send back to GlobTek so we can complete order processing.
A delay in receipt of this form will delay delivery schedule.

Company Name:	Customer P/N:
Quote Number:	Date:
Authorized Representative Name:	Authorized Representative Signature:

PROPRIETARY INFORMATION
PROPRIETARY OF GLOBTEK, INC. ANY REPRODUCTION, DISCLOSURE OR USE OF THIS DRAWING, IN WHOLE OR IN PART, IS HEREBY PROHIBITED EXCEPT AS SPECIFIED IN WRITING BY GLOBTEK, INC. © GlobTek, Inc. 2020 - 2024
guest / 05/28/2024 10:24:14 AM GMT

REVISION HISTORY

REV	DESCRIPTION	SUB	DATE	APPROVED
A1	Correct model family	QA	12/22/2020	QA
A	Initial release	QA	10/16/2020	QA

POWER SUPPLY INFORMATION

TYPE	Open Frame/Internal
TECHNOLOGY	Regulated Switchmode AC-DC Power Supply AC Adaptor
CASE COLOR	GlobTek Black
NAMEPLATE RATED INPUT	100-240V~, 50-60 Hz, 3A
INPUT CONFIG	PCB Pins
WATTS	225.00
VOLTS OUT	54.0
CURRENT OUT (Amps)	4.16
BLADE/CORD INCLUDED	None (Order Separately)
BLADE/CORD INSTALLED	None :(Order Separately)
INGRESS PROTECTION	na
GROUNDING CONFIGURATION	(F2) Floating output, functional earth to center of pri-sec bridging capacitors
EFFICIENCY LEVEL	USA DOE Level VI / Eco-design Directive 2009/125/EC, (EU) 2019/1782
OUTPUT CONFIGURATION	mm, / Cond, , DC Output Connector JST B6P-VH or equivalent, Ferrite: None, N/A, GT Cord # C2093
OVERMOLDED	No
CONNECTOR PIN OUT	Pins 1, 2, 3: DC COM Pins 4, 5, 6: +V
LABEL SPECS	ISO 15223 medical device compliant label,L-1470
SPECIAL BARCODE LABEL MATERIAL	No
PACK SPEC	Standard, Cellular packaging
USER MANUAL	

PROPRIETARY INFORMATION

PROPRIETARY OF GLOBTEK, INC. ANY REPRODUCTION, DISCLOSURE OR USE OF THIS DRAWING, IN WHOLE OR IN PART, IS HEREBY PROHIBITED EXCEPT AS SPECIFIED IN WRITING BY GLOBTEK, INC. © GlobTek, Inc. 2020 - 2024

guest / 05/28/2024 10:24:14 AM GMT

GlobTek, Inc.
www.globtek.com
186 Veterans Drive,
Northvale, NJ 07647
Tel. (201) 784-1000
Fax (201) 784-0111

Drawing Title: GTM962252P22554-F, ICT / ITE / Medical Power Supply, Efficiency Level: USA DOE Level VI / Eco-design Directive 2009/125/EC, (EU) 2019/1782, Case Color/Style: GlobTek Black, Open Frame/Internal, Regulated Switchmode AC-DC Power Supply AC Adaptor, Input Rating: 100-240V~, 50-60 Hz, PCB Pins, , Output Rating: 225.00W, 54.0V@4.16A, Pin Out: Pins 1, 2, 3: DC COM Pins 4, 5, 6: +V, Output Configuration: mm, / Cond, , DC Output Connector JST B6P-VH or equivalent, Ferrite: None, N/A, GT Cord # C2093, Blades/Input Cord: (Order Separately), Approvals:	
Model No. GTM962252P22554-F	
Part No./Ordering No. GTM962252P22554-F	Rev A1

Notes/Modifications/Customizations (notes in this section supersede the values shown in the standard spec)

DIMENSIONS ARE IN MM UNLESS SPECIFIED OTHERWISE

PROPRIETARY INFORMATION

PROPRIETARY OF GLOBTEK, INC. ANY REPRODUCTION, DISCLOSURE OR USE OF THIS DRAWING, IN WHOLE OR IN PART, IS HEREBY PROHIBITED EXCEPT AS SPECIFIED IN WRITING BY GLOBTEK, INC. © GlobTek, Inc. 2020 - 2024

guest / 05/28/2024 10:24:14 AM GMT

ELECTRICAL SPECIFICATIONS

Features

- High power density 2" x 4" format (3" x 5" and 4.22" x 7" formats also available)
- 2" x 4" version available in L-frame and cage configurations
- Low conducted & radiated EMI: Class B without external filters, ferrites, or metal planes (all input configurations, into resistive load)
- Class I, Class II, or Class II with Functional Earth input configurations
- ITE/ICT and medical (2 x MOPP) certified
- Auxiliary +12V output

Input

Input Voltage:	Specified: 85-264VAC, Nameplate: 100-240VAC
Input Frequency:	Specified: 47-63Hz, Nameplate: 50-60Hz
Input Current:	2.75A typ. @ 85VAC, 1.0A typ. @ 230VAC (full load)
No Load Input Power:	<150mW
Inrush Current:	<75A @ 230VAC (cold start @ 25°C)
Efficiency:	90 - 95% typ. (full load)
Power Factor:	>0.95 @ 115VAC, >0.90 @ 230VAC, 225W output >0.90 @ 115VAC, >0.85 @ 230VAC, 100W output

PROPRIETARY INFORMATION

PROPRIETARY OF GLOBTEK, INC. ANY REPRODUCTION, DISCLOSURE OR USE OF THIS DRAWING, IN WHOLE OR IN PART, IS HEREBY PROHIBITED EXCEPT AS SPECIFIED IN WRITING BY GLOBTEK, INC. © GlobTek, Inc. 2020 - 2024

guest / 05/28/2024 10:24:14 AM GMT

Output

Output Power:	225W (10CFM forced air) 140W (natural convection) Ratings are inclusive of aux output power
Turn-on Delay:	< 1 second @ 85VAC
Output Voltage Tolerance:	± 2.0% (worst case, set point + load/line regulation)
Load Regulation:	± 0.5% (measured at connector)
Line Regulation:	± 0.2% (measured at connector)
Ripple:	1% pk-pk (using a 47µF low-ESR cap + 0.1µF ceramic capacitor, measured @ 20MHz BW)
Transient Response:	<5% deviation (with 25% load step), recovery to within 1% in 1ms
Startup Overshoot:	<5% (full load)
Hold-up Time:	10ms min. (full load)
Aux Output Voltage Regulation:	12V ± 2V (10V min. / 14V max.), for $0A \leq I_{Aux} \leq 1.2A$ Aux regulation guaranteed when main output power ≥ 15% of 225W rating (~34W). For main output power < 15%, aux output voltage may drop to < 50% of nominal rating, depending on aux output load. Please check with your system. For main output = 12V, aux output voltage is same as main output.
Aux Output Current:	1.2A (10CFM forced air) 0.8A (natural convection)
Output Indicator:	Green LED

Protections

Input Protection:	MOV transient suppressor, dual fuses (line + neutral)
Over-Voltage Protection:	110-130%, latched-off, cycle AC to reset
Over-Current Protection:	110-140%, auto-recovery
Short Circuit Protection:	Non-latched with auto-recovery
Over-Temperature Protection:	NTC temperature sensor embedded in transformer, trip between 115 - 120°, latched-off, cycle AC to reset (auto-recovery available as special option)

Environmental

MTBF:	1,500,000 hours @ 25°C ambient, full load (Telcordia SR-332, Issue 3)
Operating Temperature:	-20°C to 50°C (full output power), -25°C to 80°C (derated)
Storage Temperature:	-30°C to 85°C
Humidity:	0% to 95% relative humidity, non-condensing
Altitude:	5000m max.
Vibration:	Conforms to EN60068-2-6, ISO80601-2, EN1789

PROPRIETARY INFORMATION
PROPRIETARY OF GLOBTEK, INC. ANY REPRODUCTION, DISCLOSURE OR USE OF THIS DRAWING, IN WHOLE OR IN PART, IS HEREBY PROHIBITED EXCEPT AS SPECIFIED IN WRITING BY GLOBTEK, INC. © GlobTek, Inc. 2020 - 2024
guest / 05/28/2024 10:24:14 AM GMT

Safety

Dielectric Withstand Voltage:	4000VAC or 5656VDC from input to output 3000VAC or 4242VDC from input to earth
Touch Current:	3-conductor input - NC: <25µA, SFC: <200µA 2-conductor input - NC: <65µA, SFC: <140µA
Earth Leakage Current	3-conductor input: <200µA 2-conductor input: N/A
Means of Protection:	2 x MOPP
Primary-Secondary Bridging Capacitance:	Two IEC60384-14 certified Y1 capacitors in series

EMC

Applicable Standards:	Medical: EN60601-1-2, 4th edition Emissions: EN55032, EN 55011, EN61000-6-3, EN61000-6-4, CISPR11/CISPR22 Immunity: EN55024, EN61000-6-1, EN61000-6-2
Conducted Emissions:	Class B, FCC Part 15, Class B (with resistive load)
Radiated Emissions:	Class B, FCC Part 15, Class B (with resistive load)
Harmonic Current Voltage Distortion:	EN61000-3-2, Class A
Voltage Fluctuations/Flicker:	EN61000-3-3
Electrostatic Discharge (ESD) Immunity:	EN61000-4-2, 10KV contact discharge, 20KV air discharge (applied to input or output terminals)
Radiated RF Immunity:	EN61000-4-3, 20V/m 80-2700MHz, 80% 1KHz AM, 80% 5Hz AM
EFT/Burst Immunity:	EN61000-4-4, 4KV/100kHz.
Line Surge Immunity:	EN61000-4-5, 2KV differential, 4KV common-mode
Conducted RF Immunity:	EN61000-4-6, 3VRMS, (6VRMS in ISM/amateur bands), 80% 1KHz AM
Power Frequency Magnetic Field Immunity:	EN61000-4-8, 30A/m
Voltage Dip Immunity:	EN61000-4-11

Mechanical Formats

GTM962250P:	Open-frame No suffix: 2" x 4" style, 101.6*50.8*30.0mm, 170g -C suffix: 3" x 5" style, 127.0*64.8*30.0mm, 180g -D suffix: 4.22" x 7" style, 177.8*107.2*30.0mm, 190g
GTM962251P:	L-frame: 103.5*62.3*40.0mm, 230g
GTM962252P:	Cage: 103.5*62.3*40.0mm, 250g
Note 1:	The open-frame format meets the above EMC specifications as a standalone unit. However, an L-frame or cage version may help to further improve EMI performance, or to help address other system level electrical/mechanical requirements.

PROPRIETARY INFORMATION
PROPRIETARY OF GLOBTEK, INC. ANY REPRODUCTION, DISCLOSURE OR USE OF THIS DRAWING, IN WHOLE OR IN PART, IS HEREBY PROHIBITED EXCEPT AS SPECIFIED IN WRITING BY GLOBTEK, INC. © GlobTek, Inc. 2020 - 2024
guest / 05/28/2024 10:24:14 AM GMT

Input/Output Connectors

Earth Terminal (J0):	Connector on PCB: Kang Yang PCH250 (0.250" x 0.031" Faston) Recommended mate: TE Connectivity/AMP 2-520184-2 Note: Leave earth terminal disconnected for Class II input
Input Connector (J1):	Connector on PCB: JST B2P3-VH Pin 1: Line, Pin 2: Not used, Pin 3: Neutral Recommended mate: JST VAR-2 (housing), JST SVA-41T-P1.1 (terminals)
Main Output Connector (J2):	Connector on PCB: JST B6P-VH Pin 1: COM, Pin 2: COM, Pin 3: COM , Pin 4: +VOUT, Pin 5: +VOUT, Pin 6: +VOUT Recommended mate: JST VHR-6N (housing), JST SVH-21T-P1.1 (terminals)
Aux Output Connector (J3):	Connector on PCB: Molex 22-04-1021 Pin 1: COM, Pin 2: +FAN Recommended mate: Molex 22-01-1022 (housing), Molex 2759 (terminals)

Special Options

- Custom labels/markings
- Short term output surge capability
- Reduced touch current
- Reduced output ripple
- Compliance to IPC-600, IPC-610, IPC-6012 Class 2 or 3
- IEC61000-3-2 Class-C line harmonics for LED lighting applications
- Non-latching (auto-recover) over-temperature protection
- Potentiometer to adjust/trim output voltage
- Custom aux output voltages (5V to 12V), available for main output voltages from 12-24V

Fan Airflow

- For full 225W output power, the fan should provide at least 10CFM in the direction noted below.

PROPRIETARY INFORMATION

PROPRIETARY OF GLOBTEK, INC. ANY REPRODUCTION, DISCLOSURE OR USE OF THIS DRAWING, IN WHOLE OR IN PART, IS HEREBY PROHIBITED EXCEPT AS SPECIFIED IN WRITING BY GLOBTEK, INC. © GlobTek, Inc. 2020 - 2024

guest / 05/28/2024 10:24:14 AM GMT

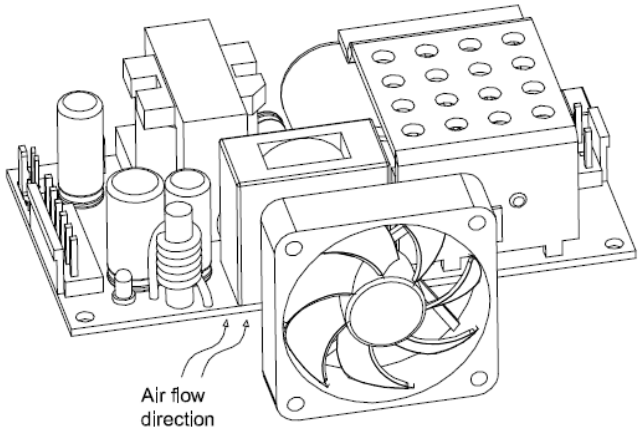

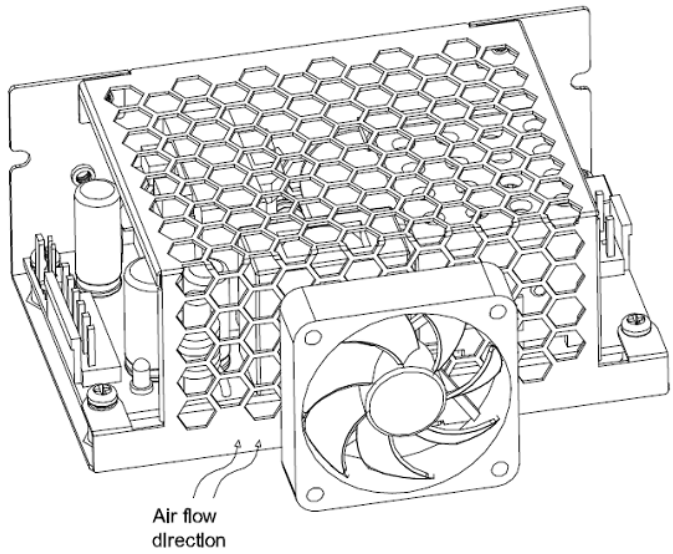

TO ADDRESS SYSTEM-LEVEL EMI CONCERNS, FERRITE CHOKES/BEADS MAY BE ADDED/REVISED UPON REQUEST. A SAMPLE KIT OF GLOBTEK'S STANDARD FERRITES IS AVAILABLE UNDER GLOBTEK P/N: EMI-MITIGATION-KIT1

FOR ADDITIONAL INFORMATION, PLEASE READ OUR WHITE PAPER AT: https://r.globtek.info/3QeaqtD

INGRESS PROTECTION: na

PROPRIETARY INFORMATION

PROPRIETARY OF GLOBTEK, INC. ANY REPRODUCTION, DISCLOSURE OR USE OF THIS DRAWING, IN WHOLE OR IN PART, IS HEREBY PROHIBITED EXCEPT AS SPECIFIED IN WRITING BY GLOBTEK, INC. © GlobTek, Inc. 2020 - 2024

guest / 05/28/2024 10:24:14 AM GMT

GlobTek, Inc.
www.globtek.com
186 Veterans Drive,
Northvale, NJ 07647
Tel. (201) 784-1000
Fax (201) 784-0111

Drawing Title: GTM962252P22554-F, ICT / ITE / Medical Power Supply, Efficiency Level: USA DOE Level VI / Eco-design Directive 2009/125/EC, (EU) 2019/1782, Case Color/Style: GlobTek Black, Open Frame/Internal, Regulated Switchmode AC-DC Power Supply AC Adaptor, Input Rating: 100-240V~, 50-60 Hz, PCB Pins, , Output Rating: 225.00W, 54.0V@4.16A, Pin Out: Pins 1, 2, 3: DC COM Pins 4, 5, 6: +V, Output Configuration: mm, / Cond, , DC Output Connector JST B6P-VH or equivalent, Ferrite: None, N/A, GT Cord # C2093, Blades/Input Cord: (Order Separately), Approvals:	
Model No. GTM962252P22554-F	
Part No./Ordering No. GTM962252P22554-F	Rev A1

3D File Download https://www.globtek.com/dl/GTM962252PWWWVVX-XF.igs

Mechanical drawing

PROPRIETARY INFORMATION
PROPRIETARY OF GLOBTEK, INC. ANY REPRODUCTION, DISCLOSURE OR USE OF THIS DRAWING, IN WHOLE OR IN PART, IS HEREBY PROHIBITED EXCEPT AS SPECIFIED IN WRITING BY GLOBTEK, INC. © GlobTek, Inc. 2020 - 2024
guest / 05/28/2024 10:24:14 AM GMT

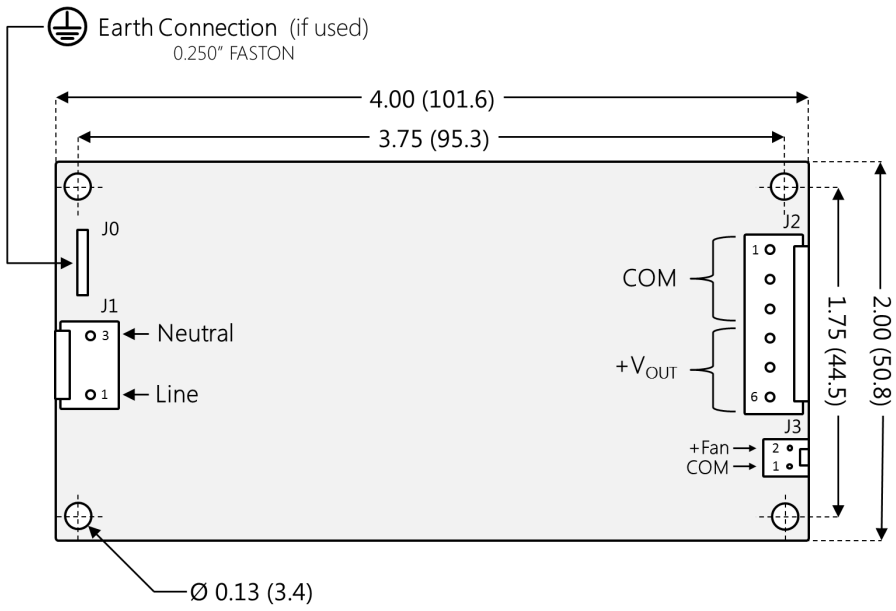

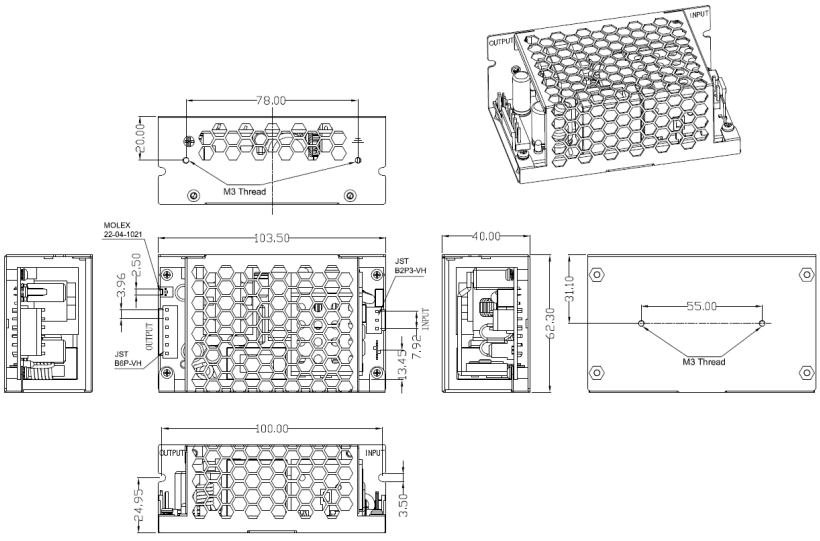

Customer may need to provide EMI shielding if not in metal chassis

Dimensions for larger alternate 3x5 product are below

PROPRIETARY INFORMATION

PROPRIETARY OF GLOBTEK, INC. ANY REPRODUCTION, DISCLOSURE OR USE OF THIS DRAWING, IN WHOLE OR IN PART, IS HEREBY PROHIBITED EXCEPT AS SPECIFIED IN WRITING BY GLOBTEK, INC. © GlobTek, Inc. 2020 - 2024

guest / 05/28/2024 10:24:14 AM GMT

DERATING CURVE

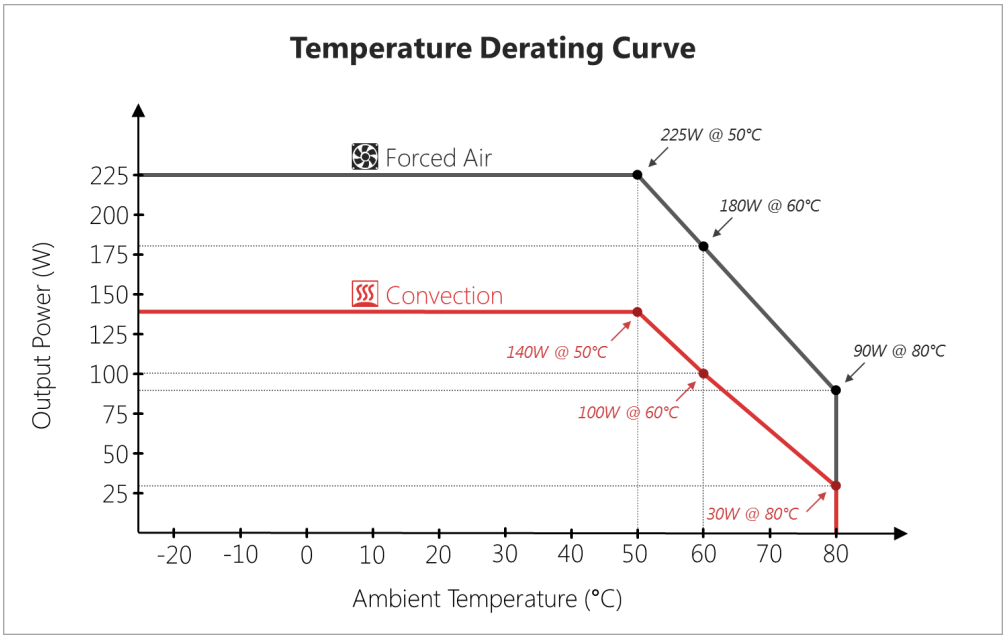

PROPRIETARY INFORMATION

PROPRIETARY OF GLOBTEK, INC. ANY REPRODUCTION, DISCLOSURE OR USE OF THIS DRAWING, IN WHOLE OR IN PART, IS HEREBY PROHIBITED EXCEPT AS SPECIFIED IN WRITING BY GLOBTEK, INC. © GlobTek, Inc. 2020 - 2024

guest / 05/28/2024 10:24:14 AM GMT

INPUT CONFIGURATION

(F2) Floating output, functional earth to center of pri-sec bridging capacitors

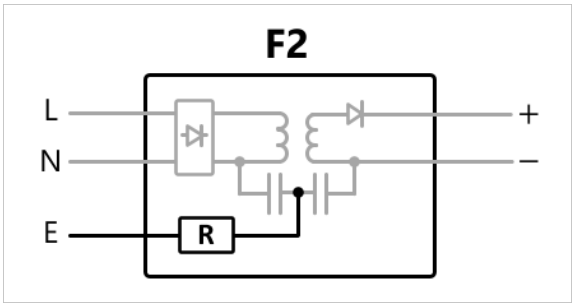

Alternate grounding configurations available upon request.

Blades/Cord Included:None:(Order Separately)

Blades/Cord Installed:None:(Order Separately)

JST B2P3-VH



Optional Input Wiring Kits are available:

PN/Ordering No	Length	End A	End B
C810070M6VAR2(R)	60	IEC 60320 C8	JST VAR-2
C1410070M6VAR2(R)	60	IEC 60320 C13	JST VAR-2
VAR2210070M7VAR2(R)	73	JST VAR-2	JST VAR-2

Custom lengths, construction, cable types, ferrites, filters, and termination available upon request.

PROPRIETARY INFORMATION

PROPRIETARY OF GLOBTEK, INC. ANY REPRODUCTION, DISCLOSURE OR USE OF THIS DRAWING, IN WHOLE OR IN PART, IS HEREBY PROHIBITED EXCEPT AS SPECIFIED IN WRITING BY GLOBTEK, INC. © GlobTek, Inc. 2020 - 2024

guest / 05/28/2024 10:24:14 AM GMT

OUTPUT CORD AND CONNECTOR: B6P-VH/C2093

ACTUAL CONNECTORS, OVERMOLDS, FERRITES MAY VARY SLIGHTLY FROM THE PICTURE BELOW

CABLE TYPE	
CABLE LENGTH (mm)	
CABLE TOLERANCE (mm)	
WIRE GAUGE (AWG)	
CONDUCTORS	
HANK DIMENSION (mm)	
CABLE / CONNECTOR OVERMOLD COLOR	N/A
FERRITE TYPE AND DIMENSION	None
FERRITE NUMBER OF TURNS(Definition)	N/A
FERRITE DIMENSION FROM STRAIN RELIEF	N/A
FERRITE DIMENSION FROM PLUG	N/A
PLUG TYPE	DC Output Connector JST B6P-VH or equivalent
OVERMOLDED	No
OVER MOLD ORIENTATION	Straight
CONNECTOR PIN OUT	Pins 1, 2, 3: DC COM Pins 4, 5, 6: +V



Optional Output Wiring Kits are available:

PN/Ordering No	Length	End A	End B
VHR621007160M7VHR6(R)	73	VHR-6N	VHR-6N

Custom lengths, construction, cable types, ferrites, filters, and termination available upon request.

ADDITIONAL OUTPUT PLUG OPTIONS ARE AVAILABLE AT https://www.globtek.com/en/connectors
STANDARD PLUGS AND CONNECTORS CAN BE SEEN ONLINE AT https://www.globtek.com/en/connectors
CALCULATE VOLTAGE REGULATION/DROP WITH OUR ONLINE CALCULATOR: https://www.globtek.com/r2/PtqjjL

PROPRIETARY INFORMATION
PROPRIETARY OF GLOBTEK, INC. ANY REPRODUCTION, DISCLOSURE OR USE OF THIS DRAWING, IN WHOLE OR IN PART, IS HEREBY PROHIBITED EXCEPT AS SPECIFIED IN WRITING BY GLOBTEK, INC. © GlobTek, Inc. 2020 - 2024
guest / 05/28/2024 10:24:14 AM GMT

OUTPUT CONNECTOR HOOK UP

TO ADDRESS SYSTEM-LEVEL EMI CONCERNS, FERRITE CHOKES/BEADS MAY BE ADDED/REVISED UPON REQUEST. A SAMPLE KIT OF GLOBTEK'S STANDARD FERRITES IS AVAILABLE UNDER GLOBTEK P/N: EMI-MITIGATION-KIT1

FOR ADDITIONAL INFORMATION, PLEASE READ OUR WHITE PAPER AT:
https://www.globtek.com/en/technical-articles/ferrite-kit-radiated-emi-suppression-kit-for-globtek-power-supplies-cable-assemblies

PROPRIETARY INFORMATION
PROPRIETARY OF GLOBTEK, INC. ANY REPRODUCTION, DISCLOSURE OR USE OF THIS DRAWING, IN WHOLE OR IN PART, IS HEREBY PROHIBITED EXCEPT AS SPECIFIED IN WRITING BY GLOBTEK, INC. © GlobTek, Inc. 2020 - 2024
guest / 05/28/2024 10:24:14 AM GMT

LABEL:L-1470

LABEL P/N	ISO 15223 medical device compliant label
MATERIAL	Flat Thermal Transfer, Imprintable, Polyester Label and/or Pad Printed and/or Molded, and/or Laser Engraved in the case
BACKGROUND COLOR	Black if housing is Black, White or Silver if housing is White or Gray.
TEXT COLOR	White or Silver if label is Black Background for Black housing. Black if label is White or Silver background and Housing is White or Gray.
LABEL WIDTH (mm)	TBD
LABEL HEIGHT (mm)	TBD
SPECIAL BARCODE LABEL MATERIAL	No

Below is the minimum information which will appear on the label. NOTE: in the logo area additional/actual positioning of symbols and text is subjected to change as per agency updates/requirements or additional model approvals become available.
Agency logos may be in Regulatory Certifications/Label Markings area on the label or molded into the case housing outside the label area. Information will be shown via Label and/or Pad Printed and/or Molded in the case.

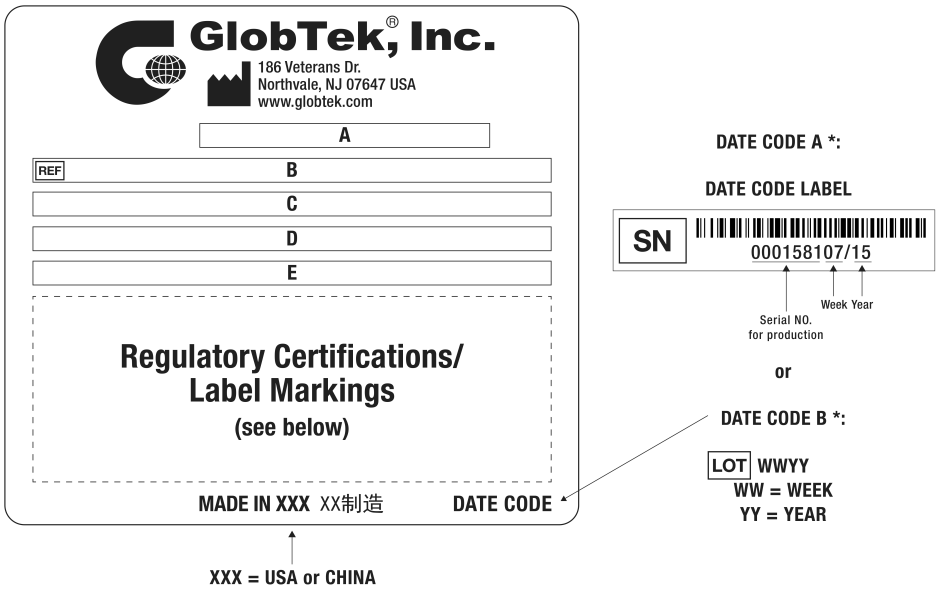

A=ICT / ITE / Medical Power Supply
B=P/N: (料号) GTM962252P22554-F
C=Model (型号) GTM962252P22554-F
D=Input (输入)100-240V~, 50-60 Hz, 3A
E=Output (输出)54.0 V ⎓ 4.16 A, 225.00W

PROPRIETARY INFORMATION
PROPRIETARY OF GLOBTEK, INC. ANY REPRODUCTION, DISCLOSURE OR USE OF THIS DRAWING, IN WHOLE OR IN PART, IS HEREBY PROHIBITED EXCEPT AS SPECIFIED IN WRITING BY GLOBTEK, INC. © GlobTek, Inc. 2020 - 2024
guest / 05/28/2024 10:24:14 AM GMT

AGENCY ONLINE DOCUMENTS	http://www.globtek.info/certs/GTM96225xP%20/
CE EC-Declaration for Medical	https://cs.globtek.info/ec_declaration_product?id=01t3a000005CNAR&m=1
CE EC-Declaration for Industrial/Commercial/ITE	https://cs.globtek.info/ec_declaration_product?id=01t3a000005CNAR&i=2
CE EC-Declaration for Household	Contact GlobTek for more information
UKCA-Declaration for Medical	https://cs.globtek.info/ukca_declaration_product?id=01t3a000005CNAR&m=1
UKCA-Declaration for Industrial/Commercial/ITE	https://cs.globtek.info/ukca_declaration_product?id=01t3a000005CNAR&i=2
UKCA-Declaration for Household	Contact GlobTek for more information
Morocco SDoC Declaration	https://cs.globtek.info/Morocco_SDoC_Declaration?id=a0O3a00000M4jYYEAZ
RoHS/RoHS3 Declaration	https://www.globtek.com/pdf/rohs_cert/01t3a000005CNARAA4
REACH Declaration	https://www.globtek.com/pdf/iso_certificates/REACH.pdf
Conflict Minerals Declaration	https://www.globtek.com/pdf/conflict-minerals.pdf
Prop 65 Statement	https://www.globtek.com/prop-65-statement.pdf

IPXY rating is based on 3rd party testing and customers should check suitability and test system level IPXY rating before ordering.

Regulatory Certifications/Label Markings

Below follows a link to the latest regulatory certifications and marks for this specific product. National standards as well as certification schemes are constantly changing and so is the set of certification marks and symbols applicable to this product. Various standards, marks and symbols, and certificates are subject to change at any time without notice.

Additional standards or unique country certifications are available upon request. Please contact Globtek to request a quotation.

LATEST PRODUCT/MODEL CERTIFICATIONS:	https://www.globtek.com/ds/2BKqNN3BWiL/bCjGHk2DZK3.html
AGENCY ONLINE DOCUMENTS	http://www.globtek.info/certs/GTM96225xP%20/



(F2) Floating output, functional earth to center of pri-sec bridging capacitors

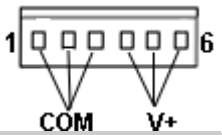

Pins 1, 2, 3: DC COM
Pins 4, 5, 6: +V

PROPRIETARY OF GLOBTEK, INC. ANY REPRODUCTION, DISCLOSURE OR USE OF THIS DRAWING, IN WHOLE OR IN PART, IS HEREBY PROHIBITED EXCEPT AS SPECIFIED IN WRITING BY GLOBTEK, INC. © GlobTek, Inc. 2020 - 2024
guest / 05/28/2024 10:24:14 AM GMT

PACKAGING

Packing Spec P/N	Standard, Cellular packaging
Box Qty	48
Gift Box Size (mm)	Cellular Packag
Gift Box Color	None
Master Carton Size (mm)	330 x 442 x 275
Master Carton Cubic Volume (m^3)	0.04
Master GW (Kg)	8.7 kg
BLADES INCLUDED	None: (Order Separately)
BLADE/CORD INSTALLED	None: (Order Separately)
USER MANUAL*	
USER MANUAL WEB LINK	

* This specification sheet is considered the user manual for all applications. It is expected that the buyer of this product will use it to formulate their own user manual for their end product and a user manual specifically for the power adapter is not usually required. If a user manual is not specifically listed above then none will be provided with this unit.

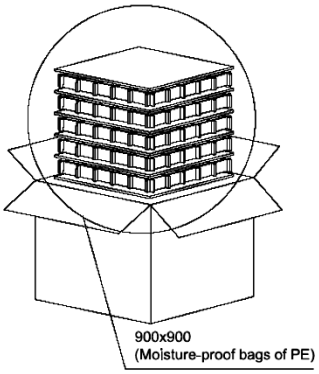

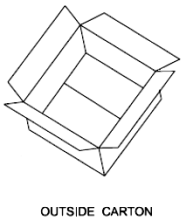

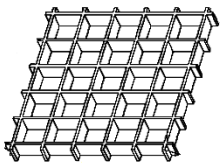



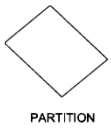

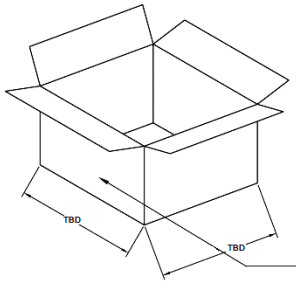

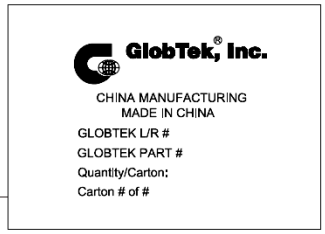

PROPRIETARY INFORMATION

PROPRIETARY OF GLOBTEK, INC. ANY REPRODUCTION, DISCLOSURE OR USE OF THIS DRAWING, IN WHOLE OR IN PART, IS HEREBY PROHIBITED EXCEPT AS SPECIFIED IN WRITING BY GLOBTEK, INC. © GlobTek, Inc. 2020 - 2024

guest / 05/28/2024 10:24:14 AM GMT

INSTRUCTIONS TO THE OEM SYSTEMS ENGINEER

It is the responsibility of the OEM systems engineer to provide the end system user instructions and warnings for the use of this product in the end system.

If an input cord is required for this product, AC Mains voltage should be provided to the power supply by a power supply cord approved to the national standards of the country in which it will be used.

This product is not designed to be repaired. No serviceable parts inside. A blown internal fuse is an indication of catastrophic failure of circuit component(s). If a Failure Analysis is required for a failed power supply/battery charger, please return the damaged unit to GlobTek for an accurate determination of the root cause of the failure.

EMC Compliance of the complete OEM product, including the GlobTek power supply/battery charger needs to be verified by the OEM systems engineer.

PROPRIETARY INFORMATION

PROPRIETARY OF GLOBTEK, INC. ANY REPRODUCTION, DISCLOSURE OR USE OF THIS DRAWING, IN WHOLE OR IN PART, IS HEREBY PROHIBITED EXCEPT AS SPECIFIED IN WRITING BY GLOBTEK, INC. © GlobTek, Inc. 2020 - 2024

guest / 05/28/2024 10:24:14 AM GMT

GlobTek, Inc.
www.globtek.com
186 Veterans Drive,
Northvale, NJ 07647
Tel. (201) 784-1000
Fax (201) 784-0111

Drawing Title: GTM962252P22554-F, ICT / ITE / Medical Power Supply, Efficiency Level: USA DOE Level VI / Eco-design Directive 2009/125/EC, (EU) 2019/1782, Case Color/Style: GlobTek Black, Open Frame/Internal, Regulated Switchmode AC-DC Power Supply AC Adaptor, Input Rating: 100-240V~, 50-60 Hz, PCB Pins, , Output Rating: 225.00W, 54.0V@4.16A, Pin Out: Pins 1, 2, 3: DC COM Pins 4, 5, 6: +V, Output Configuration: mm, / Cond, , DC Output Connector JST B6P-VH or equivalent, Ferrite: None, N/A, GT Cord # C2093, Blades/Input Cord: (Order Separately), Approvals:	
Model No. GTM962252P22554-F	
Part No./Ordering No. GTM962252P22554-F	Rev A1

INSTRUCTION SHEET

N/A

PROPRIETARY INFORMATION
PROPRIETARY OF GLOBTEK, INC. ANY REPRODUCTION, DISCLOSURE OR USE OF THIS DRAWING, IN WHOLE OR IN PART, IS HEREBY PROHIBITED EXCEPT AS SPECIFIED IN WRITING BY GLOBTEK, INC. © GlobTek, Inc. 2020 - 2024
guest / 05/28/2024 10:24:14 AM GMT

GlobTek, Inc.
www.globtek.com
186 Veterans Drive,
Northvale, NJ 07647
Tel. (201) 784-1000
Fax (201) 784-0111

Drawing Title: GTM962252P22554-F, ICT / ITE / Medical Power Supply, Efficiency Level: USA DOE Level VI / Eco-design Directive 2009/125/EC, (EU) 2019/1782, Case Color/Style: GlobTek Black, Open Frame/Internal, Regulated Switchmode AC-DC Power Supply AC Adaptor, Input Rating: 100-240V~, 50-60 Hz, PCB Pins, , Output Rating: 225.00W, 54.0V@4.16A, Pin Out: Pins 1, 2, 3: DC COM Pins 4, 5, 6: +V, Output Configuration: mm, / Cond, , DC Output Connector JST B6P-VH or equivalent, Ferrite: None, N/A, GT Cord # C2093, Blades/Input Cord: (Order Separately), Approvals:	
Model No. GTM962252P22554-F	
Part No./Ordering No. GTM962252P22554-F	Rev A1

PROPRIETARY INFORMATION
PROPRIETARY OF GLOBTEK, INC. ANY REPRODUCTION, DISCLOSURE OR USE OF THIS DRAWING, IN WHOLE OR IN PART, IS HEREBY PROHIBITED EXCEPT AS SPECIFIED IN WRITING BY GLOBTEK, INC. © GlobTek, Inc. 2020 - 2024
guest / 05/28/2024 10:24:14 AM GMT