HC-STA-D25-CHWS-1TTP16-EL-AL - Housing

1424389

https://www.phoenixcontact.com/us/products/1424389

Please be informed that the data shown in this PDF document is generated from our online catalog. Please find the complete data in the user documentation. Our general terms of use for downloads are valid.



Coupling housings D25, with single locking latch, material: Die-cast aluminum, salt water resistant, cable outlets: 1, straight, 1x Pg16, height: 68 mm, cable gland: none, Standard

Commercial data

Item number	1424389
Packing unit	1 pc
Minimum order quantity	1 pc
Sales key	BF56
Product key	BF7APE
Catalog page	Page 531 (C-2-2019)
GTIN	4055626371290
Weight per piece (including packing)	182.2 g
Weight per piece (excluding packing)	182 g
Customs tariff number	85389099
Country of origin	CN

Technical data

Notes

General	For contact inserts HC-D25, A16

Product properties

Product type	Housing with locking latch
Housing type	Coupling housings
Product family	HC-STA-D
Application	Standard
Type	D25
No. of cable outlets	1
Type of the screw connection	1x Pg16
Cable outlet	straight
Pg screw connection	none

Dimensions

Dimensional drawing	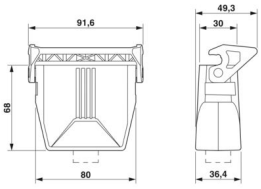
Width	30 mm
Height	68 mm
Length	80 mm

Material specifications

Flammability rating according to UL 94	V0 (Interlock)
Housing material	Die-cast aluminum, salt water resistant
Housing surface material	uncoated
Locking latch material	PA

Mechanical properties

Mechanical data

Type of the screw connection	1x Pg16
Locking type	Latch

Environmental and real-life conditions

Ambient conditions

Degree of protection	IP66
	IP67
Impact strength	IK08

Ambient temperature (operation)	-40 °C ... 125 °C

Drawings

Dimensional drawing

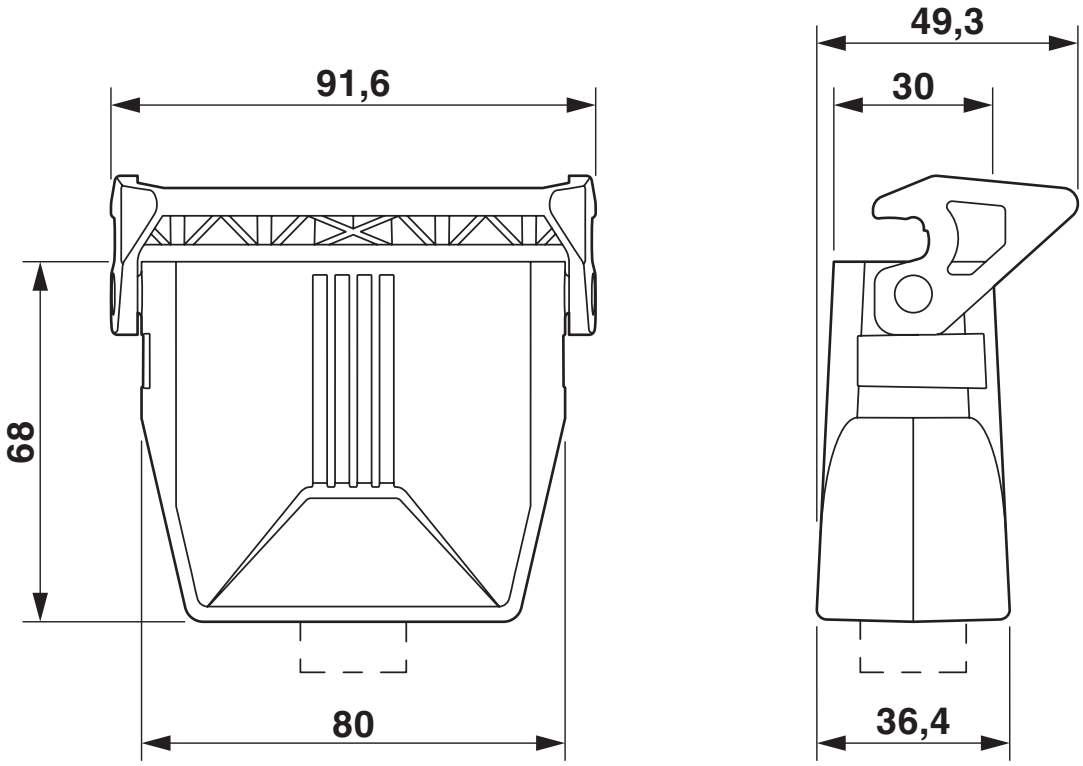

Dimensional drawing

Approvals

To download certificates, visit the product detail page: https://www.phoenixcontact.com/us/products/1424389

DNV
Approval ID: TAE000037S

cUL Recognized
Approval ID: E255026

UL Recognized
Approval ID: E255026

EAC
Approval ID: RU C-DE.BL08.B.00511

cULus Recognized

Classifications

ECLASS

ECLASS-11.0	27440202
ECLASS-12.0	27440202
ECLASS-13.0	27440202

ETIM

ETIM 9.0	EC000437

UNSPSC

UNSPSC 21.0	31261500

Environmental product compliance

EU RoHS

Fulfills EU RoHS substance requirements	Yes, No exemptions

China RoHS

Environment friendly use period (EFUP)	EFUP-E
	No hazardous substances above the limits

EU REACH SVHC

REACH candidate substance (CAS No.)	No substance above 0.1 wt%

Accessories

G-INS-PG16-S68N-NNES-S - Cable gland

1411174

https://www.phoenixcontact.com/us/products/1411174



Cable gland, material for screw connection: Brass, nickel-plated, application: Standard, external cable diameter 10 mm ... 14 mm, shielding: no, connecting thread: Pg16, color: silver, with O-ring

G-INSEC-PG16-S68N-NNES-S - Cable gland

1411199

https://www.phoenixcontact.com/us/products/1411199



Cable gland, material for screw connection: Brass, nickel-plated, application: EMC, external cable diameter 10 mm ... 14 mm, shielding: yes, connecting thread: Pg16, color: silver, with O-ring

HC-D25-BCFS-PR-BK - Protective cover

1346522

https://www.phoenixcontact.com/us/products/1346522



Protective cover D25, for single locking latch, protective cover material: PC, height: 19 mm, seal: yes

WP-G HF IP66 PG16 BK - Screw connection

3240891

https://www.phoenixcontact.com/us/products/3240891



Cable gland, Pg thread, IP66 protection, straight

WP-G HF IP69K PG16 BK - Screw connection

3240877

https://www.phoenixcontact.com/us/products/3240877



Cable gland, Pg thread, IP68/69k protection, straight

WP-GA HF IP66 PG16 BK - Screw connection

3240919

https://www.phoenixcontact.com/us/products/3240919



Cable gland, Pg thread, IP66 protection, angled

WP-GA HF IP69K PG16 BK - Screw connection

3240905

https://www.phoenixcontact.com/us/products/3240905

Cable gland, Pg thread, IP68/69k protection, angled



WP-GR HF IP66 PG16 BK - Screw connection

3240947

https://www.phoenixcontact.com/us/products/3240947

Cable gland, Pg thread, IP66 protection, with strain relief



WP-GR HF IP69K PG16 BK - Screw connection

3240933

https://www.phoenixcontact.com/us/products/3240933



Cable gland, Pg thread, IP68/69k protection, with strain relief

WP-G PP HF PG16 - Screw connection

3240991

https://www.phoenixcontact.com/us/products/3240991



Cable gland made from PP with Pg thread, IP65 protection

WP-GT PP HF PG16 - Screw connection

3241005

https://www.phoenixcontact.com/us/products/3241005



Cable gland made from PP with Pg thread, rotatable, IP54 protection

WP-G BRASS IP40 PG16 - Screw connection

3241040

https://www.phoenixcontact.com/us/products/3241040



Cable gland made from brass with Pg thread, IP40 protection

WP-GT BRASS PG16 - Screw connection

3241026

https://www.phoenixcontact.com/us/products/3241026



Cable gland made from brass with Pg thread, rotatable, IP40 protection

WP-G BRASS IP65 PG16 - Screw connection

3241054

https://www.phoenixcontact.com/us/products/3241054



Cable gland made from brass with Pg thread, IP65 protection

Phoenix Contact 2024 © - all rights reserved
https://www.phoenixcontact.com

Phoenix Contact USA
586 Fulling Mill Road
Middletown, PA 17057, United States
(+717) 944-1300
info@phoenixcon.com