Jun.1.2024 Copyright 2024 HIROSE ELECTRIC CO., LTD. All Rights Reserved.
In case of consideration for using Automotive equipment / device which demand high reliability, kindly contact our sales window correspondents.

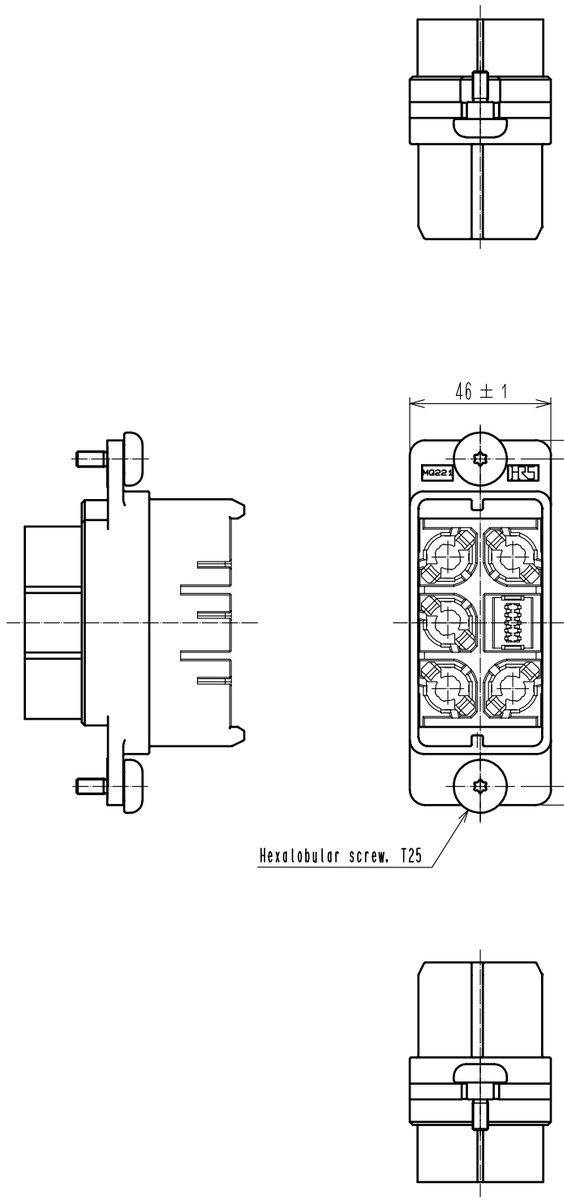


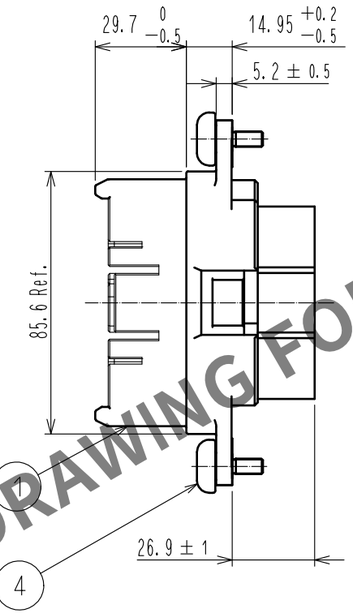


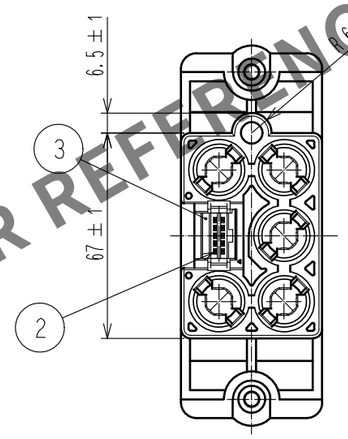


Recommended dimensions between panels (For reference)

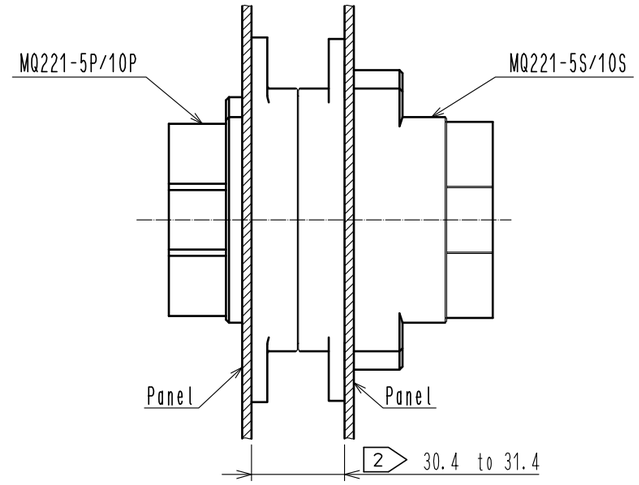


Planel Cutout

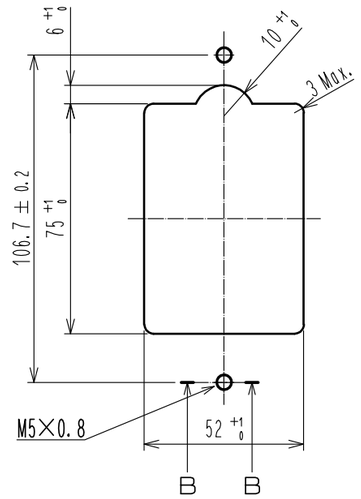




1 4 Attached Part

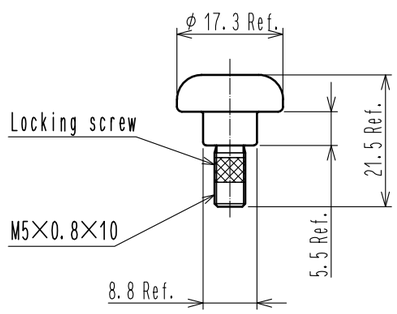


B−B ( 1 : 1 )

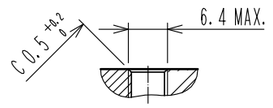


HRS DRAWING FOR REFERENCE

Note 1 The recommended screw tightening torque is 3 N・m.
2 The recommended dimensions between panels are from 30.4 to 31.4.
3 This product shall be mated with MQ221-5S/10S(CL0206-2564-0-00) without problem on the performance.
4 Applicable signal contact unit: HIF3BMQ-10D-2.54C(CL0610-0015-0-00)
HIF3MAW-10D-2.54R(CL0610-3002-9-00)
⚠1 5 Applicable crimping power contact: EM52M-PC2-132(05) (CL0138-0006-0-05)(38mm² contact)
EM52M-PC-112(05) (CL0138-0012-0-05)(22mm² contact)
EM52M-PC-142(05) (CL0138-0087-0-05)( 8mm² contact)
6 This product has a floating structure that float up to 2mm from the center of the mated position.

| NO. | MATERIAL | FINISH , REMARKS | NO. | MATERIAL | FINISH , REMARKS |
|---|---|---|---|---|---|
| 2 | Phosphor Bronze | Contact Plating:Gold 0.2μm min. Under Plating:Nickel 0.5μm min. | 4 | Steel | Over Plating:Nickel 2μm min. |
| 1 | PBT | Black. UL94V-0 | 3 | PBT | Black. UL94V-0 |

| UNITS | SCALE | | COUNT | DESCRIPTION OF REVISIONS | DESIGNED | CHECKED | DATE |
|---|---|---|---|---|---|---|---|
| mm | 1 : 2 | ⚠1 | 1 | DIS-E-00008194 | MO. SHIMOYAMA | KG. OKITA | 20220112 |

HIROSE ELECTRIC CO., LTD.

| | | |
|---|---|---|
| APPROVED | RI. TAKAYASU | 20171020 |
| CHECKED | NM. NISHIMATSU | 20171020 |
| DESIGNED | P. EKSOURIYA | 20171020 |
| DRAWN | P. EKSOURIYA | 20171020 |

| | |
|---|---|
| DRAWING NO. | EDC-129339-00-01 |
| PART NO. | MQ221-5P/10P |
| CODE NO. | CL0206-2563-0-00 ⚠1 1/1 |