SAC-2P- 3,0-PUR/DTFS-1L - Sensor/actuator cable

1410729

https://www.phoenixcontact.com/us/products/1410729

Please be informed that the data shown in this PDF document is generated from our online catalog. Please find the complete data in the user documentation. Our general terms of use for downloads are valid.



Sensor/actuator cable, 2-position, PUR halogen-free, black-gray RAL 7021, free cable end, on Socket straight DEUTSCH DT06-2S Clip locking, coding: A, with 1 LED, Wiring: unwired, cable length: 3 m

Commercial data

Item number	1410729
Packing unit	1 pc
Minimum order quantity	1 pc
Sales key	BF08
Product key	BF1DWA
Catalog page	Page 245 (C-2-2019)
GTIN	4046356924283
Weight per piece (including packing)	117.5 g
Weight per piece (excluding packing)	108.1 g
Customs tariff number	85444290
Country of origin	CZ

Technical data

Product properties

Product type	Sensor/actuator cable
Application	Mobile hydraulics
Number of positions	2
No. of cable outlets	1
Shielded	no
Coding	A

Material specifications

Flammability rating according to UL 94	V2
Seal material	Silicon
Material of grip body	TPU
Contact material	Cu alloy
Contact surface material	nickel-plated
Contact carrier material	PA 6.6
Material for screw connection	not available

Electrical properties

Insulation resistance	≥ 100 MΩ
Nominal voltage U_N	24 V DC
Nominal current I_N	8 A

Signaling

Status display	1 LED
Status display present	Yes

Connector

Connection 1

Type	free cable end

Connection 2

Type	Socket straight DEUTSCH DT06-2S Clip locking
Number of positions	2
Locking type	Clip locking
Coding type	A

Cable/line

Cable length	3 m

PUR halogen-free black [PUR]

Dimensional drawing	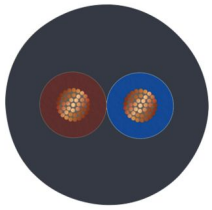
Cable weight	33 kg/km
UL AWM Style	20549 / 10493 (80°C/300 V)
Number of positions	2
Shielded	no
Cable type	PUR halogen-free black [PUR]
Conductor structure signal line	42x 0.15 mm
AWG signal line	18
Conductor cross section	2x 0.75 mm² (Signal line)
Wire diameter incl. insulation	1.69 mm ±0.05 mm (Signal line)
External cable diameter	4.80 mm ±0.15 mm
Outer sheath, material	PUR
External sheath, color	black-gray RAL 7021
Conductor material	Bare Cu litz wires
Material wire insulation	PP
Single wire, color	brown, blue
Thickness, insulation	≥ 0.21 mm
Thickness, outer sheath	≥ 0.38 mm
Overall twist	2 wires, twisted
Max. conductor resistance	≤ 26 Ω/km (at 20 °C)
Insulation resistance	≥ 1 GΩ*km (at 20 °C)
Nominal voltage, cable	≤ 300 V AC
Test voltage	≥ 3000 V AC (Spark test)
Minimum bending radius, fixed installation	5 x D
Minimum bending radius, flexible installation	10 x D
Smallest bending radius, fixed installation	24 mm
Smallest bending radius, movable installation	48 mm
Max. bending cycles	4000000
Halogen-free	in accordance with DIN VDE 0472 part 815
	in accordance with DIN EN 50267-2-1
Flame resistance	according to UL 758/1581 (horizontal)
	in accordance with UL 758/1581 FT2
	according to DIN EN 60332-2-2
Resistance to oil	According to DIN EN 60811-2-1, 168 h at 100°C
	According to UL 758, 168 h at 60°C
Other resistance	hydrolysis and microbe resistant
	partly UV-resistant (in accordance with DIN EN ISO 4892-2-A)

	Low adhesion
	abrasion-resistant
Special properties	flexible
	Flexible cable conduit capable
Ambient temperature (operation)	-40 °C ... 80 °C (cable, fixed installation)
	-25 °C ... 80 °C (Cable, flexible installation)

Environmental and real-life conditions

Ambient conditions

Degree of protection	IP67
	IP69K
Ambient temperature (operation)	-20 °C ... 85 °C (Plug / socket)

Drawings

Dimensional drawing

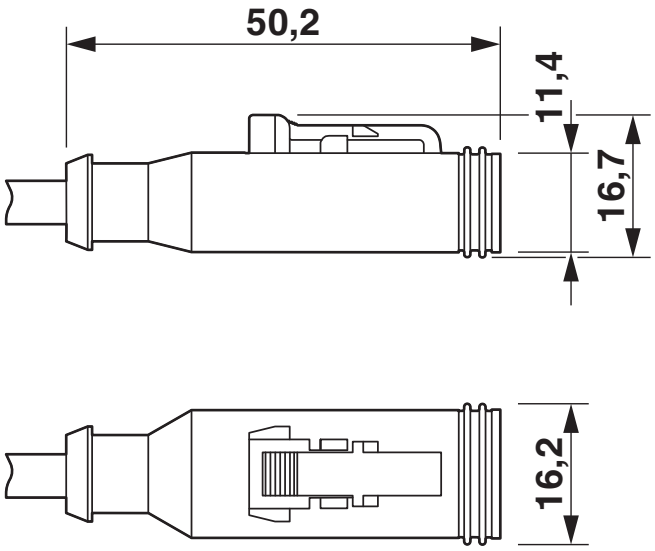

DEUTSCH DT06-2S, top view and side view

Schematic diagram

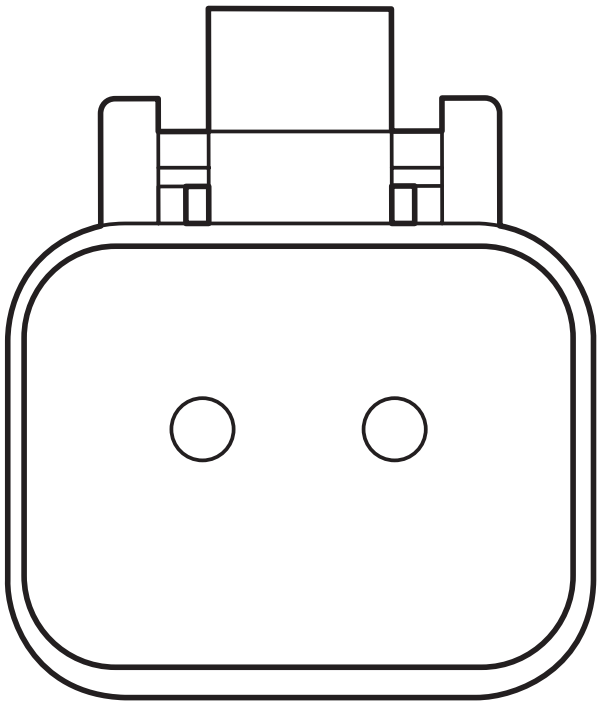

DEUTSCH DT06-2S pin assignment

Circuit diagram

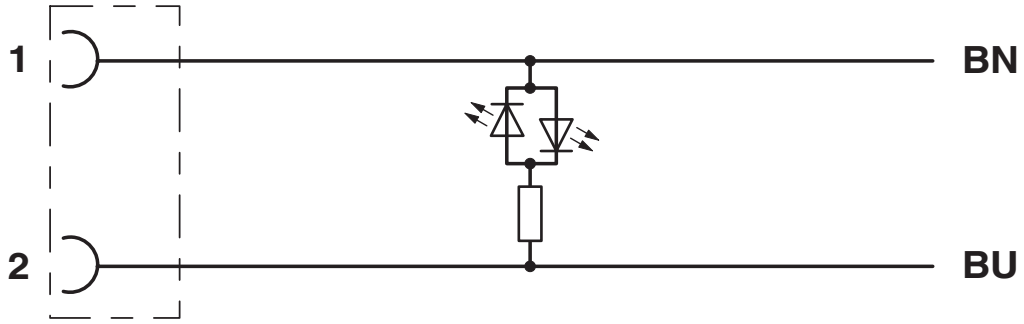

Approvals

To download certificates, visit the product detail page: https://www.phoenixcontact.com/us/products/1410729

EAC-RoHS
Approval ID: RU D-DE.HB35.B.00387

Classifications

ECLASS

ECLASS-11.0	27060311
ECLASS-12.0	27060311
ECLASS-13.0	27060311

ETIM

ETIM 9.0	EC001855

UNSPSC

UNSPSC 21.0	26121600

Environmental product compliance

EU RoHS

Fulfills EU RoHS substance requirements	Yes
Exemption	6(c), 7(a), 7(c)-I

China RoHS

Environment friendly use period (EFUP)	EFUP-50
	An article-related China RoHS declaration table can be found in the download area for the respective article under "Manufacturer declaration". For all articles with EFUP-E, no China RoHS declaration table issued and required.

EU REACH SVHC

REACH candidate substance (CAS No.)	Lead(CAS: 7439-92-1)
SCIP	20956b33-8aa7-46d5-9544-092e4d640b08

Accessories

UCT-WMT (23X4) - Conductor marker

0801453

https://www.phoenixcontact.com/us/products/0801453



Conductor marker, Sheet, white, unlabeled, can be labeled with: TOPMARK NEO, TOPMARK LASER, BLUEMARK ID COLOR, BLUEMARK ID, BLUEMARK CLED, THERMOMARK PRIME, THERMOMARK CARD 2.0, THERMOMARK CARD, mounting type: insert, cable diameter range: 1.5 ... 35 mm, lettering field size: 23 x 4 mm, Number of individual labels: 30

UC-WMT (23X4) - Conductor marker

0819411

https://www.phoenixcontact.com/us/products/0819411



Conductor marker, Sheet, white, unlabeled, can be labeled with: BLUEMARK ID COLOR, BLUEMARK ID, BLUEMARK CLED, PLOTMARK, CMS-P1-PLOTTER, mounting type: insert, cable diameter range: 1.5 ... 35 mm, lettering field size: 23 x 4 mm, Number of individual labels: 24

US-WMT (23X4) - Cable marker

0828769

https://www.phoenixcontact.com/us/products/0828769



Cable marker, Card, white, unlabeled, can be labeled with: BLUEMARK ID COLOR, BLUEMARK ID, THERMOMARK PRIME, THERMOMARK CARD 2.0, THERMOMARK CARD, mounting type: slide-on, cable diameter range: 1.5 ... 35 mm, lettering field size: 23 x 4 mm, Number of individual labels: 56

WMTW (23X4)R - Cable marker

0831004

https://www.phoenixcontact.com/us/products/0831004



Cable marker, Roll, white, unlabeled, can be labeled with: THERMOMARK E.300 (D)/600 (D), THERMOMARK ROLL 2.0, THERMOMARK ROLL, THERMOMARK ROLL X1, THERMOMARK ROLLMASTER 300/600, THERMOMARK X1.2, mounting type: insert, cable diameter range: 1.5 ... 35 mm, lettering field size: 23 x 4 mm, Number of individual labels: 3000

WP-CTA POM 13,0 BK - Protective hose adapter

1422884

https://www.phoenixcontact.com/us/products/1422884



Protective hose adapter, for corrugated hoses with a nominal size of 13 (10 x 13), corrugated in parallel

WP-PA HF 13,0 BK - Protective hose

3240681

https://www.phoenixcontact.com/us/products/3240681



Protective hose, material: PA 6, UV-resistant: yes, flexible, degree of protection: IP68, color: black, flammability rating in acc. with UL 94: V0, inner diameter: 10 mm, Total length: 50 m

WP-PA HF-HB 13,0 BK - Protective hose

3240839

https://www.phoenixcontact.com/us/products/3240839



Protective hose, material: PA 6, UV-resistant: yes, flexible, degree of protection: IP68, color: black, flammability rating in acc. with UL 94: HB, inner diameter: 10 mm, Total length: 50 m

B-STIFT - Marker pen

1051993

https://www.phoenixcontact.com/us/products/1051993



Marker pen, for manual labeling of unprinted Zack strips, smear-proof and waterproof, line thickness 0.5 mm

CUTFOX-S VDE - Diagonal cutter

1212207

https://www.phoenixcontact.com/us/products/1212207



Diagonal cutter for hard (piano wire) and soft wires, VDE 1000 V AC/1500 V DC tested

WIREFOX SAC-1 - Stripping tool

1212757

https://www.phoenixcontact.com/us/products/1212757



Stripping pliers, for halogen-free sensor/actuator cables (SAC cables), with PUR and PVC insulation, from Ø of 3.2 to 4.4 mm, any stripping length

WIREFOX SAC - Stripping tool

1212623

https://www.phoenixcontact.com/us/products/1212623



Stripping pliers, for halogen-free sensor/actuator cables (SAC cables), with PUR and PVC insulation, from Ø of 4.4 to 7 mm, any stripping length

WIREFOX 10 - Stripping tool

1212150

https://www.phoenixcontact.com/us/products/1212150



Stripping tool, for cables and conductors from 0.02 - 10 mm^2, self-adjusting, stripping length of up to 18 mm, cutting capacity of up to 10 mm^2 stranded/1.5 mm^2 solid, replaceable stripping blade

Phoenix Contact 2024 © - all rights reserved
https://www.phoenixcontact.com

Phoenix Contact USA
586 Fulling Mill Road
Middletown, PA 17057, United States
(+717) 944-1300
info@phoenixcon.com