Single 2-Input NOR Gate

MC74HC1G02

The MC74HC1G02 is a high speed CMOS 2−input NOR gate fabricated with silicon gate CMOS technology.

The internal circuit is composed of multiple stages, including a buffer output which provides high noise immunity and stable output.

The MC74HC1G02 output drive current is 1/2 compared to MC74HC series.

Features

- High Speed: t_{PD} = 7 ns (Typ) at V_{CC} = 5 V
- Low Power Dissipation: I_{CC} = 1 μA (Max) at T_A = 25°C
- High Noise Immunity
- Balanced Propagation Delays ($t_{pLH} = t_{pHL}$)
- Symmetrical Output Impedance ($I_{OH} = I_{OL}$ = 2 mA)
- Chip Complexity: < 100 FETs
- −Q Suffix for Automotive and Other Applications Requiring Unique Site and Control Change Requirements; AEC−Q100 Qualified and PPAP Capable
- These Devices are Pb−Free, Halogen Free/BFR Free and are RoHS Compliant

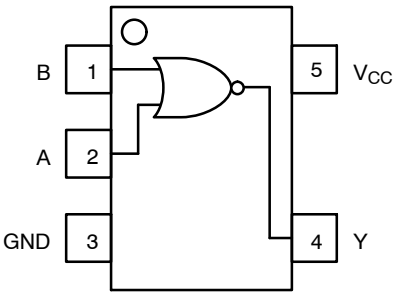

Figure 1. Pinout

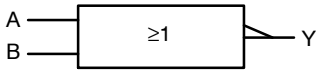

Figure 2. Logic Symbol

PIN ASSIGNMENT	
1	B
2	A
3	GND
4	Y
5	V_{CC}



SC−88A
DF SUFFIX
CASE 419A

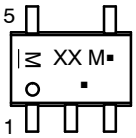

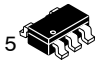

SC−74A
DBV SUFFIX
CASE 318BQ

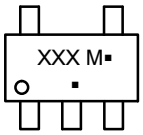

MARKING DIAGRAMS

XXX = Specific Device Code
M = Date Code
▪ = Pb−Free Package

(Note: Microdot may be in either location)

FUNCTION TABLE

Inputs		Output
A	**B**	**Y**
L	L	H
L	H	L
H	L	L
H	H	L

ORDERING INFORMATION

See detailed ordering, marking and shipping information in the package dimensions section on page 5 of this data sheet.

© Semiconductor Components Industries, LLC, 2012

MAXIMUM RATINGS

Symbol	Parameter		Value	Unit
V_{CC}	DC Supply Voltage		−0.5 to +6.5	V
V_{IN}	DC Input Voltage		−0.5 to V_{CC} +0.5	V
V_{OUT}	DC Output Voltage		−0.5 to V_{CC} +0.5	V
I_{IK}	DC Input Diode Current		±20	mA
I_{OK}	DC Output Diode Current		±20	mA
I_{OUT}	DC Output Source/Sink Current		±12.5	mA
I_{CC} or I_{GND}	DC Supply Current per Supply Pin or Ground Pin		±25	mA
T_{STG}	Storage Temperature Range		−65 to +150	°C
T_L	Lead Temperature, 1 mm from Case for 10 Seconds		260	°C
T_J	Junction Temperature Under Bias		+150	°C
θ_{JA}	Thermal Resistance (Note 1)	SC−88A SC−74A	377 320	°C/W
P_D	Power Dissipation in Still Air at 85°C	SC−88A SC−74A	332 390	mW
MSL	Moisture Sensitivity		Level 1	
F_R	Flammability Rating	Oxygen Index: 28 to 34	UL 94 V−0 @ 0.125 in	
V_{ESD}	ESD Withstand Voltage (Note 2)	Human Body Model Charged Device Model	2000 1000	V
$I_{LATCHUP}$	Latchup Performance (Note 3)		±100	mA

Stresses exceeding those listed in the Maximum Ratings table may damage the device. If any of these limits are exceeded, device functionality should not be assumed, damage may occur and reliability may be affected.

1. Measured with minimum pad spacing on an FR4 board, using 10 mm−by−1 inch, 20 ounce copper trace with no air flow per JESD51−7.
2. HBM tested to ANSI/ESDA/JEDEC JS−001−2017. CDM tested to JESD22−C101−F. JEDEC recommends that ESD qualification to EIA/JESD22−A115A (Machine Model) be discontinued per JEDEC/JEP172A.
3. Tested to EIA/JESD78 Class II.

RECOMMENDED OPERATING CONDITIONS

Symbol	Parameter		Min	Max	Unit
V_{CC}	DC Supply Voltage		2.0	6.0	V
V_{IN}	DC Input Voltage		0.0	V_{CC}	V
V_{OUT}	DC Output Voltage		0.0	V_{CC}	V
T_A	Operating Temperature Range		−55	+125	°C
t_r , t_f	Input Rise and Fall Time	V_{CC} = 2.0 V V_{CC} = 2.3 V to 2.7 V V_{CC} = 3.0 V to 3.6 V V_{CC} = 4.5 V to 6.0 V	0 0 0 0	20 20 10 5	ns/V

Functional operation above the stresses listed in the Recommended Operating Ranges is not implied. Extended exposure to stresses beyond the Recommended Operating Ranges limits may affect device reliability.

DC ELECTRICAL CHARACTERISTICS

Symbol	Parameter	Test Conditions	V_{CC} (V)	T_A = 25°C Min	T_A = 25°C Typ	T_A = 25°C Max	−40°C ≤ T_A ≤ 85°C Min	−40°C ≤ T_A ≤ 85°C Max	−55°C ≤ T_A ≤ 125°C Min	−55°C ≤ T_A ≤ 125°C Max	Unit
V_{IH}	High−Level Input Voltage		2.0 3.0 4.5 6.0	1.5 2.1 3.15 4.20	– – – –	– – – –	1.5 2.1 3.15 4.20	– – – –	1.5 2.1 3.15 4.20	– – – –	V
V_{IL}	Low−Level Input Voltage		2.0 3.0 4.5 6.0	– – – –	– – – –	0.5 0.9 1.35 1.80	– – – –	0.5 0.9 1.35 1.80	– – – –	0.5 0.9 1.35 1.80	V
V_{OH}	High−Level Output Voltage	V_{IN} = V_{IH} or V_{IL} I_{OH} = −20 μA	2.0 3.0 4.5 6.0	1.9 2.9 4.4 5.9	2.0 3.0 4.5 6.0	– – – –	1.9 2.9 4.4 5.9	– – – –	1.9 2.9 4.4 5.9	– – – –	V
		V_{IN} = V_{IH} or V_{IL} I_{OH} = −2 mA I_{OH} = −2.6 mA	4.5 6.0	4.18 5.68	4.31 5.80	– –	4.13 5.63	– –	4.08 5.58	– –	
V_{OL}	Low−Level Output Voltage	V_{IN} = V_{IH} or V_{IL} I_{OL} = 20 μA	2.0 3.0 4.5 6.0	– – – –	0.0 0.0 0.0 0.0	0.1 0.1 0.1 0.1	– – – –	0.1 0.1 0.1 0.1	– – – –	0.1 0.1 0.1 0.1	V
		V_{IN} = V_{IH} or V_{IL} I_{OL} = 2 mA I_{OL} = 2.6 mA	4.5 6.0	– –	0.17 0.18	0.26 0.26	– –	0.33 0.33	– –	0.40 0.40	
I_{IN}	Input Leakage Current	V_{IN} = 6.0 V or GND	6.0	–	–	±0.1	–	±1.0	–	±1.0	μA
I_{CC}	Quiescent Supply Current	V_{IN} = V_{CC} or GND	6.0	–	–	1.0	–	10	–	40	μA

AC ELECTRICAL CHARACTERISTICS

Symbol	Parameter	Test Conditions	T_A = 25°C Min	T_A = 25°C Typ	T_A = 25°C Max	−40°C ≤ T_A ≤ 85°C Min	−40°C ≤ T_A ≤ 85°C Max	−55°C ≤ T_A ≤ 125°C Min	−55°C ≤ T_A ≤ 125°C Max	Unit
t_{PLH}, t_{PHL}	Propagation Delay, (A or B) to Y	V_{CC} = 5.0 V C_L = 15 pF	–	3.5	15	–	20	–	25	ns
		V_{CC} = 2.0 V C_L = 50 pF V_{CC} = 3.0 V V_{CC} = 4.5 V V_{CC} = 6.0 V	– – – –	20 11 8 7	100 27 20 17	– – – –	125 35 25 21	– – – –	155 90 35 26	
t_{TLH}, t_{THL}	Output Transition Time	V_{CC} = 5.0 V C_L = 15 pF	–	3	10	–	15	–	20	ns
		V_{CC} = 2.0 V C_L = 50 pF V_{CC} = 3.0 V V_{CC} = 4.5 V V_{CC} = 6.0 V	– – – –	25 16 11 9	125 35 25 21	– – – –	155 45 31 26	– – – –	200 60 38 32	
C_{IN}	Input Capacitance		–	5	10	–	10	–	10	pF

		Typical @ 25°C, V_{CC} = 5.0 V	
C_{PD}	Power Dissipation Capacitance (Note 4)	10	pF

4. C_{PD} is defined as the value of the internal equivalent capacitance which is calculated from the operating current consumption without load. Average operating current can be obtained by the equation: $I_{CC(OPR)}$ = C_{PD} • V_{CC} • f_{in} + I_{CC}. C_{PD} is used to determine the no−load dynamic power consumption; P_D = C_{PD} • V_{CC}^2 • f_{in} + I_{CC} • V_{CC}.

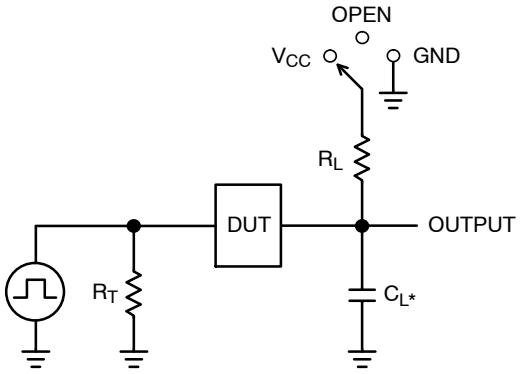

Test	Switch Position	C_L, pF	R_L, Ω
t_{PLH} / t_{PHL}	Open	See AC Characteristics Table	X
t_{TLH} / t_{THL} (Note 5)	Open		X
t_{PLZ} / t_{PZL}	V_{CC}		1 k
t_{PHZ} / t_{PZH}	GND		1 k

X – Don't Care

*C_L includes probe and jig capacitance
R_T is Z_{OUT} of pulse generator (typically 50 W)
f = 1 MHz

Figure 3. Test Circuit

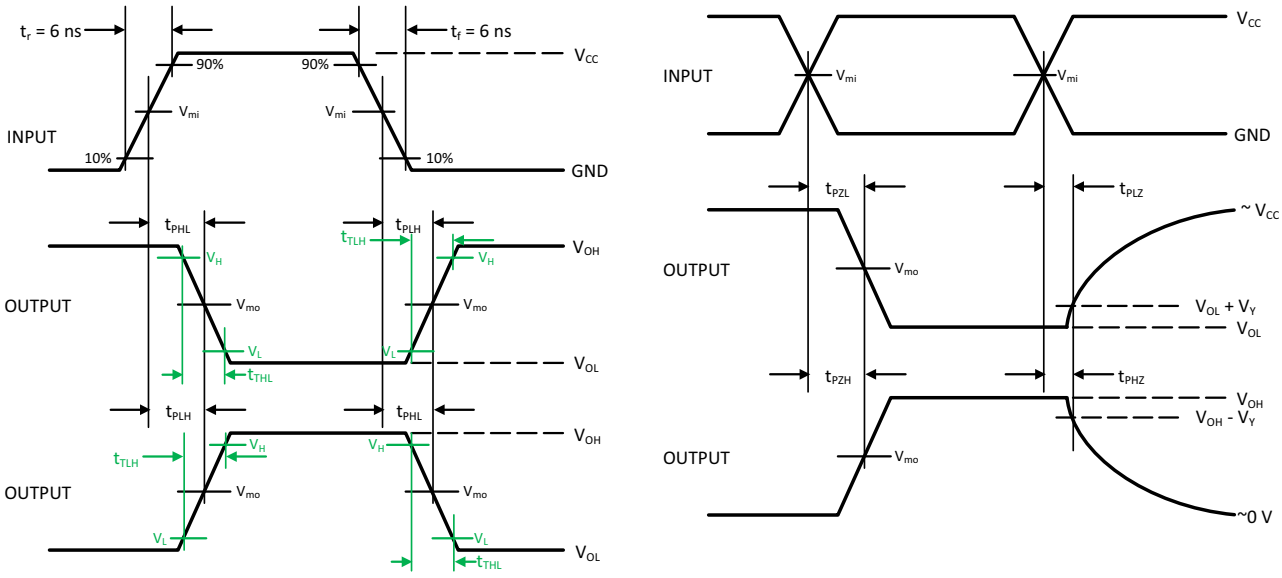

Figure 4. Switching Waveforms

V_{CC}, V	V_{mi}, V	V_{mo}, V		V_L, V	V_H, V	V_Y, V
		t_{PLH}, t_{PHL}	t_{PZL}, t_{PLZ}, t_{PZH}, t_{PHZ}			
3.0 to 3.6	V_{CC}/2	V_{CC}/2	V_{CC}/2	V_{OL} + 0.1 (V_{OH} – V_{OL})	V_{OL} + 0.9 (V_{OH} – V_{OL})	0.3
4.5 to 5.5	V_{CC}/2	V_{CC}/2	V_{CC}/2	V_{OL} + 0.1 (V_{OH} – V_{OL})	V_{OL} + 0.9 (V_{OH} – V_{OL})	0.3

5. t_{TLH} and t_{THL} are measured from 10% to 90% of (V_{OH} – V_{OL}), and 90% to 10% of (V_{OH} – V_{OL}), respectively.

ORDERING INFORMATION

Device	Packages	Specific Device Code	Pin 1 Orientation (See below)	Shipping†
MC74HC1G02DFT2G	SC−88A	H3	Q4	3000 / Tape & Reel
MC74HC1G02DFT2G−Q* (Please contact **onsemi**)	SC−88A	H3	Q4	3000 / Tape & Reel
MC74HC1G02DBVT1G	SC−74A	H3	Q4	3000 / Tape & Reel

†For complete information on tape and reel specifications, including part orientation and tape sizes, please refer to our Tape and Reel Packaging Specifications Brochure, BRD8011/D.

*−Q Suffix for Automotive and Other Applications Requiring Unique Site and Control Change Requirements; AEC−Q100 Qualified and PPAP Capable.

Pin 1 Orientation in Tape and Reel

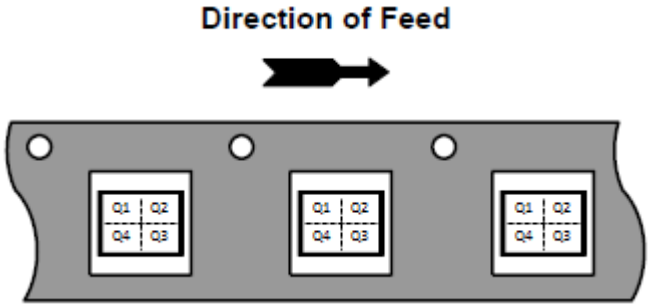

MECHANICAL CASE OUTLINE
PACKAGE DIMENSIONS

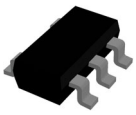

SC−74A−5 3.00x1.50x0.95, 0.95P
CASE 318BQ
ISSUE C

DATE 26 FEB 2024

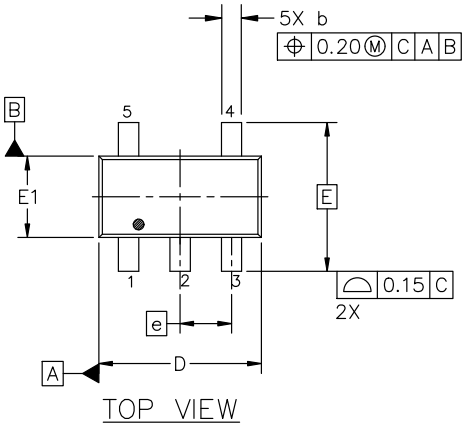

TOP VIEW

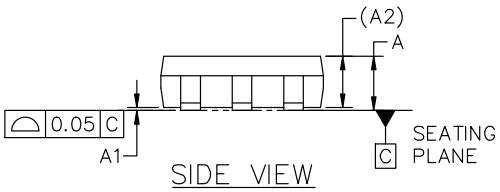

SIDE VIEW

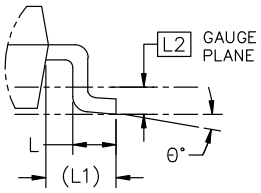

DETAIL "A"
SCALE 2:1

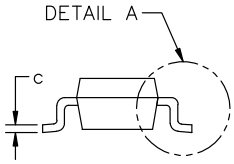

END VIEW

NOTES:

1. DIMENSIONING AND TOLERANCING CONFORM TO ASME Y14.5−2018.
2. ALL DIMENSION ARE IN MILLIMETERS (ANGLES IN DEGREES).
3. MAXIMUM LEAD THICKNESS INCLUDES LEAD FINISH THICKNESS. MINIMUM LEAD THICKNESS IS THE MINIMUM THICKNESS OF BASE MATERIAL.
4. DIMENSIONS D AND E1 DO NOT INCLUDE MOLD FLASH, PROTRUSIONS OF GATE BURRS. MOLD FLASH, PROTRUSIONS, OR GATE BURRS SHALL NOT EXCEED 0.15 PER SIDE.

DIM	MILLIMETERS		
	MIN.	NOM.	MAX.
A	0.90	1.00	1.10
A1	0.01	0.18	0.10
A2		0.95 REF.	
b	0.25	0.37	0.50
c	0.10	0.18	0.26
D	2.85	3.00	3.15
E		2.75 BSC	
E1	1.35	1.50	1.65
e		0.95 BSC	
L	0.20	0.40	0.60
L1		0.62 REF.	
L2		0.25 BSC	
θ	0°	5°	10°

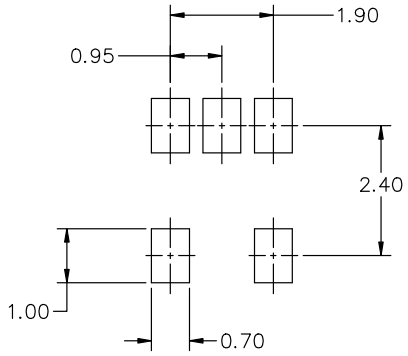

RECOMMENDED MOUNTING FOOTPRINT*

* FOR ADDITIONAL INFORMATION ON OUR Pb−FREE STRATEGY AND SOLDERING DETAILS, PLEASE DOWNLOAD THE ON SEMICONDUCTOR SOLDERING AND MOUNTING TECHNIQUES REFERENCE MANUAL, SOLDERRM/D.

GENERIC MARKING DIAGRAM*

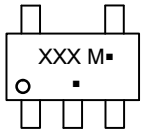

XXX = Specific Device Code
M = Date Code
▪ = Pb−Free Package

(Note: Microdot may be in either location)

*This information is generic. Please refer to device data sheet for actual part marking. Pb−Free indicator, "G" or microdot " ▪", may or may not be present. Some products may not follow the Generic Marking.

DOCUMENT NUMBER:	98AON66279G	Electronic versions are uncontrolled except when accessed directly from the Document Repository. Printed versions are uncontrolled except when stamped "CONTROLLED COPY" in red.
DESCRIPTION:	SC−74A−5 3.00x1.50x0.95, 0.95P	PAGE 1 OF 1

onsemi and onsemi are trademarks of Semiconductor Components Industries, LLC dba **onsemi** or its subsidiaries in the United States and/or other countries. **onsemi** reserves the right to make changes without further notice to any products herein. **onsemi** makes no warranty, representation or guarantee regarding the suitability of its products for any particular purpose, nor does **onsemi** assume any liability arising out of the application or use of any product or circuit, and specifically disclaims any and all liability, including without limitation special, consequential or incidental damages. **onsemi** does not convey any license under its patent rights nor the rights of others.

© Semiconductor Components Industries, LLC, 2018

MECHANICAL CASE OUTLINE
PACKAGE DIMENSIONS

SCALE 2:1

SC−88A (SC−70−5/SOT−353)
CASE 419A−02
ISSUE M

DATE 11 APR 2023

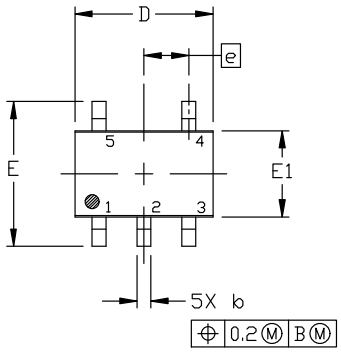

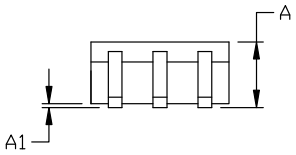

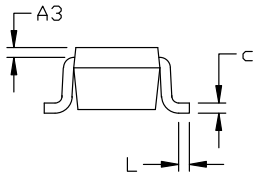

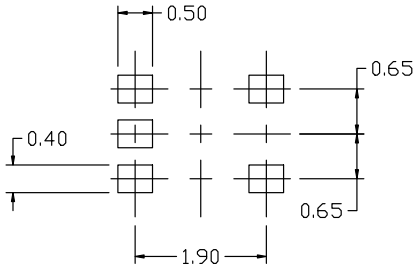

RECOMMENDED
MOUNTING FOOTPRINT

* For additional information on our Pb−Free strategy and soldering details, please download the ON Semiconductor Soldering and Mounting Techniques Reference Manual, SOLDERRM/D.

NOTES:

1. DIMENSIONING AND TOLERANCING PER ANSI Y14.5M, 1982.
2. CONTROLLING DIMENSION: MILLIMETERS
3. 419A−01 OBSOLETE. NEW STANDARD 419A−02
4. DIMENSIONS D AND E1 DO NOT INCLUDE MOLD FLASH, PROTRUSIONS, OR GATE BURRS. MOLD FLASH, PROTRUSIONS, OR GATE BURRS SHALL NOT EXCEED 0.1016MM PER SIDE.

DIM	MILLIMETERS		
	MIN.	NOM.	MAX.
A	0.80	0.95	1.10
A1	---	---	0.10
A3	0.20 REF		
b	0.10	0.20	0.30
c	0.10	---	0.25
D	1.80	2.00	2.20
E	2.00	2.10	2.20
E1	1.15	1.25	1.35
e	0.65 BSC		
L	0.10	0.15	0.30

GENERIC MARKING DIAGRAM*

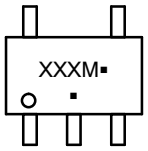

*This information is generic. Please refer to device data sheet for actual part marking. Pb−Free indicator, “G” or microdot “▪”, may or may not be present. Some products may not follow the Generic Marking.

XXX = Specific Device Code
M = Date Code
▪ = Pb−Free Package

(Note: Microdot may be in either location)

STYLE 1:
PIN 1. BASE
2. EMITTER
3. BASE
4. COLLECTOR
5. COLLECTOR

STYLE 2:
PIN 1. ANODE
2. EMITTER
3. BASE
4. COLLECTOR
5. CATHODE

STYLE 3:
PIN 1. ANODE 1
2. N/C
3. ANODE 2
4. CATHODE 2
5. CATHODE 1

STYLE 4:
PIN 1. SOURCE 1
2. DRAIN 1/2
3. SOURCE 1
4. GATE 1
5. GATE 2

STYLE 5:
PIN 1. CATHODE
2. COMMON ANODE
3. CATHODE 2
4. CATHODE 3
5. CATHODE 4

STYLE 6:
PIN 1. EMITTER 2
2. BASE 2
3. EMITTER 1
4. COLLECTOR
5. COLLECTOR 2/BASE 1

STYLE 7:
PIN 1. BASE
2. EMITTER
3. BASE
4. COLLECTOR
5. COLLECTOR

STYLE 8:
PIN 1. CATHODE
2. COLLECTOR
3. N/C
4. BASE
5. EMITTER

STYLE 9:
PIN 1. ANODE
2. CATHODE
3. ANODE
4. ANODE
5. ANODE

Note: Please refer to datasheet for style callout. If style type is not called out in the datasheet refer to the device datasheet pinout or pin assignment.

DOCUMENT NUMBER:	98ASB42984B	Electronic versions are uncontrolled except when accessed directly from the Document Repository. Printed versions are uncontrolled except when stamped “CONTROLLED COPY” in red.
DESCRIPTION:	SC−88A (SC−70−5/SOT−353)	PAGE 1 OF 1

onsemi and ONSEMI. are trademarks of Semiconductor Components Industries, LLC dba **onsemi** or its subsidiaries in the United States and/or other countries. **onsemi** reserves the right to make changes without further notice to any products herein. **onsemi** makes no warranty, representation or guarantee regarding the suitability of its products for any particular purpose, nor does **onsemi** assume any liability arising out of the application or use of any product or circuit, and specifically disclaims any and all liability, including without limitation special, consequential or incidental damages. **onsemi** does not convey any license under its patent rights nor the rights of others.

© Semiconductor Components Industries, LLC, 2018

onsemi, , and other names, marks, and brands are registered and/or common law trademarks of Semiconductor Components Industries, LLC dba "**onsemi**" or its affiliates and/or subsidiaries in the United States and/or other countries. **onsemi** owns the rights to a number of patents, trademarks, copyrights, trade secrets, and other intellectual property. A listing of **onsemi**'s product/patent coverage may be accessed at www.onsemi.com/site/pdf/Patent−Marking.pdf. **onsemi** reserves the right to make changes at any time to any products or information herein, without notice. The information herein is provided "as−is" and **onsemi** makes no warranty, representation or guarantee regarding the accuracy of the information, product features, availability, functionality, or suitability of its products for any particular purpose, nor does **onsemi** assume any liability arising out of the application or use of any product or circuit, and specifically disclaims any and all liability, including without limitation special, consequential or incidental damages. Buyer is responsible for its products and applications using **onsemi** products, including compliance with all laws, regulations and safety requirements or standards, regardless of any support or applications information provided by **onsemi**. "Typical" parameters which may be provided in **onsemi** data sheets and/or specifications can and do vary in different applications and actual performance may vary over time. All operating parameters, including "Typicals" must be validated for each customer application by customer's technical experts. **onsemi** does not convey any license under any of its intellectual property rights nor the rights of others. **onsemi** products are not designed, intended, or authorized for use as a critical component in life support systems or any FDA Class 3 medical devices or medical devices with a same or similar classification in a foreign jurisdiction or any devices intended for implantation in the human body. Should Buyer purchase or use **onsemi** products for any such unintended or unauthorized application, Buyer shall indemnify and hold **onsemi** and its officers, employees, subsidiaries, affiliates, and distributors harmless against all claims, costs, damages, and expenses, and reasonable attorney fees arising out of, directly or indirectly, any claim of personal injury or death associated with such unintended or unauthorized use, even if such claim alleges that **onsemi** was negligent regarding the design or manufacture of the part. **onsemi** is an Equal Opportunity/Affirmative Action Employer. This literature is subject to all applicable copyright laws and is not for resale in any manner.

ADDITIONAL INFORMATION

TECHNICAL PUBLICATIONS:
Technical Library: www.onsemi.com/design/resources/technical−documentation
onsemi Website: www.onsemi.com

ONLINE SUPPORT: www.onsemi.com/support
For additional information, please contact your local Sales Representative at www.onsemi.com/support/sales