Transceiver for KNX Twisted Pair Networks

NCN5110

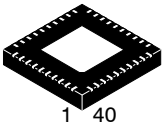

QFN40
MN SUFFIX
CASE 485AU

MARKING DIAGRAM

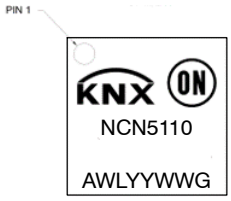

A = Assembly Location
WL = Wafer Lot
YY = Year
WW = Work Week
G = Pb−Free Package

ORDERING INFORMATION

See detailed ordering and shipping information in the package dimensions section on page 23 of this data sheet.

Introduction

NCN5110 is a receiver−transmitter IC suitable for use in KNX twisted pair networks (KNX TP1−256). It supports the connection of actuators, sensors, microcontrollers, switches or other applications in a building network.

NCN5110 handles the transmission and reception of active pulses on the bus. It generates from the unregulated bus voltage stabilized voltages for its own power needs as well as to power external devices, for example, a microcontroller.

NCN5110 assures safe coupling to and decoupling from the bus. Bus monitoring warns the external microcontroller in case of loss of power so that critical data can be stored in time.

Key Features

- Supervision of KNX Bus Voltage and Current
- Supports Bus Current Consumption up to 40 mA
- High Efficient DC−DC Converters
  - 3.3 V Fixed
  - 1.2 V to 21 V Selectable
- Control and Monitoring of Power Regulators
- Linear 20 V Regulator
- Direct Coupling of Analog Signaling to Host
- No Crystal Required
- Optional Clock of 8 or 16 MHz for External Devices
- Temperature Monitoring
- Extended Operating Temperature Range −40°C to +105°C
- These Devices are Pb−Free and are RoHS Compliant

© Semiconductor Components Industries, LLC, 2015

BLOCK DIAGRAM

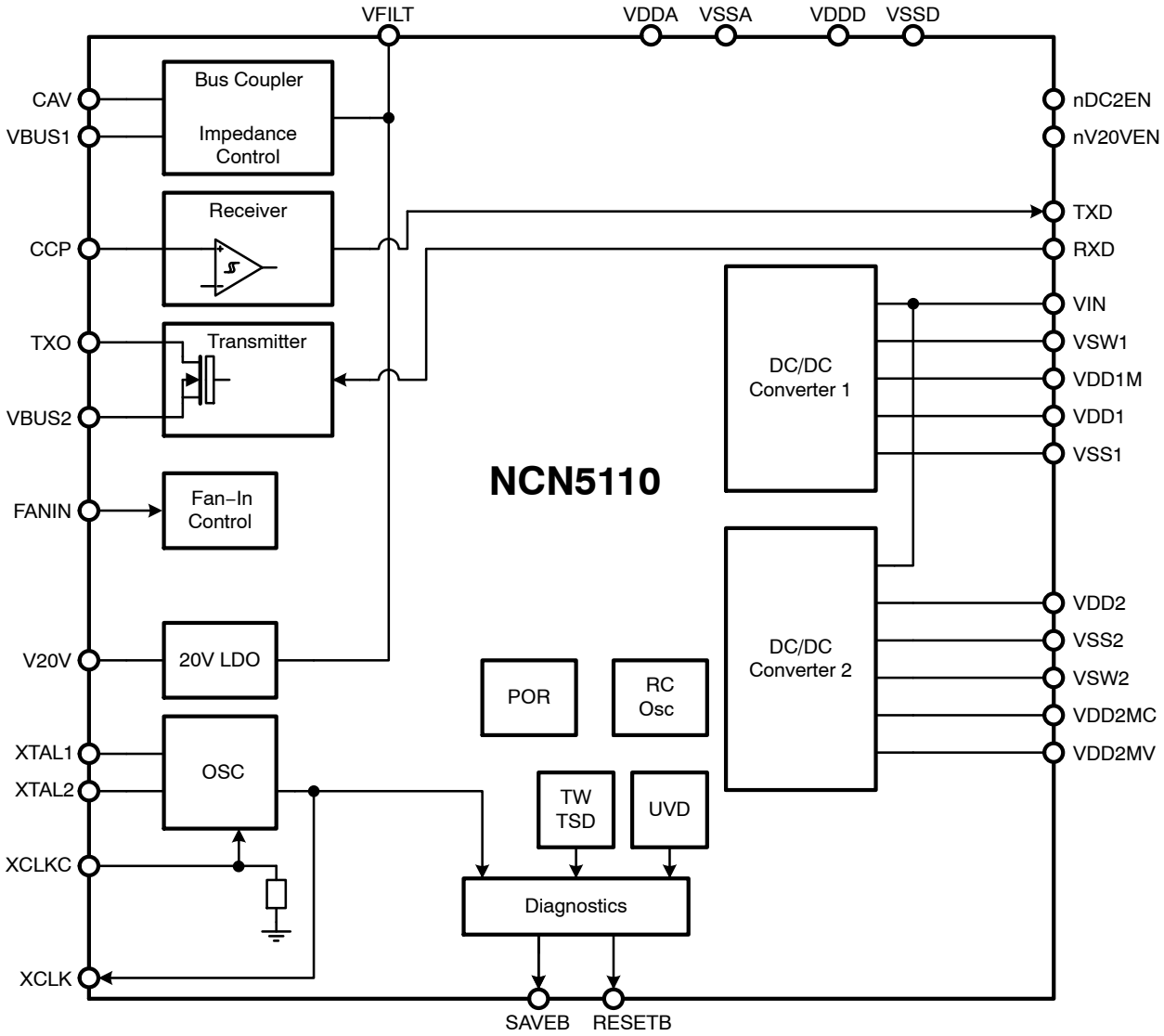

Figure 1. Block Diagram NCN5110

PIN OUT

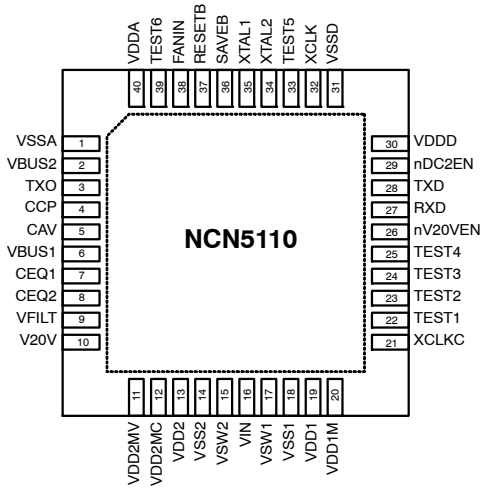

Figure 2. Pin Out NCN5110 (Top View)

PIN DESCRIPTION

Table 1. PIN LIST AND DESCRIPTION

Name	Pin	Description	Type	Equivalent Schematic
VSSA	1	Analog Supply Voltage Ground	Supply	
VBUS2	2	Ground for KNX Transmitter	Supply	
TX0	3	KNX Transmitter Output	Analog Output	Type 1
CCP	4	AC coupling external capacitor connection	Analog I/O	Type 2
CAV	5	Capacitor connection to average bus DC voltage	Analog I/O	Type 3
VBUS1	6	KNX power supply input	Supply	Type 5
CEQ1	7	Capacitor connection 1 for defining equalization pulse	Analog I/O	Type 4
CEQ2	8	Capacitor connection 2 for defining equalization pulse	Analog I/O	Type 4
VFILT	9	Filtered bus voltage	Supply	Type 5
V20V	10	20V supply output	Supply	Type 5
VDD2MV	11	Voltage monitor of Voltage Regulator 2	Analog Input	Type 8
VDD2MC	12	Current monitor input 1 of Voltage Regulator 2	Analog Input	Type 9
VDD2	13	Current monitor input 2 of Voltage Regulator 2	Analog Input	Type 8
VSS2	14	Voltage Regulator 2 Ground	Supply	
VSW2	15	Switch output of Voltage Regulator 2	Analog Output	Type 6
VIN	16	Voltage Regulator 1 and 2 Power Supply Input	Supply	Type 5
VSW1	17	Switch output of Voltage Regulator 1	Analog Output	Type 6
VSS1	18	Voltage Regulator 1 Ground	Supply	
VDD1	19	Current Input 2 and Voltage Monitor Input of Voltage Regulator 1	Analog Input	Type 8
VDD1M	20	Current Monitor Input 1 of Voltage Monitor 1	Analog Input	Type 9
XCLKC	21	Clock Frequency Configure	Digital Input	Type 12
TEST1	22	Test pin. Leave unconnected.	Digital Output	Type 13
TEST2	23	Test pin. Connect to VSS.	Digital Input	Type 12
TEST3	24	Test pin. Connect to VSS.	Digital Input	Type 12
TEST4	25	Test pin. Connect to VSS.	Digital Input	Type 12
nV20VEN	26	20 V LDO Disable	Digital Input	Type 14
RXD	27	Receive Input	Digital Input	Type 14
TXD	28	Transmit Output	Digital Output	Type 13
nDC2EN	29	Voltage Regulator 2 Disable	Digital Input	Type 14
VDDD	30	Digital Supply Voltage Input	Supply	Type 7
VSSD	31	Digital Supply Voltage Ground	Supply	
XCLK	32	Oscillator Clock Output	Digital Output	Type 13
TEST5	33	Test pin. Connect to VSS.	Digital Input	Type 12
XTAL2	34	Clock Generator Output (Quartz)	Analog Output	Type 10
XTAL1	35	Clock Generator Input (Quartz)	Analog Input	Type 10
SAVEB	36	Save Signal (open drain with pull−up)	Digital Output	Type 15
RESETB	37	Reset Signal (open drain with pull−up)	Digital Output	Type 15
FANIN	38	Fan−In Input	Analog Input	Type 11
TEST6	39	Test pin. Leave unconnected.	Analog Output	Type 16
VDDA	40	Analog Supply Voltage Input	Supply	Type 7

EQUIVALENT SCHEMATICS

Following figure gives the equivalent schematics of the user relevant inputs and outputs. The diagrams are simplified representations of the circuits used.

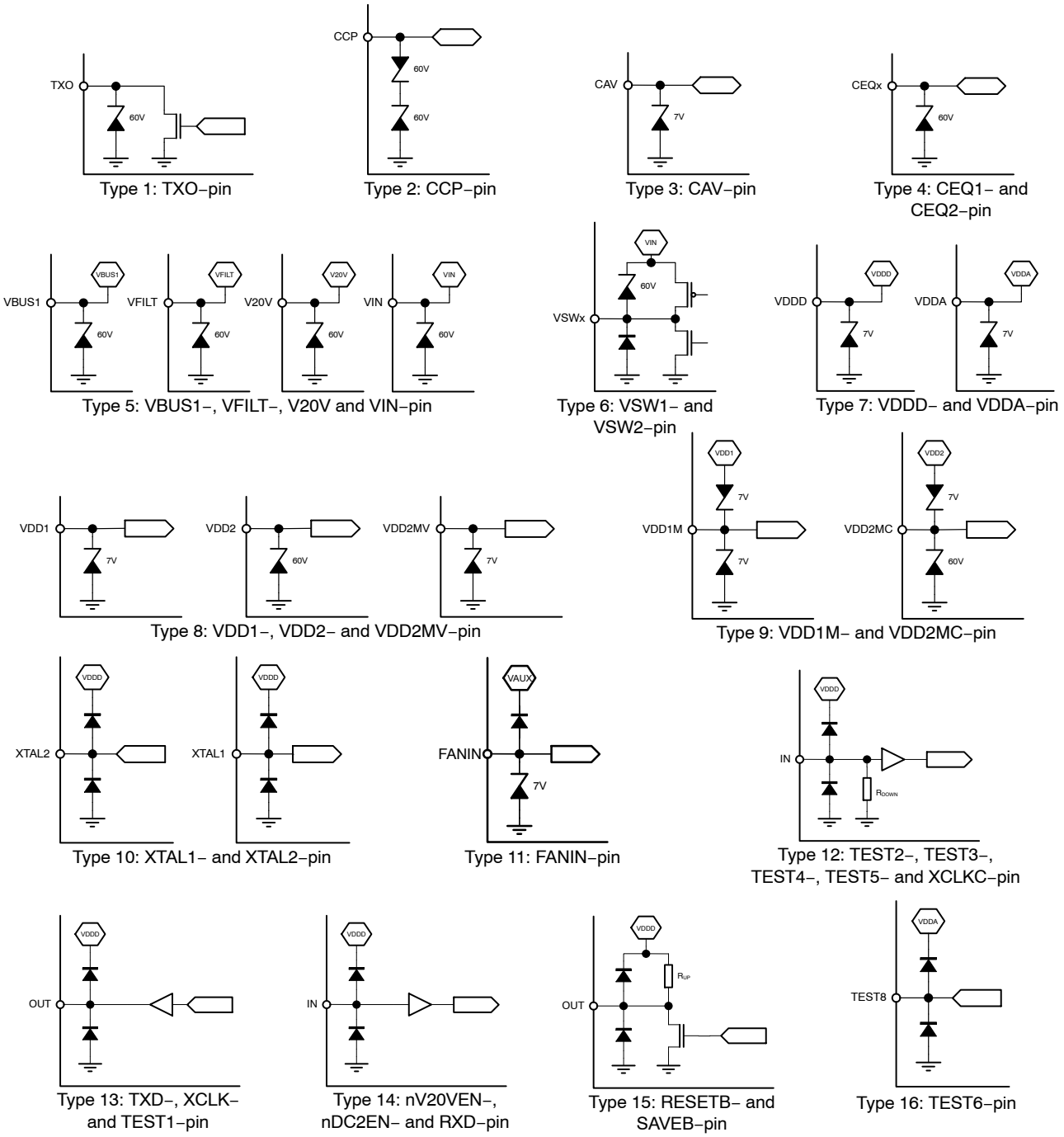

Figure 3. In− and Output Equivalent Diagrams

ELECTRICAL SPECIFICATION

Table 2. ABSOLUTE MAXIMUM RATINGS (Notes 1 and 2)

Symbol	Parameter	Min	Max	Unit
V_{TXO}	KNX Transmitter Output Voltage	−0.3	+45	V
I_{TXO}	KNX Transmitter Output Current (Note 3)		250	mA
V_{CCP}	Voltage on CCP−pin	−10.5	+14.5	V
V_{CAV}	Voltage on CAV−pin	−0.3	+3.6	V
V_{BUS1}	Voltage on VBUS1−pin	−0.3	+45	V
I_{BUS1}	Current Consumption VBUS1−pin	0	120	mA
V_{FILT}	Voltage on VFILT−pin	−0.3	+45	V
V_{20V}	Voltage on V20V−pin	−0.3	+25	V
V_{DD2MV}	Voltage on VDD2MV−pin	−0.3	+3.6	V
V_{DD2MC}	Voltage on VDD2MC−pin	−0.3	+45	V
V_{DD2}	Voltage on VDD2−pin	−0.3	+45	V
V_{SW}	Voltage on VSW1− and VSW2−pin	−0.3	+45	V
V_{IN}	Voltage on VIN−pin	−0.3	+45	V
V_{DD1}	Voltage on VDD1−pin	−0.3	+3.6	V
V_{DD1M}	Voltage on VDD1M−pin	−0.3	+3.6	V
V_{DIG}	Voltage on pins nV20VEN, nDC2EN, TXD, RXD, XCLK, SAVEB, RESETB, XCLKC, and FANIN	−0.3	+3.6	V
V_{DD}	Voltage on VDDD− and VDDA−pin	−0.3	+3.6	V
V_{XTAL}	Voltage on XTAL1− and XTAL2−pin	−0.3	+3.6	V
T_{ST}	Storage temperature	−55	+150	°C
T_J	Junction Temperature (Note 4)	−40	+155	°C
V_{HBM}	Human Body Model electronic discharge immunity (Note 5)	−2	+2	kV

Stresses exceeding those listed in the Maximum Ratings table may damage the device. If any of these limits are exceeded, device functionality should not be assumed, damage may occur and reliability may be affected.

1. Convention: currents flowing in the circuit are defined as positive.
2. VBUS2, VSS1, VSS2, VSSA and VSSD form the common ground. They are hard connected to the PCB ground layer.
3. Room temperature, 27 Ω shunt resistor for transmitter, 250 mA over temperature range.
4. Normal performance within the limitations is guaranteed up to the Thermal Warning level. Between Thermal Warning and Thermal Shutdown temporary loss of function or degradation of performance (which ceases after the disturbance ceases) is possible.
5. According to JEDEC JESD22−A114.

RECOMMENDED OPERATING RANGES

Operating ranges define the limits for functional operation and parametric characteristics of the device. Note that the functionality of the chip outside these operating ranges is not guaranteed. Operating outside the recommended operating ranges for extended periods of time may affect device reliability.

Table 3. OPERATING RANGES

Symbol	Parameter	Min	Max	Unit
V_{BUS1}	VBUS1 Voltage (Note 6)	+20	+33	V
V_{DD}	Digital and Analog Supply Voltage (VDDD− and VDDA−pin)	+3.13	+3.47	V
V_{IN}	Input Voltage DC−DC Converter 1 and 2	(Note 7)	+33	V
V_{CCP}	Input Voltage at CCP−pin	−10.5	+14.5	V
V_{CAV}	Input Voltage at CAV−pin	0	+3.3	V
V_{DD1}	Input Voltage on VDD1−pin	+3.13	+3.47	V
V_{DD1M}	Input Voltage on VDD1M−pin	+3.13	+3.57	V
V_{DD2}	Input Voltage on VDD2−pin	+1.2	+21	V
V_{DD2MC}	Input Voltage on VDD2MC−pin	+1.2	+21.1	V
V_{DD2MV}	Input Voltage on VDD2MV−pin	+1.2	VDD	V
V_{DIG}	Input Voltage on pins nV20VEN, nDC2EN, RXD and XCLKC	0	VDD	V
V_{FANIN}	Input Voltage on FANIN−pin	0	3.6	V
f_{clk}	Clock Frequency External Quartz	16		MHz
T_A	Ambient Temperature	−40	+105	°C
T_J	Junction Temperature (Note 8)	−40	+125	°C

Functional operation above the stresses listed in the Recommended Operating Ranges is not implied. Extended exposure to stresses beyond the Recommended Operating Ranges limits may affect device reliability.

6. Voltage indicates DC value. With equalization pulse bus voltage must be between 11 V and 45 V.
7. Minimum operating voltage on VIN−pin should be at least 1 V larger than the highest value of VDD1 and VDD2.
8. Higher junction temperature can result in reduced lifetime.

Table 4. DC PARAMETERS
(The DC parameters are given for a device operating within the Recommended Operating Conditions unless otherwise specified. Convention: currents flowing in the circuit are defined as positive.)

Symbol	Pin(s)	Parameter	Remark/Test Conditions	Min	Typ	Max	Unit
POWER SUPPLY							
V_{BUS1}	VBUS1	Bus DC voltage	Excluding active and equalization pulse	20		33	V
I_{BUS1_Int}	VBUS1	Bus Current Consumption	V_{BUS} = 30 V, I_{BUS} = 10mA, DC2, V20V disabled, no crystal or clock		1.25	1.70	mA
			V_{BUS} = 20 V, I_{BUS} = 40 mA		2.75	3.40	
V_{BUSH}	VBUS1	Undervoltage release level	V_{BUS1} rising, see Figure 4	17.1	18.0	18.9	V
V_{BUSL}	VBUS1	Undervoltage trigger level	V_{BUS1} falling, see Figure 4	15.9	16.8	17.7	V
V_{BUS_Hyst}	VBUS1	Undervoltage hysteresis		0.6			V
V_{DDD}	VDDD	Digital Power Supply		3.13	3.3	3.47	V
V_{DDA}	VDDA	Analog Power Supply		3.13	3.3	3.47	V
V_{AUX}		Auxiliary Supply	Internal supply, for info only	2.8	3.3	3.6	V
KNX BUS COUPLER							
$\Delta I_{coupler}/\Delta t$	VBUS1	Bus Coupler Current Slope Limitation	FANIN floating, $V_{FILT} > V_{FILTH}$		0.40	0.50	A/s
			FANIN = GND, VFILT > VFILTH		0.80	1.00	
			Resistor R6 = 10k, $V_{FILT} > V_{FILTH}$		1.51	1.95	
			Resistor R6 = 13.3k, $V_{FILT} > V_{FILTH}$		1.17	1.47	
			Resistor R6 = 20k, $V_{FILT} > V_{FILTH}$		0.78	0.98	
			Resistor R6 = 42.2k, $V_{FILT} > V_{FILTH}$		0.37	0.48	
			Resistor R6 = 93.1k, $V_{FILT} > V_{FILTH}$		0.17	0.23	
$I_{coupler_lim, startup}$	VBUS1	Bus Coupler Startup Current Limitation	FANIN floating, $V_{FILT} > V_{FILTH}$	20.0	25.0	30.0	mA
			FANIN = GND, $V_{FILT} > V_{FILTH}$	40.0	50.0	60.0	
			Resistor R6 = 10k, $V_{FILT} > V_{FILTH}$	45.0	72.2	114.0	
			Resistor R6 = 13.3k, $V_{FILT} > V_{FILTH}$	45.0	70.7	86.0	
			Resistor R6 = 20k, $V_{FILT} > V_{FILTH}$	40.0	48.5	57.5	
			Resistor R6 = 42.2k, $V_{FILT} > V_{FILTH}$	19.5	23.4	27.8	
			Resistor R6 = 93.1k, $V_{FILT} > V_{FILTH}$	9.4	11.3	13.1	
$I_{coupler_lim}$	VBUS1	Bus Coupler Current Limitation	FANIN floating, $V_{FILT} > V_{FILTH}$	10.8	11.4	12	mA
			FANIN = GND, $V_{FILT} > V_{FILTH}$	20.5	22.3	24	
			Resistor R6 = 10k, $V_{FILT} > V_{FILTH}$	39.6	43.9	47.0	
			Resistor R6 = 13.3k, $V_{FILT} > V_{FILTH}$	30.0	33.0	35.2	
			Resistor R6 = 20k, $V_{FILT} > V_{FILTH}$	20.2	22.1	23.6	
			Resistor R6 = 42.2k, $V_{FILT} > V_{FILTH}$	9.4	10.7	11.9	
			Resistor R6 = 93.1k, $V_{FILT} > V_{FILTH}$	4.2	5.1	6.0	
$V_{coupler_drop}$	VBUS1, VFILT	Coupler Voltage Drop ($V_{coupler_drop} = V_{BUS1} - V_{FILT}$)	I_{BUS1} = 10 mA		1.72	2.32	V
			I_{BUS1} = 20 mA		2.34	2.80	
			I_{BUS1} = 30 mA		2.94	3.40	
			I_{BUS1} = 40 mA		3.57	4.25	
V_{FILTH}	VFILT	Undervoltage release level	V_{FILT} rising, see Figure 5	10.1	10.6	11.2	V
V_{FILTL}	VFILT	Undervoltage trigger level	V_{FILT} falling, see Figure 5	8.4	8.9	9.4	V

Table 4. DC PARAMETERS (continued)
(The DC parameters are given for a device operating within the Recommended Operating Conditions unless otherwise specified. Convention: currents flowing in the circuit are defined as positive.)

Symbol	Pin(s)	Parameter	Remark/Test Conditions	Min	Typ	Max	Unit
FIXED DC−DC CONVERTER							
V_{IN}	VIN	Input Voltage		4.47		33	V
V_{DD1}	VDD1	Output Voltage		3.13	3.3	3.47	V
V_{DD1_rip}		Output Voltage Ripple	V_{IN} = 25 V, I_{DD1} = 40 mA, L1 = 220 μH		40		mV
I_{DD1_lim}		Overcurrent Threshold	R_2 = 1 Ω	−100		−200	mA
η_{VDD1}		Power Efficiency (DC Converter Only)	V_{in} = 25 V, I_{DD1} = 35 mA, L_1 = 220 μH (1.26 Ω ESR)		90		%
$R_{DS(on)_p1}$		$R_{DS(on)}$ of power switch	See Figure 12			8	Ω
$R_{DS(on)_n1}$		$R_{DS(on)}$ of flyback switch	See Figure 12			4	Ω
V_{DD1M}	VDD1M	Input voltage VDD1M−pin				3.57	V
ADJUSTABLE DC−DC CONVERTER							
V_{IN}	VIN	Input Voltage		V_{DD2} + 1		33	V
V_{DD2}	VDD2	Output Voltage	$V_{IN} \geq V_{DD2}$	1.2		21	V
V_{DD2H}		Undervoltage release level	V_{DD2} rising, see Figure 6		0.9 x V_{DD2}		V
V_{DD2L}		Undervoltage trigger level	V_{DD2} falling, see Figure 6		0.8 x V_{DD2}		V
V_{DD2_rip}		Output Voltage Ripple	V_{IN} = 25 V, V_{DD2} = 3.3 V, I_{DD2} = 40 mA, L2 = 220 μH		40		mV
I_{DD2_lim}		Overcurrent Threshold	R_3 = 1 Ω	−100		−250	mA
η_{VDD2}		Power Efficiency (DC Converter Only)	V_{in} = 25 V, V_{DD2} = 3.3 V, I_{DD2} = 35 mA, L_2 = 220 μH (1.26 Ω ESR)		90		%
$R_{DS(on)_p2}$		$R_{DS(on)}$ of power switch	See Figure 12			8	Ω
$R_{DS(on)_n2}$		$R_{DS(on)}$ of flyback switch	See Figure 12			4	Ω
V_{DD2M}	VDD2MC	Input voltage VDD2MC−pin				21.1	V
R_{VDD2M}	VDD2MV	Input Resistance VDD2MV−pin		1			MΩ
$I_{leak,vsw2}$		Half−bridge leakage				20	μA
V20V REGULATOR							
V_{20V}	V20V	V20V Output Voltage	$I_{20V} < I_{20V_lim}$, $V_{FILT} \geq 21$ V	18	20	22	V
I_{20V_lim}		V20V Output Current Limitation	R_6 > 250 kΩ	4.34	5.68	8.00	mA
			10 kΩ < R_6 < 93.1 kΩ	132.0/R_6	273.4/R_6	392.0/R_6	A
			R_6 < 2 kΩ	9.52	12.37	16.00	mA
V_{20VH}		V20V Undervoltage release level	V_{20V} rising, see Figure 7	14.2	15.0	15.8	V
V_{20VL}		V20V Undervoltage trigger level	V_{20V} falling, see Figure 7	13.2	14.0	14.8	V
V_{20V_hyst}		V20V Undervoltage hysteresis	$V_{20V_hyst} = V_{20VH} - V_{20VL}$		1.0		V
XTAL OSCILLATOR							
V_{XTAL}	XTAL1, XTAL2	Voltage on XTAL−pin				V_{DDD}	V
FAN−IN CONTROL							
$I_{pu,fanin}$	FANIN	Pull−Up Current FANIN−pin	FANIN shorted to GND, Pull−up connected to V_{AUX}	10	20	40	μA

Table 4. DC PARAMETERS (continued)
(The DC parameters are given for a device operating within the Recommended Operating Conditions unless otherwise specified. Convention: currents flowing in the circuit are defined as positive.)

Symbol	Pin(s)	Parameter	Remark/Test Conditions	Min	Typ	Max	Unit
DIGITAL INPUTS							
V_{IL}	nV20VEN, nDC2EN, RXD, XCLKC	Logic Low Threshold		0		0.7	V
V_{IH}		Logic High Threshold		2.65		V_{DDD}	V
R_{DOWN}	XCLKC	Internal Pull−Down Resistor		5	10	28	kΩ
DIGITAL OUTPUTS							
V_{OL}	TXD, XCLK	Logic low output level		0		0.4	V
V_{OH}		Logic high output level		V_{DDD} − 0.45		V_{DDD}	V
I_L	XCLK	Load Current				8	mA
	TXD					4	mA
V_{OL}	SAVEB, RESETB	Logic low level open drain	I_{OL} = 4 mA			0.4	V
R_{up}		Internal Pull−up Resistor		20	40	80	kΩ
TEMPERATURE MONITOR							
T_{TW}		Thermal Warning	Rising temperature See Figure 8	105	115	125	°C
T_{TSD}		Thermal shutdown	Rising temperature See Figure 8	130	140	150	°C
T_{Hyst}		Thermal Hysteresis	See Figure 8	5	11	15	°C
ΔT		Delta T_{TSD} and T_{TW}	See Figure 8		21.7		°C
PACKAGE THERMAL RESISTANCE VALUE							
$R_{\theta,ja}$		Thermal Resistance Junction−to−Ambient	Simulated Conform JEDEC JESD−51, (2S2P)		30		K/W
			Simulated Conform JEDEC JESD−51, (1S0P)		60		K/W
$R_{\theta,jp}$		Thermal Resistance Junction−to−Exposed Pad			0.95		K/W

Table 5. AC PARAMETERS
(The AC parameters are given for a device operating within the Recommended Operating Conditions unless otherwise specified.)

Symbol	Pin(s)	Parameter	Remark/Test Conditions	Min	Typ	Max	Unit
POWER SUPPLY							
t_{BUS_FILTER}	VBUS1	VBUS1 filter time	See Figure 4		2		ms
FIXED DC−DC CONVERTER							
t_{VSW1_rise}	VSW1	Rising slope at VSW1−pin			0.45		V/ns
t_{VSW1_fall}		Falling slope at VSW1−pin			0.6		V/ns
ADJUSTABLE DC−DC CONVERTER							
t_{VSW2_rise}	VSW2	Rising slope at VSW2−pin			0.45		V/ns
t_{VSW2_fall}		Falling slope at VSW2−pin			0.6		V/ns
XTAL OSCILLATOR							
f_{XTAL}	XTAL1, XTAL2	XTAL Oscillator Frequency			16		MHz

Product parametric performance is indicated in the Electrical Characteristics for the listed test conditions, unless otherwise noted. Product performance may not be indicated by the Electrical Characteristics if operated under different conditions.

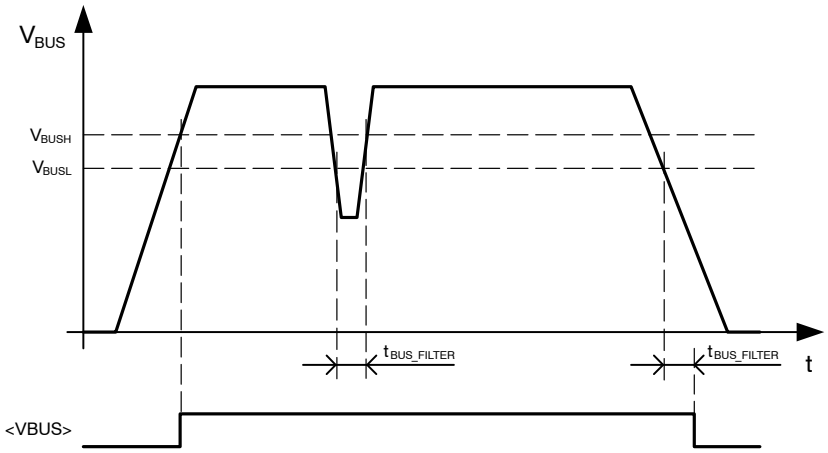

Comments:
<VBUS> is an internal signal which ca be verified with the Internal State Service.

Figure 4. Bus Voltage Undervoltage Threshold

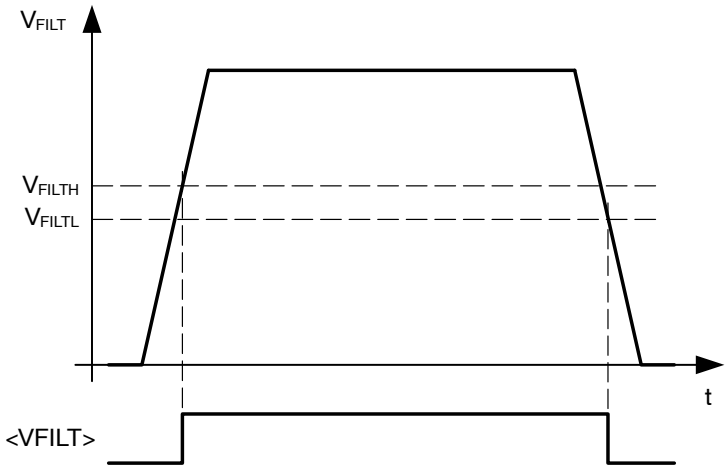

Comments:
<VFILT> is an internal signal which ca be verified with the Internal State Service.

Figure 5. VFILT Undervoltage Threshold

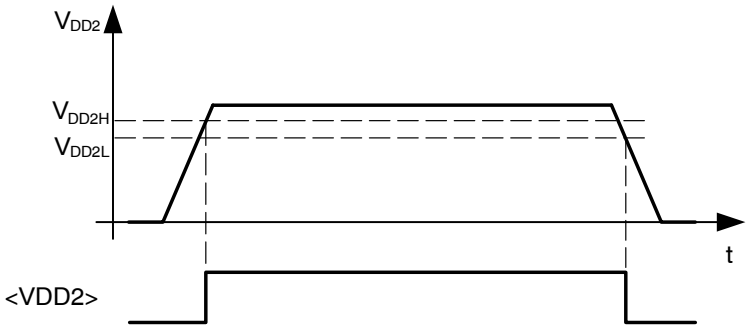

Comments:
<VDD2> is an internal signal which ca be verified with the Internal State Service.

Figure 6. VDD2 Undervoltage Thresholds

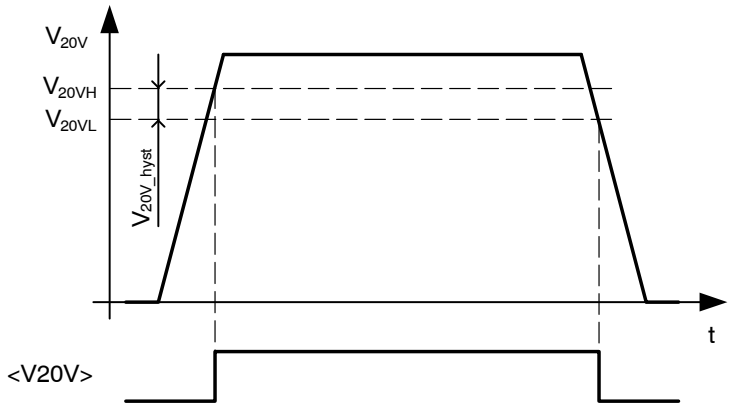

Comments:
<V20V> is an internal signal which ca be verified with the Internal State Service.

Figure 7. V20V Undervoltage Threshold levels

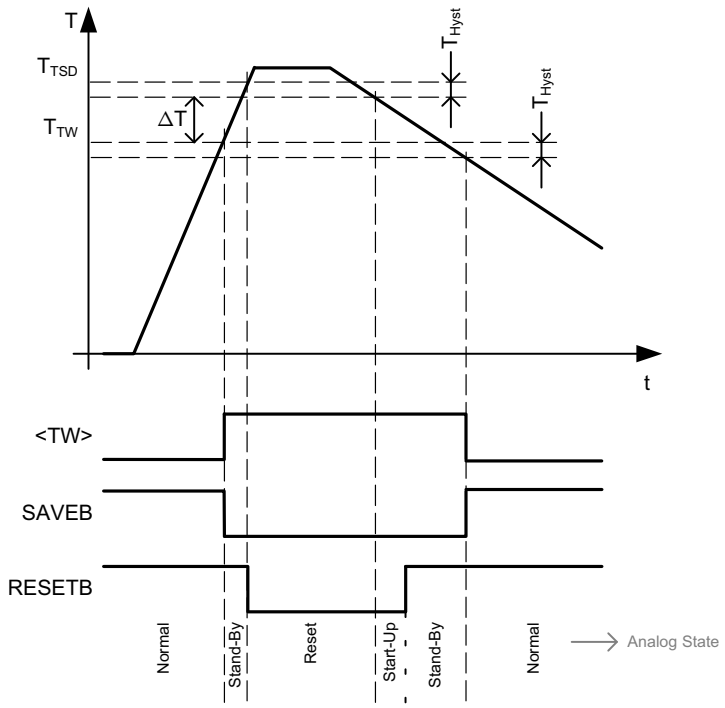

Comments:
– <TW> is an internal signal which can be verified with the System State Service
– No communication possible when RESETB is low!
– It's assumed all voltage supplies are withing their operating condition.

Figure 8. Temperature Monitoring Levels

TYPICAL APPLICATION SCHEMATICS

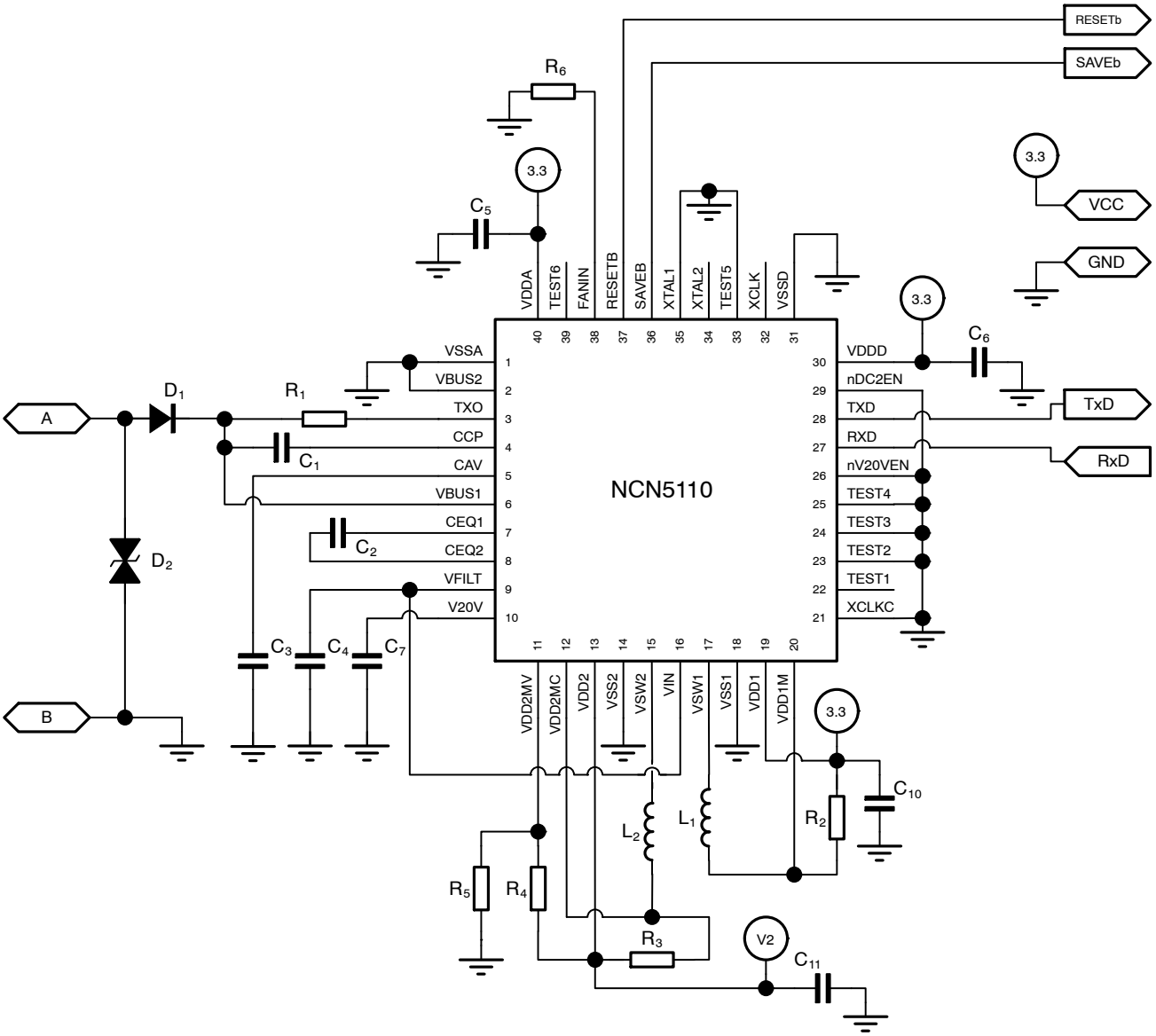

Figure 9. Typical Application Schematic, 20 mA Bus Current Limit and 1.0 mA/ms Bus Current Slopes

Table 6. EXTERNAL COMPONENTS LIST AND DESCRIPTION

Comp.	Function	Min	Typ	Max	Unit	Remarks	Notes
C_1	AC coupling capacitor	42.3	47	51.7	nF	50 V, Ceramic	9
C_2	Equalization capacitor	198	220	242	nF	50 V, Ceramic	9
C_3	Capacitor to average bus DC voltage	80	100	120	nF	50 V, Ceramic	9
C_4	Storage and filter capacitor VFILT	12.5	100	4000	μF	35 V	9, 15
C_5	VDDA HF rejection capacitor	80	100		nF	6.3 V, Ceramic	
C_6	VDDD HF rejection capacitor	80	100		nF	6.3 V, Ceramic	
C_7	Load Capacitor V20V		1		μF	35 V, Ceramic, ESR < 2 Ω	12, 13, 15
C_{10}	Load capacitor VDD1	8	10		μF	6.3 V, Ceramic, ESR < 0.1 Ω	
C_{11}	Load capacitor VDD2	8	10		μF	Ceramic, ESR < 0.1 Ω	10
R_1	Shunt resistor for transmitting	24.3	27	29.7	Ω	1 W	9
R_2	DC1 sensing resistor	0.47	1	10	Ω	1/16 W	
R_3	DC2 sensing resistor	0.47	1	10	Ω	1/16 W	
R_4	Voltage divider to specify VDD2	0			Ω	1/16 W, see p15 for calculating the exact value	
R_5		0		1000	kΩ		
L_1, L_2	DC1/DC2 inductor		220		μH		
D_1	Reverse polarity protection diode	SS16					11
D_2	Voltage suppressor	1SMA40CA					
R_6	Fan-In Programming Resistor	10		93.1	kΩ	1% precision	14

9. Component must be between minimum and maximum value to fulfill the KNX requirement.
10. Voltage of capacitor depends on VDD2 value defined by R4 and R5. See p16 for more details on defining VDD2 voltage value.
11. Reverse polarity diode is mandatory to fulfill the KNX requirement.
12. It's allowed to short this pin to VFILT-pin
13. High capacitor value might affect the start up time
14. If no resistor connected or pulled up to 3.3 V the KNX device should be certified as a bus load of 10 mA. If shorted to ground the KNX device should be certified as a bus load of 20 mA. If a resistor to ground is connected between 10 kΩ and 93.1 kΩ the device should be certified as a bus load of 10 mA (42.2 k), 20 mA (20 k), 30 mA (13.3 k) or 40 mA (10 k).
15. Total charge of C4 and C7 may not be higher than 121 mC to fulfill the KNX requirement.

ANALOG FUNCTIONAL DESCRIPTION

Because NCN5110 follows the KNX standard only a brief description of the KNX related blocks is given in this datasheet. Detailed information on the KNX Bus can be found on the KNX website (www.knx.org) and in the KNX standards.

KNX Bus Interfacing

Each bit period is 104 µs. Logic 1 is simply the DC level of the bus voltage which is between 20 V and 33 V. Logic 0 is encoded as a drop in the bus voltage with respect to the DC level. Logic 0 is known as the active pulse.

The active pulse is produced by the transmitter and is ideally rectangular. It has a duration of 35 µs and a depth between 6 and 9 V (V_{act}). Each active pulse is followed by an equalization pulse with a duration of 69 µs. The latter is an abrupt jump of the bus voltage above the DC level followed by an exponential decay down to the DC level. The equalization pulse is characterized by its height V_{eq} and the voltage V_{end} reached at the end of the equalization pulse.

See the KNX Twisted Pair Standard (KNX TP1−256) for more detailed KNX information.

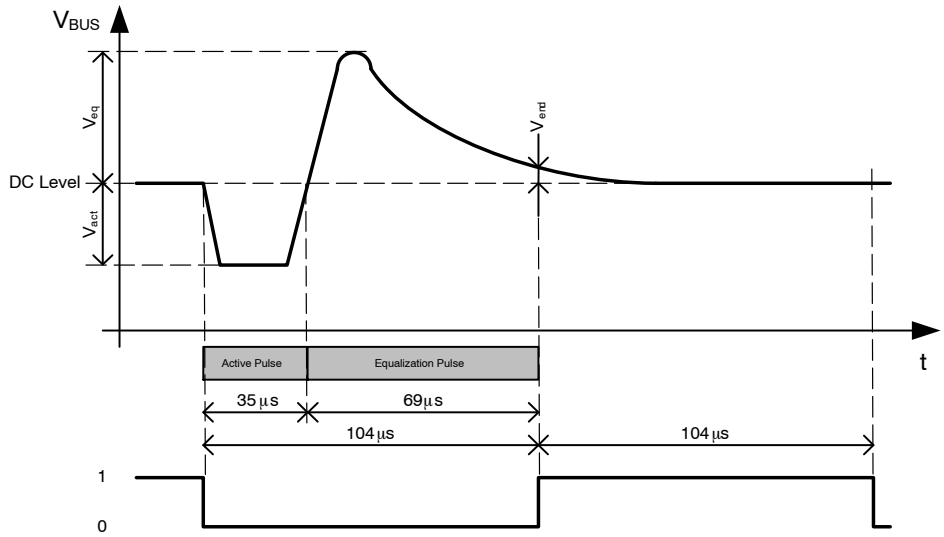

Figure 10. KNX Bus Voltage versus Digital Value

KNX Bus Transmitter

The purpose of the transmitter is to produce an active pulse (see Figure 10) between 6 V and 9 V regardless of the bus impedance (Note 1). In order to do this the transmitter will sink as much current as necessary until the bus voltage drops by the desired amount. The transmitter will produce an active pulse whenever the TX pin is brought high. It is up to the microcontroller to provide the bit−level coding and provide the correct active pulse duration.

KNX Bus Receiver

The receiver detects the beginning and the end of the active pulse. The detection threshold for the start of the active pulse is −0.45 V (typ.) below the average bus voltage. The detection threshold for the end of the active pulse is −0.2 V (typ.) below the average bus voltage giving a hysteresis of 0.25 V (typ.). The result of this detection is available as a pulse on the RXD pin.

Bus Coupler

The role of the bus coupler is to extract the DC voltage from the bus and provide a stable voltage supply for the purpose of powering the NCN5110. This stable voltage supplied by the bus coupler is called VFILT, and will follow the average bus voltage. The bus coupler also makes sure that the current drawn from the bus changes very slowly. For this a large filter capacitor is used on the VFILT−pin. Abrupt load current steps are absorbed by the filter capacitor. Long−term stability requires that the average bus coupler input current is equal to the average (bus coupler) load current. This is shown by the parameter $\Delta I_{coupler}/\Delta t$, which indicated the bus current slope limit. The bus coupler will also limit the current to a maximum of $I_{coupler_lim}$. At startup, this current limit is increased to $I_{coupler_lim,startup}$ to allow for fast charging of the VFILT bulk capacitance.

There are 4 conditions that determine the dimensioning of the VFILT capacitor.

First, the capacitor value should be between 12.5 µF and 4000 µF to garantuee proper operation of the part.

The next requirement on the VFILT capacitor is determined by the startup time of the system. According to the KNX specification, the total startup time must be below 10s. This time is comprised of the time to charge the VFILT capacitor to 12 V (where the DCDC convertor becomes operatonal) and the startup time of the rest of the system $t_{startup,system}$. This gives the following formula:

1. Maximum bus impedance is specified in the KNX Twisted Pair Standard

$$C < \frac{\left(10s - t_{startup,system}\right) \times I_{coupler_lim,startup}}{VFILTH}$$

The third limit on VFILT capacitor value is the required capacitor value to filter out current steps ΔI_{step} of the system without going into reset.

$$C > \frac{\Delta I_{step}^{2}}{\left(2 \times \left(V_{BUS1} - V_{coupler_drop} - V_{FILTL}\right) \times I_{slope}\right)}$$

The last condition on the size of VFILT is the desired warning time twarning between SAVEB and RESETB in case the bus voltage drops away. This is determined by the current consumption of the system Isystem.

$$C > \frac{I_{system} \times \left(t_{warning} + t_{busfilter}\right)}{\left(V_{BUS1} - V_{coupler_drop} - V_{FILTL}\right)}$$

The bus coupler is implemented as a linear voltage regulator. For efficiency purpose, the voltage drop over the bus coupler is kept minimal (see Table 4).

KNX Impedance Control

The impedance control circuit defines the impedance of the bus device during the active and equalization pulses. The impedance can be divided into a static and a dynamic component, the latter being a function of time. The static impedance defines the load for the active pulse current and the equalization pulse current. The dynamic impedance is produced by a block, called an equalization pulse generator, that reduces the device current consumption (i.e. increases the device impedance) as a function of time during the equalization phase so as to return energy to the bus.

Fixed and Adjustable DC−DC Converter

The device contains two DC−DC buck converters, both supplied from VFILT.

DC1 provides a fixed voltage of 3.3 V. This voltage is used as an internal low voltage supply (V_{DDA} and V_{DDD}) but can also be used to power external devices (VDD1−pin). DC1 is automatically enabled during the power−up procedure (see Analog State Diagram, p19).

DC2 provides a programmable voltage by means of an external resistor divider. It is not used as an internal voltage supply making it not mandatory to use this DC−DC converter (if not needed, tie the VDD2MV pin to VDD1).

DC2 will only be enabled when the nDC2EN pin is pulled low. When nDC2EN is pulled to VDDD, the DC2 controller is disabled.

The voltage divider can be calculated as follows:

$$R_4 = R_5 \times \frac{V_{DD2} - 1.2}{1.2} \qquad \text{(eq. 1)}$$

Both DC−DC converters make use of slope control to improve EMC performance (see Table 5). To operate DC1 and DC2 correctly, the voltage on the VIN−pin should be higher than the highest value of DC1 and DC2.

Although both DC−DC converters are capable of delivering 100 mA, the maximum current capability will not always be usable. One always needs to make sure that the KNX bus power consumption stays within the KNX specification. The maximum allowed current for the DC−DC converters and V20V regulator can be estimated as next:

$$\frac{V_{BUS} \times \left(I_{BUS} - I_{20V}\right)}{2 \times \left[\left(V_{DD1} \times I_{DD1}\right) + \left(V_{DD2} \times I_{DD2}\right)\right]} \geq 1 \qquad \text{(eq. 2)}$$

I_{BUS} will be limited by the KNX standard and should be lower or equal to $I_{coupler}$ (see Table 4). Minimum V_{BUS} is 20 V (see KNX standard). V_{DD1} and V_{DD2} can be found back in Table 4. I_{DD1}, I_{DD2} and I_{20V} must be chosen in a correct way to be in line with the KNX specification (Note 2).

Although DC2 can operate up to 21 V, it will not be possible to generate this 21 V under all operating conditions. See application note AND9135 for defining the optimum inductor and capacitor of the DC−DC converters. When using low series resistance output capacitors on DC2, it is advised to split the current sense resistor as shown in Figure 12 to reduce ripple current for low load conditions.

V20V Regulator

This is the 20 V low drop linear voltage regulator used to supply external devices. As it draws current from VFILT, this current is seen without any power conversion directly at the VBUS1 pin.

The V20V regulator is enabled by pulling the nV20VEN pin low. When the nV20VEN pin is pulled high, the 20V regulator is disabled. When the V20V regulator is not used, no load capacitor needs to be connected (see C7 of Figure 9). Connect V20V−pin with VFILT−pin in this case.

The 20 V regulator has a current limit that depends on the FANIN resistor value. In Table 4, the typical value of the current limit at startup is given as I_{20V_lim}.

Xtal Oscillator

An analog oscillator cell generates an optional clock of 16 MHz.

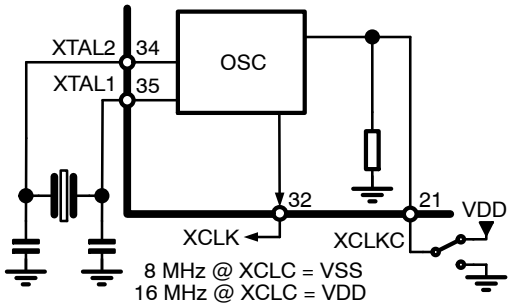

Figure 11. XTAL Oscillator

The XCLK−pin can be used to supply a clock signal to the host controller.

2. The formula is for a typical KNX application. It's only given as guidance and does not guarantee compliance with the KNX standard.

After power−up, a 4 MHz (Note 3) clock signal will be present on the XCLK−pin during Stand−By. When Normal State is entered, a 8 or 16 MHz clock signal will be present on the XCLK−pin. See also Figure 14. To output an 8 MHz clock on the XCLK pin, the XCLKC pin must be pulled to ground. When the XCLKC pin is pulled up to V_{DDD}, the XCLK pin will output a 16 MHz clock signal.

When Normal State is left and Stand−By State is re−entered due to an issue different than an Xtal issue, the 8 or 16 MHz clock signal will still be present on the XCLK−pin during the Stand−By State. If however Stand−By is entered from Normal State due to an Xtal issue, the 4 MHz clock signal will be present on the XCLK−pin. See also Table 7.

FANIN−pin

The FANIN−pin defines the maximum allowed bus current and bus current slopes. If the FANIN−pin is kept floating, pulled up to V_{DD}, or pulled down with a resistance higher than 250 kΩ, NCN5110 will limit the KNX bus current slopes to 0.5 mA/ms at all times. NCN5110 will also limit the KNX bus current to 30 mA during start−up. During normal operation, NCN5110 is capable of taking 10.6 mA (= $I_{coupler}$) from the KNX bus for supplying external loads (DC1, DC2 and V20V).

If the FANIN−pin is pulled to ground with a resistance smaller than 2 kΩ the operation is similar as above with the exception that the KNX bus current slopes will be limited to 1 mA/ms at all times, the KNX bus current will be limited to 60 mA during start−up and up to 20.5 mA ($I_{coupler}$) can be taken from the KNX bus during normal operation. When the FANIN−pin is pulled to ground with a resistance between 10 kΩ and 93.1 kΩ, the current slope and current limit are defined by the values from Table 4. For different resistor values, the typical current limit can be approximated by the formula $I_{bus} = 0.0004 + 434/R_6$ A. Using different resistor values is, however, not recommended.

Definitions for Start−Up and Normal Operation (as given above) can be found in the KNX Specification.

RESETB− and SAVEB−pin

The RESETB signal can be used to keep the host controller in a reset state. When RESETB is low this indicates that the bus voltage is too low for normal operation and that the fixed DC−DC converter has not started up. It could also indicate a Thermal Shutdown (TSD). The RESETB signal also indicates if communication between host and NCN5110 is possible.

The SAVEB signal indicates correct operation. When SAVEB goes low, this indicates a possible issue (loss of bus power or too high temperature) which could trigger the host controller to save critical data or go to a save state. SAVEB goes low immediately when VFILT goes below 14 V (due to sudden large current usage) or after 2 ms when VBUS goes below 20 V. RESETB goes low when VFILT goes below 12 V.

RESETB− and SAVEB−pin are open−drain pins with an internal pull−up resistor to V_{DDD}.

Voltage Supervisors

NCN5110 has different voltage supervisors monitoring VBUS, VFILT, VDD2 and V20V. The general function of a voltage supervisor is to detect when a voltage is above or below a certain level. The levels for the different voltages monitored can be found back in Table 4 (see also Figures 4, 5, 6 and 7).

Depending on the voltage supervisor outputs, the device can enter different states (see Analog State Diagram, p19).

3. The 4 MHz clock signal is internally generated and will be less accurate as the crystal generated clock signal of 8 or 16 MHz.

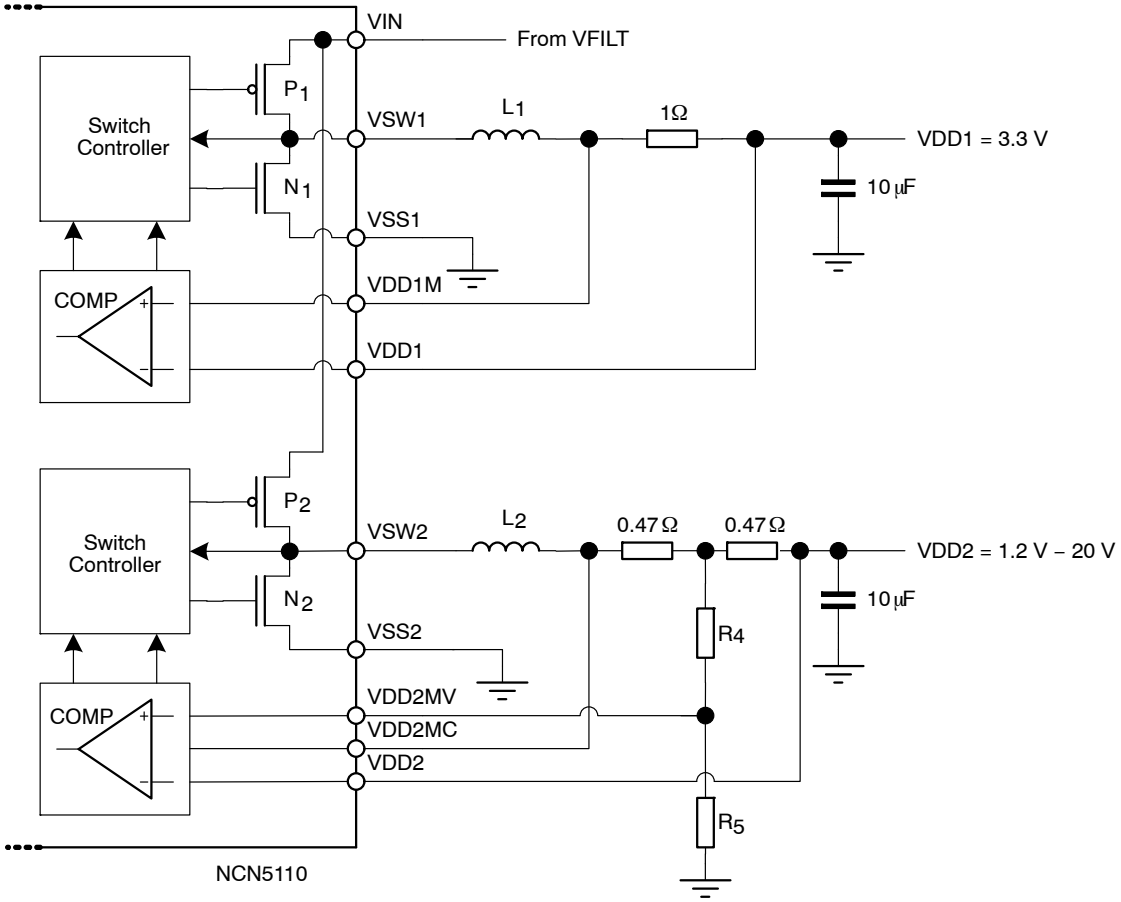

Figure 12. Fixed (VDD1) and Adjustable (VDD2) DC−DC Converter

Table 7. STATUS OF SEVERAL BLOCKS DURING THE DIFFERENT (ANALOG) STATES

State	Osc	XCLK	VDD1	VDD2/V20V	COMMUNICATION	KNX
Reset	Off	Off	Off	Off	Inactive	Inactive
Start−Up	Off	Off	Start−up	Off	Inactive	Inactive
Stand−By (Note 16)	Off	4 MHz	On	Start−Up	Active	Active
Stand−By (Note 17)	On (Note 19)	On (Note 19)	On	On (Note 20)	Active	Active
Normal	On	On (Note 18)	On	On	Active	Active

16. Only valid when entering Stand−By from Start−Up State.
17. Only valid when entering Stand−By from Normal State.
18. 8 MHz or 16 MHz depending on XCLKC.
19. 4 MHz signal if Stand−By state was entered due to oscillator issue. Otherwise 8 MHz or 16 MHz clock signal.
20. Only operational if Stand−By state was not entered due to VDD2 or V20V issue.

Temperature Monitor

The device produces an over−temperature warning (TW) and a thermal shutdown warning (TSD). Whenever the junction temperature rises above the Thermal Warning level (T_{TW}), the SAVEB−pin will go low to signal the issue to the host controller. When the junction temperature is above TW, the host controller should undertake actions to reduce the junction temperature and/or store critical data.

When the junction temperature reaches Thermal Shutdown (T_{TSD}), the device will go to the Reset State and the analog and digital power supply will be stopped (to protect the device). The device will stay in the Reset State as long as the temperature stays above T_{TSD}.

If the temperature drops below T_{TSD}, Start−Up State will be entered (see also Figure 13). At the moment VDD1 is back up and the OTP memory is read, Stand−By State will be entered and RESETB will go high. Once the temperature has dropped below T_{TW} and all voltages are high enough, Normal State will be entered. SAVEB will go high and KNX communication is again possible.

Figure 8 gives a better view on the temperature monitor.

Analog State Diagram

The analog state diagram of NCN5110 is given in Figure 13. The status of the DC−DC converters, V20V regulator and KNX communication during the different (analog) states is given in Table 7.

Figure 14 gives a detailed view on the start−up behavior of NCN5110. After applying the bus voltage, the filter capacitor starts to charge. During this Reset State, the current drawn from the bus is limited to $I_{coupler}$ (for details see the KNX Standards). Once the voltage on the filter capacitor reaches 10 V (typ.), the fixed DC−DC converter (powering VDDA) will be enabled and the device enters the Start−Up State. When V_{DD1} gets above 2.8 V (typ.), the OTP memory is read out to trim some analog parameters (OTP memory is not accessible by the user). When done, the Stand−By State is entered and the RESETB−pin is made high. When V_{FILT} is above V_{FILTH} DC2 and V20V will be started. When the VBUS−, VFILT−, VDD2− and V20V− monitors are ok, the Normal State will be entered and SAVEB−pin will go high.

Figure 15 gives a detailed view on the shut−down behavior. If the KNX bus voltage drops below V_{BUSL} for more than t_{bus_filter}, the Standy−By State is entered. SAVEB will go low to signal this. When VFILT drops below V_{FILTL}, DC2 and the V20V regulator will be switched off. When VFILT drops below 6.5 V (typ), DC1 will be switched off and V_{DD1} drops below 2.8 V (typ.) the device goes to Reset State (RESETB low).

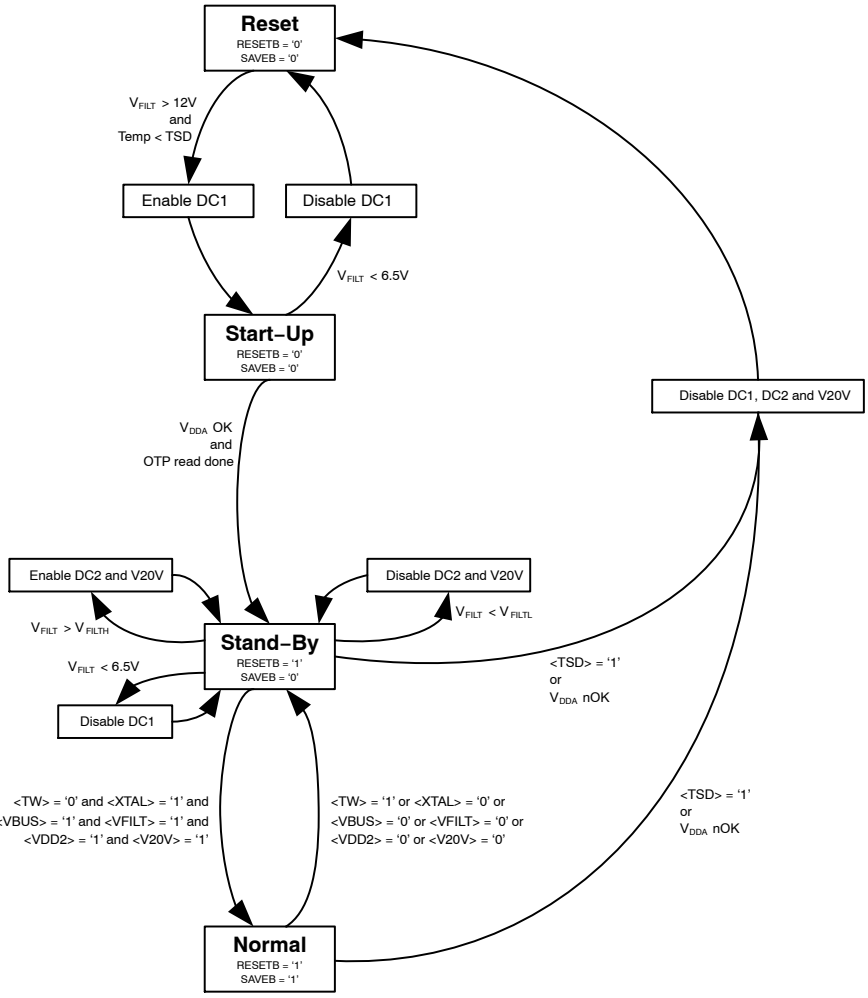

Remarks:
− <TW>, <XTAL>, <VBUS>, <VFILT>, <VDD2> and <V20V> are internal status bits
− <TSD> is an internal signal indicating a Thermal Shutdown. This internal signal cannot be read out.
− Although Reset State could be entered from Normal State on a TSD, Stand−By State will be entered first due to a TW.

Figure 13. Analog State Diagram

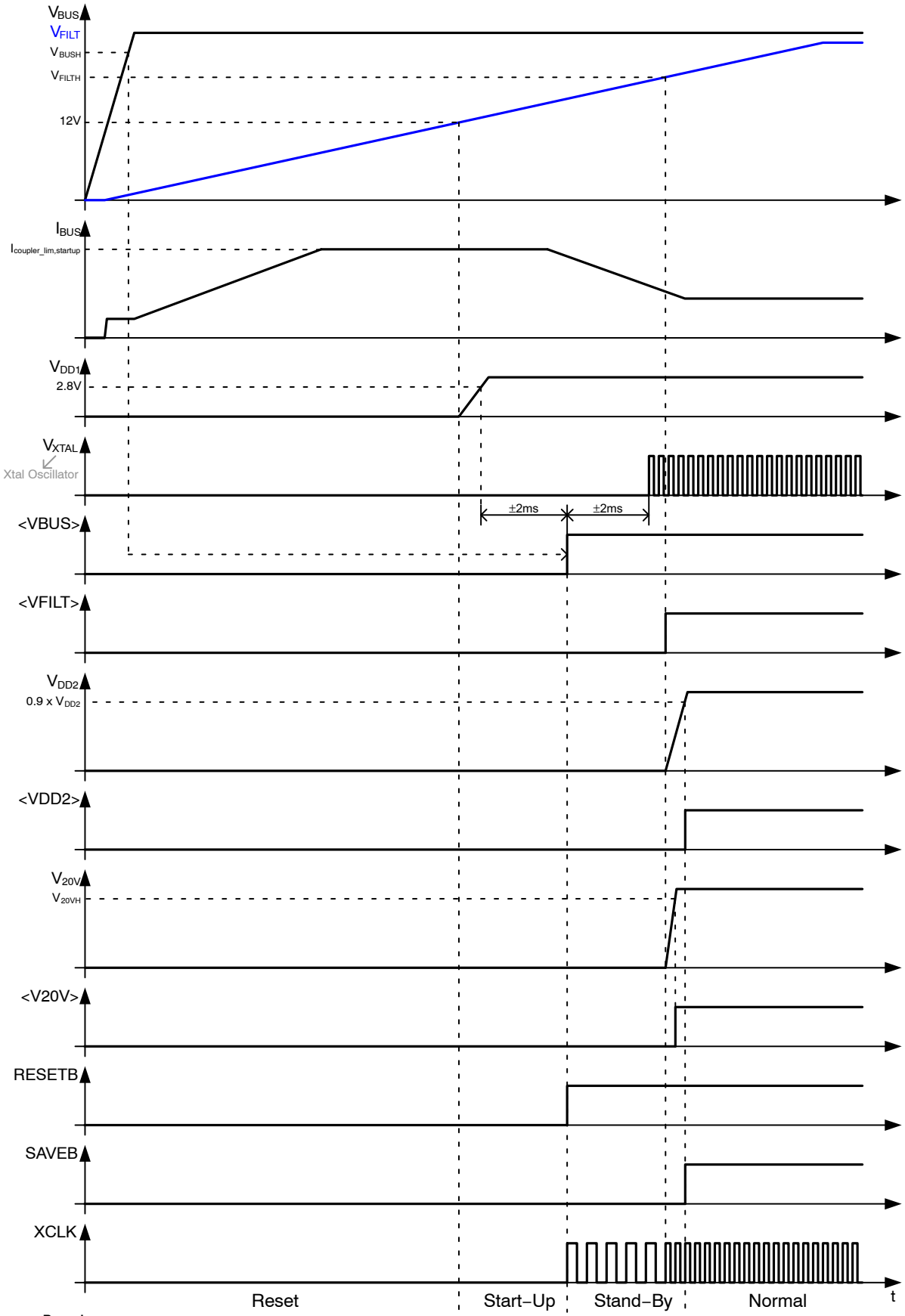

Remarks:
VDD1 directly connected to VDDA.

Figure 14. Start−Up Behavior

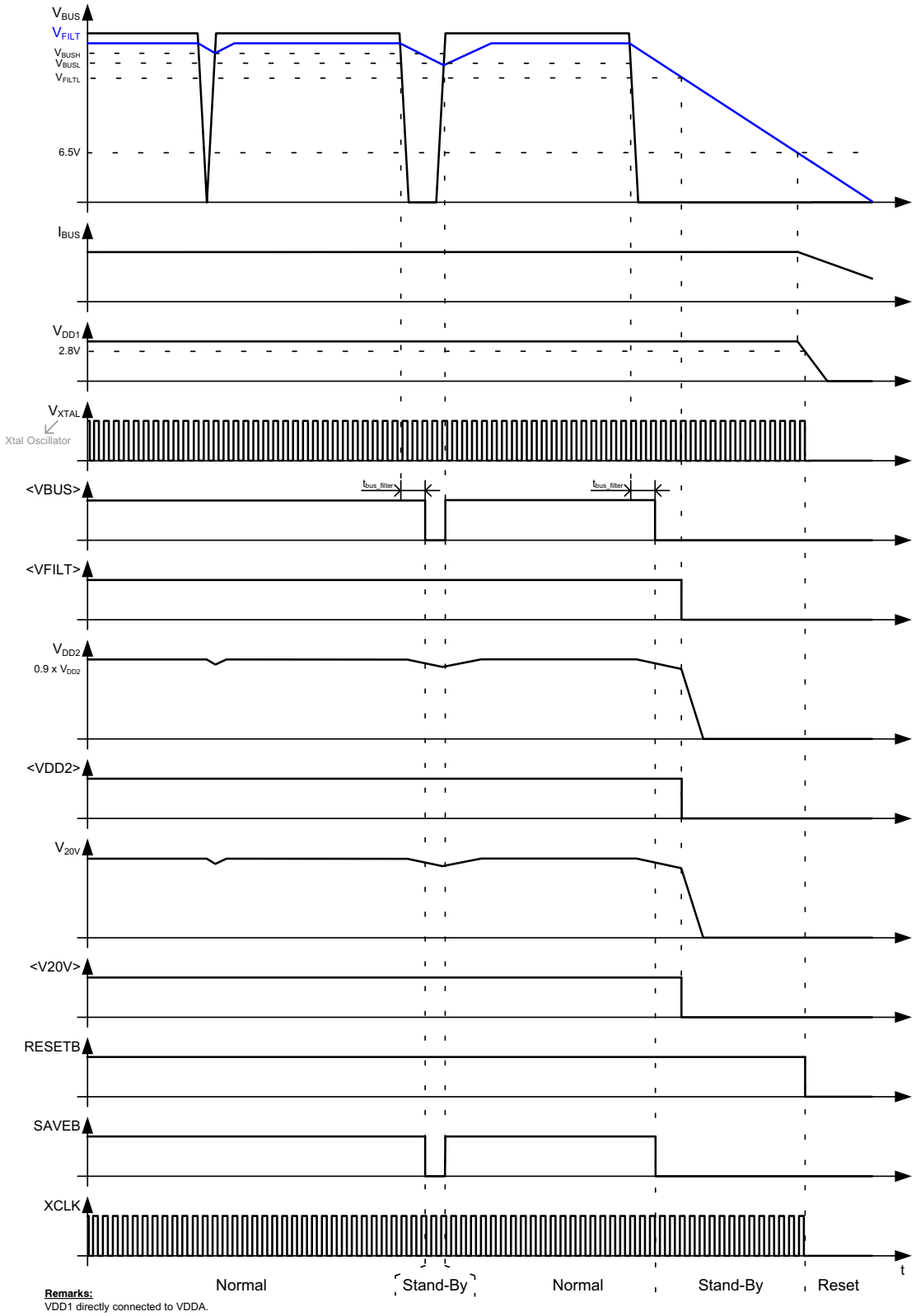

Figure 15. Shut−Down Behavior

Communication Interface

The NCN5110 communication pins (TxD and RxD) are connected immediately to the KNX transmitter/receiver. Bit level coding/decoding has to be done by the host controller. Keep in mind that the signals on the RXD− and TXD−pin are inverted. Figure 9 gives an application example.

Layout Recommendation

Take extra care to keep the trace inductance between VBUS1 net and CCP pin on the PCB as small as possible by maximizing the trace thickness and reducing the length. As a rule of thumb, keep the trace length below approximately 5 mm.

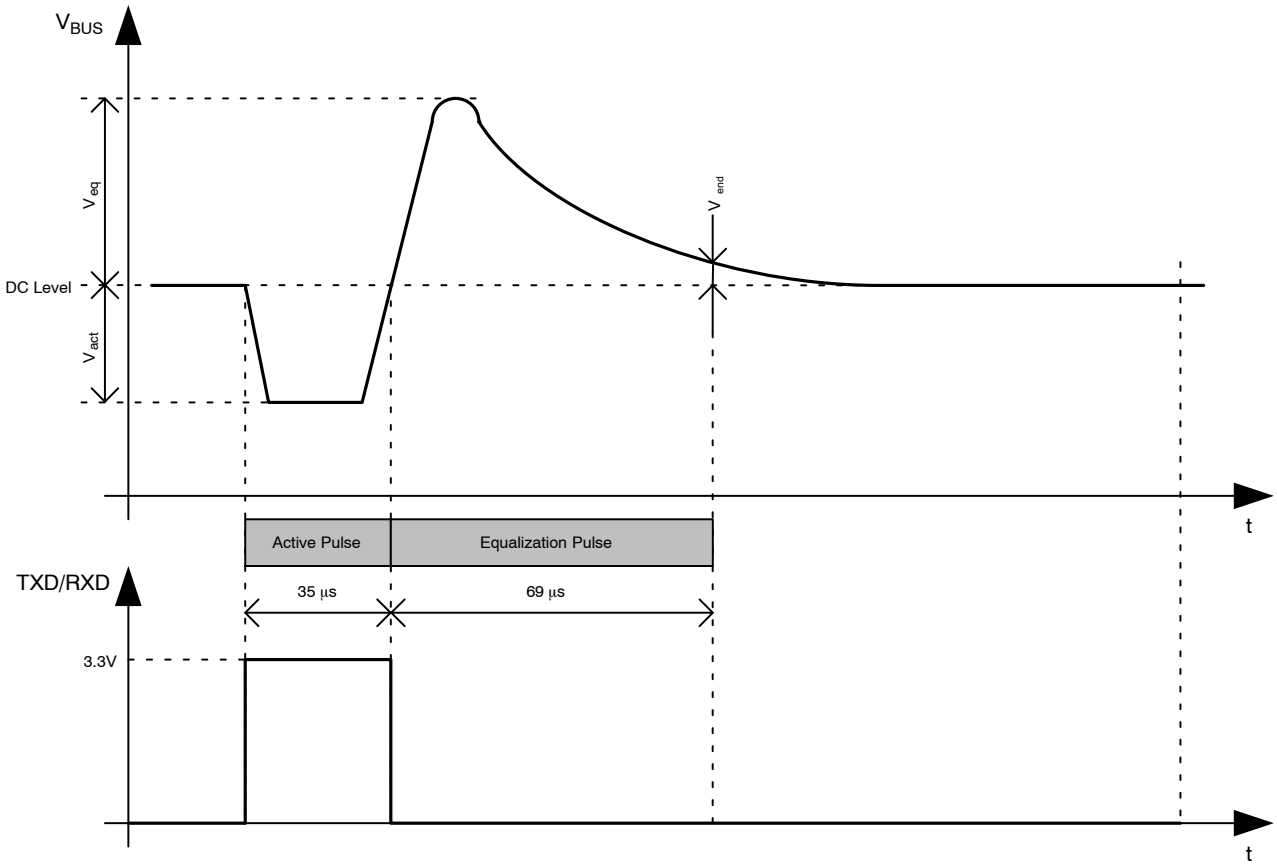

Figure 16. Bus Communication and the Corresponding Voltage Levels on RxD and TxD

PACKAGE THERMAL CHARACTERISTICS

The NCN5110 is available in a QFN40 package. For cooling optimizations, the QFN40 has an exposed thermal pad which has to be soldered to the PCB ground plane. The ground plane needs thermal vias to conduct the heat to the bottom layer.

Figure 17 gives an example of good heat transfer. The exposed thermal pad is soldered directly on the top ground layer (left picture of Figure 17). It‘s advised to make the top ground layer as large as possible (see arrows Figure 17). To improve the heat transfer even more, the exposed thermal pad is connected to a bottom ground layer by using thermal vias (see right picture of Figure 17). It‘s advised to make this bottom ground layer as large as possible and with as less as possible interruptions.

For precise thermal cooling calculations the major thermal resistances of the device are given (Table 4). The thermal media to which the power of the devices has to be given are:

– Static environmental air (via the case)
– PCB board copper area (via the exposed pad)

The major thermal resistances of the device are the Rth from the junction to the ambient (Rth_{ja}) and the overall Rth from the junction to exposed pad (Rth_{jp}). In Table 4 one can find the values for the Rth_{ja} and Rth_{jp}, simulated according to JESD−51. The Rth_{ja} for 2S2P is simulated conform JEDEC JESD−51 as follows:

– A 4−layer printed circuit board with inner power planes and outer (top and bottom) signal layers is used
– Board thickness is 1.46 mm (FR4 PCB material)
– The 2 signal layers: 70 µm thick copper with an area of 5500 mm^2 copper and 20% conductivity
– The 2 power internal planes: 36 µm thick copper with an area of 5500 mm^2 copper and 90% conductivity

The Rth_{ja} for 1S0P is simulated conform to JEDEC JESD−51 as follows:

– A 1−layer printed circuit board with only 1 layer
– Board thickness is 1.46 mm (FR4 PCB material)
– The layer has a thickness of 70 µm copper with an area of 5500 mm^2 copper and 20% conductivity

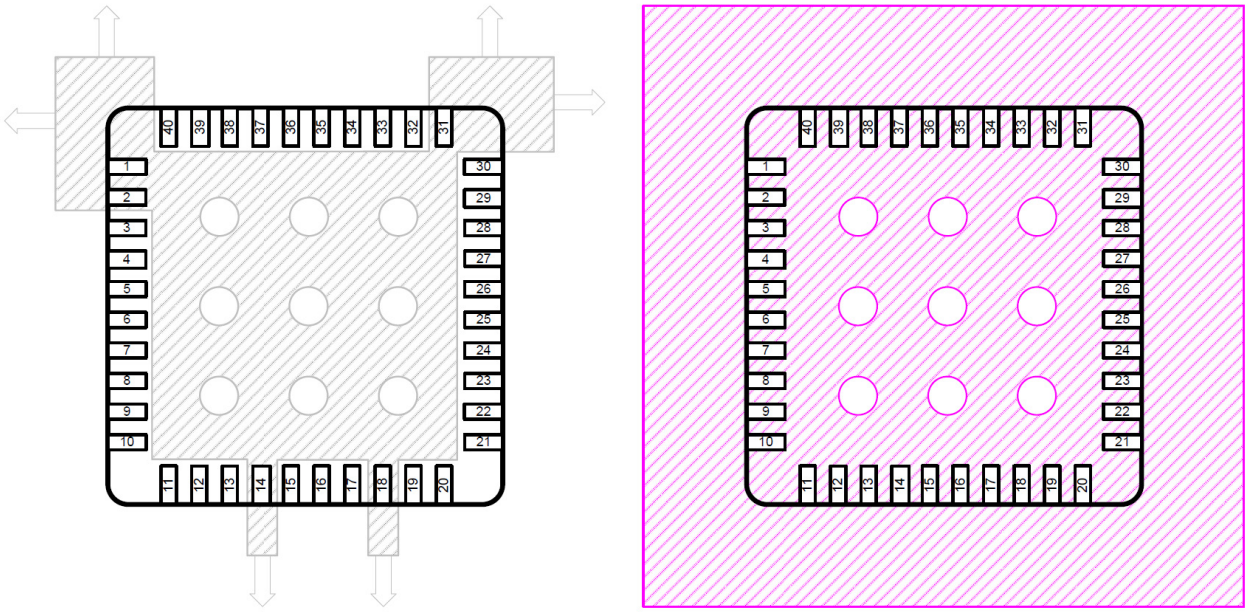

Figure 17. PCB Ground Plane Layout Condition
(left picture displays the top ground layer, right picture displays the bottom ground layer)

ORDERING INFORMATION

Device Number	Temperature Range	Package	Shipping†
NCN5110MNTWG	−40°C to 105°C	QFN−40 (Pb−Free)	3,000 / Tape & Reel

†For information on tape and reel specifications, including part orientation and tape sizes, please refer to our Tape and Reel Packaging Specification Brochure, BRD8011/D.

KNX and the KNX Logos are trademarks of KNX Association.

QFN40 6x6, 0.5P
CASE 485AU−01
ISSUE O

DATE 01 JUL 2008

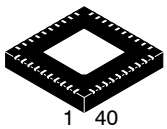

SCALE 2:1

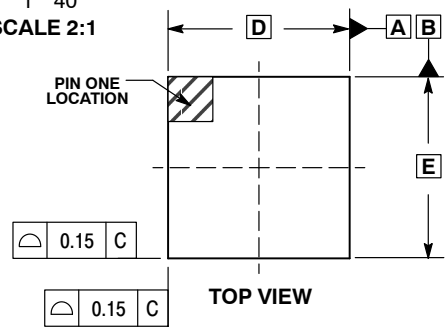

TOP VIEW

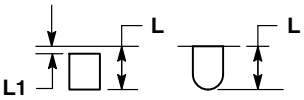

DETAIL A
OPTIONAL CONSTRUCTIONS

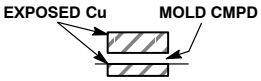

DETAIL B
OPTIONAL CONSTRUCTIONS

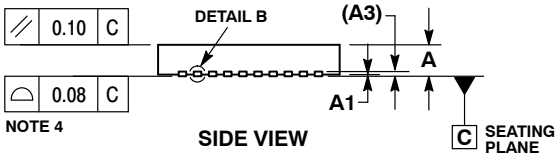

SIDE VIEW

NOTES:
1. DIMENSIONING AND TOLERANCING PER ASME Y14.5M, 1994.
2. CONTROLLING DIMENSIONS: MILLIMETERS.
3. DIMENSION b APPLIES TO PLATED TERMINAL AND IS MEASURED BETWEEN 0.15 AND 0.30mm FROM TERMINAL TIP.
4. COPLANARITY APPLIES TO THE EXPOSED PAD AS WELL AS THE TERMINALS.

	MILLIMETERS	
DIM	MIN	MAX
A	0.80	1.00
A1	0.00	0.05
A3	0.20 REF	
b	0.18	0.30
D	6.00 BSC	
D2	3.10	3.30
E	6.00 BSC	
E2	3.10	3.30
e	0.50 BSC	
K	0.20 MIN	
L	0.30	0.50
L1	−−−	0.15

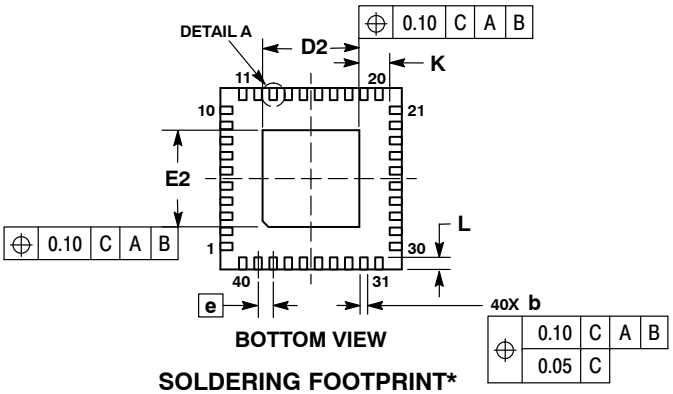

BOTTOM VIEW

GENERIC MARKING DIAGRAM*

XXX = Specific Device Code
A = Assembly Location
WL = Wafer Lot
YY = Year
WW = Work Week
G = Pb−Free Package

*This information is generic. Please refer to device data sheet for actual part marking. Pb−Free indicator, "G" or microdot " ▪", may or may not be present.

SOLDERING FOOTPRINT*

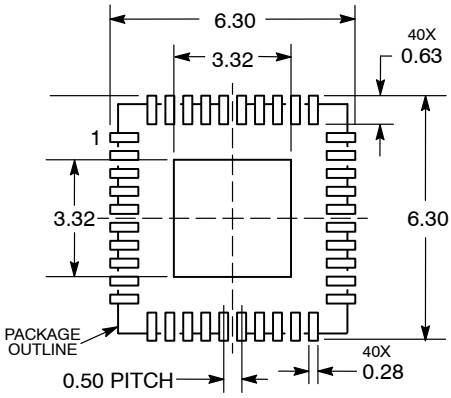

DIMENSIONS: MILLIMETERS

*For additional information on our Pb−Free strategy and soldering details, please download the ON Semiconductor Soldering and Mounting Techniques Reference Manual, SOLDERRM/D.

DOCUMENT NUMBER:	**98AON31154E**	Electronic versions are uncontrolled except when accessed directly from the Document Repository. Printed versions are uncontrolled except when stamped "CONTROLLED COPY" in red.
DESCRIPTION:	**QFN40, 6x6, 0.5P**	**PAGE 1 OF 1**

ON Semiconductor and ON are trademarks of Semiconductor Components Industries, LLC dba ON Semiconductor or its subsidiaries in the United States and/or other countries. ON Semiconductor reserves the right to make changes without further notice to any products herein. ON Semiconductor makes no warranty, representation or guarantee regarding the suitability of its products for any particular purpose, nor does ON Semiconductor assume any liability arising out of the application or use of any product or circuit, and specifically disclaims any and all liability, including without limitation special, consequential or incidental damages. ON Semiconductor does not convey any license under its patent rights nor the rights of others.

© Semiconductor Components Industries, LLC, 2019

onsemi, onsemi, and other names, marks, and brands are registered and/or common law trademarks of Semiconductor Components Industries, LLC dba "**onsemi**" or its affiliates and/or subsidiaries in the United States and/or other countries. **onsemi** owns the rights to a number of patents, trademarks, copyrights, trade secrets, and other intellectual property. A listing of **onsemi**'s product/patent coverage may be accessed at www.onsemi.com/site/pdf/Patent−Marking.pdf. **onsemi** reserves the right to make changes at any time to any products or information herein, without notice. The information herein is provided "as−is" and **onsemi** makes no warranty, representation or guarantee regarding the accuracy of the information, product features, availability, functionality, or suitability of its products for any particular purpose, nor does **onsemi** assume any liability arising out of the application or use of any product or circuit, and specifically disclaims any and all liability, including without limitation special, consequential or incidental damages. Buyer is responsible for its products and applications using **onsemi** products, including compliance with all laws, regulations and safety requirements or standards, regardless of any support or applications information provided by **onsemi**. "Typical" parameters which may be provided in **onsemi** data sheets and/or specifications can and do vary in different applications and actual performance may vary over time. All operating parameters, including "Typicals" must be validated for each customer application by customer's technical experts. **onsemi** does not convey any license under any of its intellectual property rights nor the rights of others. **onsemi** products are not designed, intended, or authorized for use as a critical component in life support systems or any FDA Class 3 medical devices or medical devices with a same or similar classification in a foreign jurisdiction or any devices intended for implantation in the human body. Should Buyer purchase or use **onsemi** products for any such unintended or unauthorized application, Buyer shall indemnify and hold **onsemi** and its officers, employees, subsidiaries, affiliates, and distributors harmless against all claims, costs, damages, and expenses, and reasonable attorney fees arising out of, directly or indirectly, any claim of personal injury or death associated with such unintended or unauthorized use, even if such claim alleges that **onsemi** was negligent regarding the design or manufacture of the part. **onsemi** is an Equal Opportunity/Affirmative Action Employer. This literature is subject to all applicable copyright laws and is not for resale in any manner.

ADDITIONAL INFORMATION

TECHNICAL PUBLICATIONS:
Technical Library: www.onsemi.com/design/resources/technical−documentation
onsemi Website: www.onsemi.com

ONLINE SUPPORT: www.onsemi.com/support
For additional information, please contact your local Sales Representative at
www.onsemi.com/support/sales