MPM3834C

2.75V to 6V, 3A, Ultra-Small Power Module with Ultra-Low Noise

DESCRIPTION

The MPM3834C is synchronous, step-down power module with an integrated inductor. The MPM3834C achieves 3A of continuous output current (I_{OUT}) from a 2.75V to 6V input voltage (V_{IN}) range, with excellent load and line regulation. The MPM3834C works in forced continuous conduction mode (FCCM) and has a small output voltage (V_{OUT}) ripple with one output capacitor. This makes the device well-suited for optical modules, FPGA, ASIC, and other applications requiring low ripple noise and a small PCB area.

V_{OUT} can be regulated to be as low as 0.6V. Only FB resistors, input capacitors, and output capacitors are required to complete the design. Constant-on-time control (COT) provides fast transient response, high efficiency, and easy loop stabilization.

Full protection features include cycle-by-cycle current limiting, short-circuit protection (SCP) with hiccup mode, and thermal shutdown.

The MPM3834C requires a minimal number of readily available, standard external components. It is available in an ultra-small ECLGA-14 (2.5mmx2.5mmx1.2mm) package.

FEATURES

- Wide 2.75V to 6V Operating Input Voltage (V_{IN}) Range
- Adjustable Output Voltage (V_{OUT}) from 0.6V
- Up to 3A Continuous Output Current (I_{OUT})
- 100% Duty Cycle in Dropout
- Up to 92% Efficiency with 3.3V to 1.8V
- Forced Continuous Conduction Mode (FCCM)
- Enable (EN) and Power Good (PG) for Power Sequencing
- Cycle-by-Cycle Over-Current Protection (OCP)
- Short-Circuit Protection (SCP) with Hiccup Mode
- Only Four External Components Required
- Available in an ECLGA-14 (2.5mmx2.5mmx1.2mm) Package

APPLICATIONS

- FPGA, ASIC, DSP Power
- Optical Modules
- LDO Replacements
- Power for Portable Products
- Storage (Solid-State Drives and Hard-Disk Drives)
- Space-Constrained Applications

All MPS parts are lead-free, halogen-free, and adhere to the RoHS directive. For MPS green status, please visit the MPS website under Quality Assurance. "MPS", the MPS logo, and "Simple, Easy Solutions" are trademarks of Monolithic Power Systems, Inc. or its subsidiaries.

TYPICAL APPLICATION

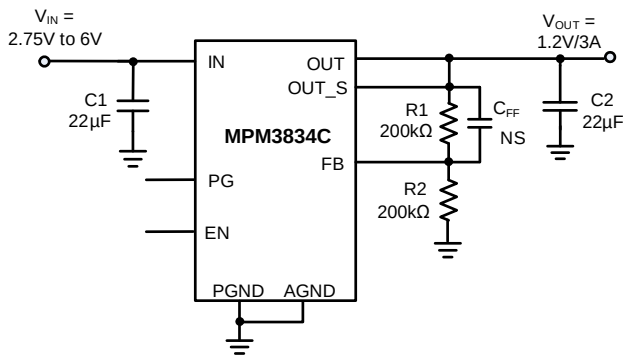

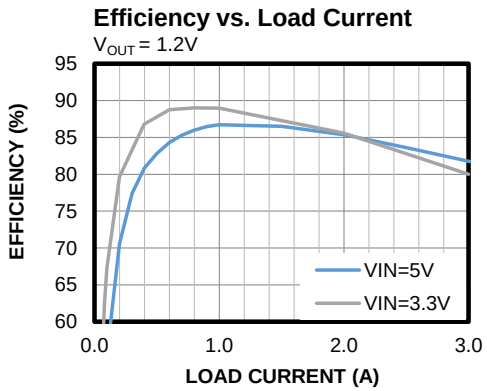

MPS Proprietary Information. Patent Protected. Unauthorized Photocopy and Duplication Prohibited.
© 2022 MPS. All Rights Reserved.

ORDERING INFORMATION

Part Number*	Package	Top Marking	MSL Rating
MPM3834CGPA	ECLGA-14 (2.5mmx2.5mm)	*See Below*	3

* For Tape & Reel, add suffix -Z (e.g. MPM3834CGPA-Z).

TOP MARKING

BTH
YWW
LLL

BTH: Product code of MPM3834CGPA
Y: Year code
WW: Week code
LLL: Lot number

PACKAGE REFERENCE

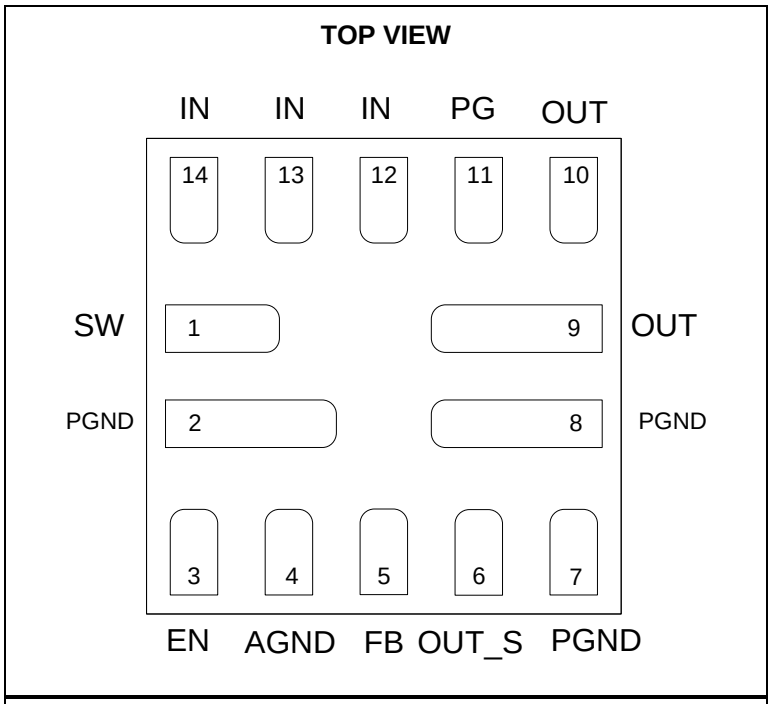

ECLGA-14 (2.5mmx2.5mm)

MPS Proprietary Information. Patent Protected. Unauthorized Photocopy and Duplication Prohibited.
© 2022 MPS. All Rights Reserved.

PIN FUNCTIONS

Pin #	Name	Description
1	SW	**SW test pin.** Float the SW pin.
2, 7, 8	PGND	**Power ground.**
3	EN	**On/off control.**
4	AGND	**Analog ground for the internal control circuit.** The AGND pin is not connected to PGND internally. Connect AGND to the PGND on the PCB layout.
5	FB	**Feedback**. Use an external resistor divider from the output to AGND, tapped to the FB pin, to set the output voltage (V_{OUT}).
6	OUT_S	**Output voltage sense.**
9, 10	OUT	**Power output.**
11	PG	**Power good indicator.** The output of the PG pin is an open drain with an internal pull-up resistor connected to the IN pin. PG is pulled up to IN when the FB voltage is within 10% of the regulation level; otherwise, PG is low.
12, 13, 14	IN	**Power input.**

ABSOLUTE MAXIMUM RATINGS (1)

V_{SW}.....
-0.3V (-5V for <10ns) to +6.5V (+10V for <10ns)
All other pins .....-0.3V to +6.5V
Continuous power dissipation (T_A = 25°C) (5)
ECLGA-14 (2.5mmx2.5mm) 2.2W
Junction temperature .....150°C
Lead temperature .....260°C
Storage temperature..... -65°C to +150°C

ESD Ratings

Human body model (HBM) 2000V
Charged device model (CDM) 2000V

Recommended Operating Conditions (2)

Operation input voltage range .....2.75V to 6V
Operating junction temp (T_J). ... -40°C to +125°C

Thermal Resistance (3) (4) (5) (6) (7)

ECLGA-14 (2.5mmx2.5mm)
θ_{JA} ..... 56.7°C/W
θ_{JC_TOP} ..... 6.85°C/W
θ_{JB} ..... 25.5°C/W

Notes:

1) Exceeding these ratings may damage the device.
2) The device is not guaranteed to function outside of its operating conditions.
3) θ_{JA} is the junction-to-ambient thermal resistance, θ_{JC_TOP} is the junction-to-case top thermal characterization parameter, and θ_{JB} is the junction-to-board thermal characterization parameter.
4) The thermal parameter is based on the test on the MPS evaluation board (T-EVM3834C-PA-00A) under a no airflow cooling condition in a standard enclosure. The board size is 5.1cmx5.1cm, 2 layers, of which top and bottom layer copper thickness is 2oz.
5) The maximum allowable power dissipation is a function of the maximum junction temperature, T_J (MAX), the junction-to-ambient thermal resistance, θ_{JA}, and the ambient temperature, T_A. The maximum allowable continuous power dissipation at any ambient temperature is calculated by P_D (MAX) = (T_J (MAX) - T_A) / θ_{JA}. Exceeding the maximum allowable power dissipation produces an excessive die temperature.
6) The junction-to-case top thermal characterization parameter, θ_{JC_TOP}, estimates the junction temperature in the real system, based on equation $T_I = \theta_{JC_TOP} \times P_{LOSS} + T_{CASE_TOP}$. Where P_{LOSS} is the entire loss of the module in real applications, and T_{CASE_TOP} is case top temperature
7) The junction-to-board thermal characterization parameter, θ_{JB}, estimation the junction temperature in the real system, based on equation $T_I = \theta_{JB} \times P_{LOSS} + T_{BOARD}$. Where P_{LOSS} is the entire power loss of the module in real applications, and T_{BOARD} is board temperature.

MPS Proprietary Information. Patent Protected. Unauthorized Photocopy and Duplication Prohibited.
© 2022 MPS. All Rights Reserved.

ELECTRICAL CHARACTERISTICS

V_{IN} = 3.6V, T_J = -40°C to +125°C [8], typical value is tested at T_J = 25°C, the over-temperature limit is guaranteed by characterization, unless otherwise noted.

Parameter	Symbol	Condition	Min	Typ	Max	Units
Feedback voltage	V_{FB}	2.75V ≤ V_{IN} ≤ 6V	591	600	609	mV
Feedback current	I_{FB}	V_{FB} = 0.6V		10		nA
Inductor value	L	Inductance value at 1MHz		0.47		μH
Dropout resistance	R_{DR}	100% on duty		75		mΩ
Switch leakage		V_{EN} = 0V, V_{IN} = 6V, V_{SW} = 0V and 6V, T_J = 25°C		0	2	μA
P-channel MOSFET peak current limit		T_J = 25°C	5	6		A
N-channel MOSFET valley current limit [8]				3.6		A
On time	t_{ON}	V_{IN} = 5V, V_{OUT} = 1.2V		185		ns
		V_{IN} = 3.6V, V_{OUT} = 1.2V		250		
Switching frequency	f_{SW}	V_{OUT} = 1.2V, I_{LOAD} = 1A		1250		kHz
Minimum off time [9]	$t_{MIN-OFF}$			100		ns
Minimum on time [9]	t_{MIN-ON}			80		ns
Soft-start time [9]	t_{SS-ON}			1.7		ms
Soft-stop time	t_{SS-OFF}			2		ms
Power good upper trip threshold	PG_OV	FB voltage in respect to the regulation		7		%
Power good lower trip threshold	PG_UV			-12		%
Power good delay				100		μs
Power good sink current capability	V_{PG_LO}	Sink 1mA			0.4	V
Power good logic high voltage	V_{PG_HI}	V_{IN} = 5V, V_{FB} = 0.6V	4			V
Power good internal pull-up resistor	R_{PG}			440		kΩ
Under-voltage lockout threshold rising			2.3	2.5	2.75	V
Under-voltage lockout threshold hysteresis				400		mV
EN input logic low voltage					0.3	V
EN input logic high voltage			1.2			V
EN input current		V_{EN} = 2V		2		μA
		V_{EN} = 0V		0		μA
Supply current (shutdown)		V_{EN} = 0V, T_J = 25°C		0	1	μA
Supply current (quiescent)		V_{EN} = 2V, V_{FB} = 0.63V, V_{IN} = 3.6V		500		μA

MPS Proprietary Information. Patent Protected. Unauthorized Photocopy and Duplication Prohibited.
© 2022 MPS. All Rights Reserved.

ELECTRICAL CHARACTERISTICS *(continued)*

V_{IN} = 3.6V, T_J = -40°C to +125°C [8], typical value is tested at T_J = 25°C, the over-temperature limit is guaranteed by characterization, unless otherwise noted.

Parameter	Symbol	Condition	Min	Typ	Max	Units
Converter System [9]						
Output voltage range [9]			0.6		6	V
Recommended input capacitance [9]	C_{IN1}	V_{IN} = 3.6V, V_{OUT} = 1.2V, I_{OUT} = 2A	4.7	22		μF
Output capacitance [9]	C_{OUT1}	V_{IN} = 3.6V, V_{OUT} = 1.2V, I_{OUT} = 2A	10	22		μF
Output ripple [9]		V_{IN} = 3.6V, V_{OUT} = 1.2V, C_{OUT} = 22μF, I_{OUT} = 2A		8		mV
Efficiency [9]		V_{IN} = 3.6V, V_{OUT} = 1.2V, I_{OUT} = 2A		85		%
Load transient peak-to-peak voltage [9]	V_{P2P1}	V_{IN} = 3.6V, V_{OUT} = 1.2V, C_{OUT} = 22μF, I_{OUT} = 0A to 2A at 1A/μs			140	mV
Thermal shutdown [9]				150		°C
Thermal hysteresis [9]				30		°C

Notes:

8) Not tested in production. Guaranteed by over-temperature correlation.
9) Guaranteed by engineering sample characterization.

MPS Proprietary Information. Patent Protected. Unauthorized Photocopy and Duplication Prohibited.
© 2022 MPS. All Rights Reserved.

TYPICAL CHARACTERISTICS

Performance curves are tested on the evaluation board. V_{IN} = 5V, V_{OUT} = 1.2V, C_{IN} = 22μF, C_{OUT} = 22μF, T_A = 25°C, unless otherwise noted.

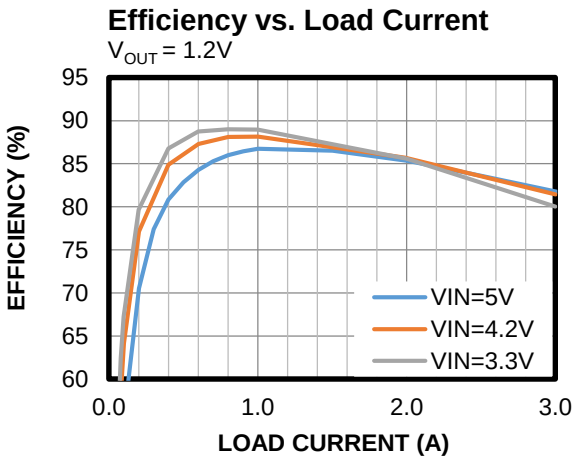

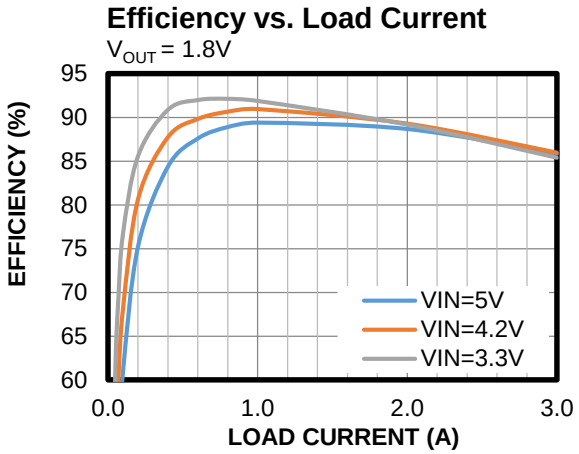

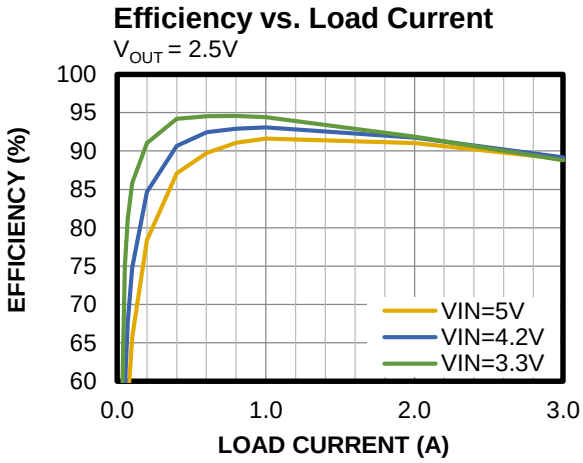

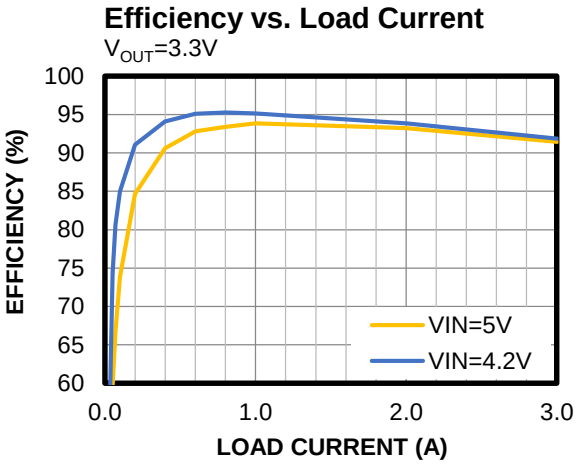

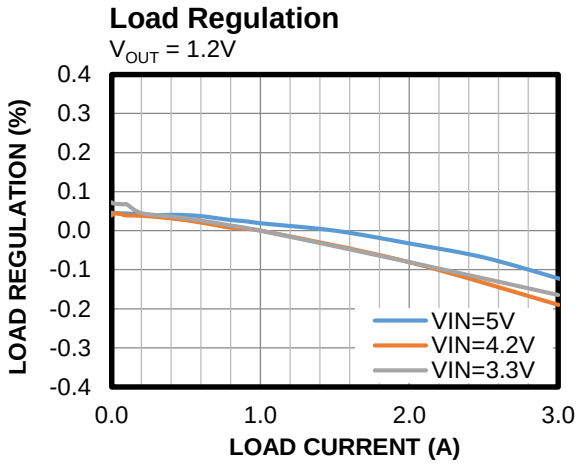

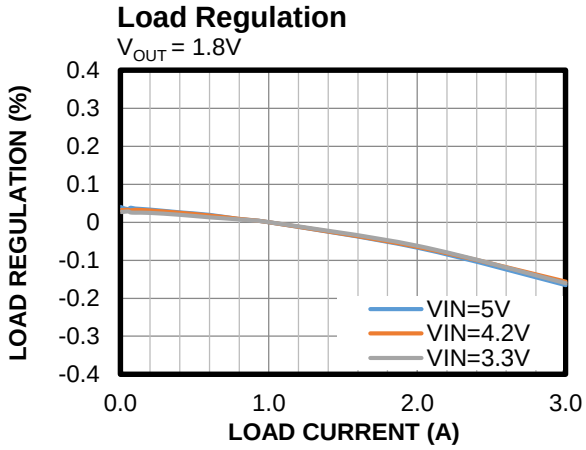

MPS Proprietary Information. Patent Protected. Unauthorized Photocopy and Duplication Prohibited.
© 2022 MPS. All Rights Reserved.

TYPICAL CHARACTERISTICS *(continued)*

Performance curves are tested on the evaluation board. V_{IN} = 5V, V_{OUT} = 1.2V, C_{IN} = 22µF, C_{OUT} = 22µF, T_A = 25°C, unless otherwise noted.

Load Regulation
V_{OUT} = 2.5V

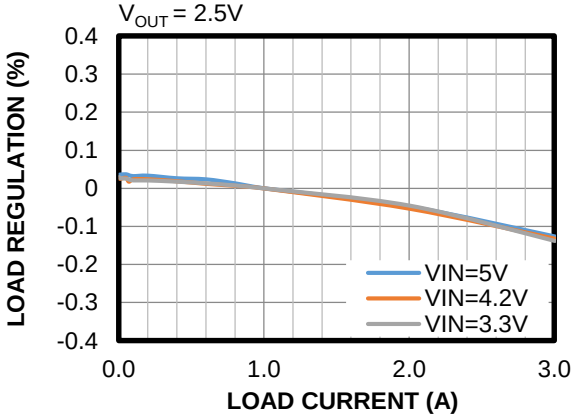

Load Regulation
V_{OUT} = 3.3V

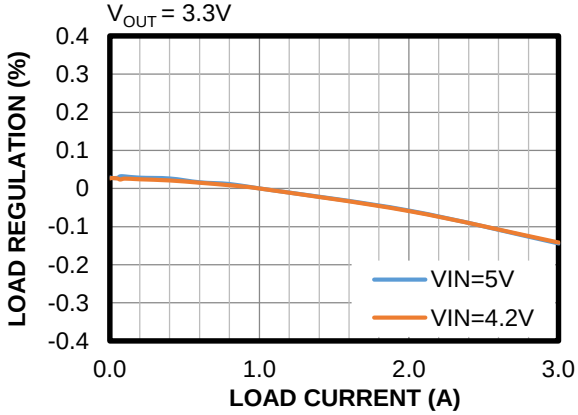

Line Regulation
V_{OUT} = 1.2V

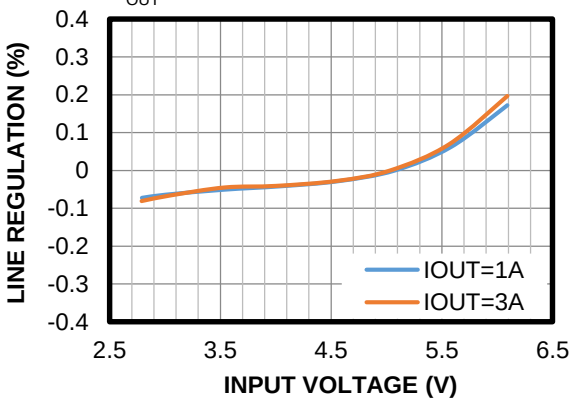

Line Regulation
V_{OUT} = 1.8V

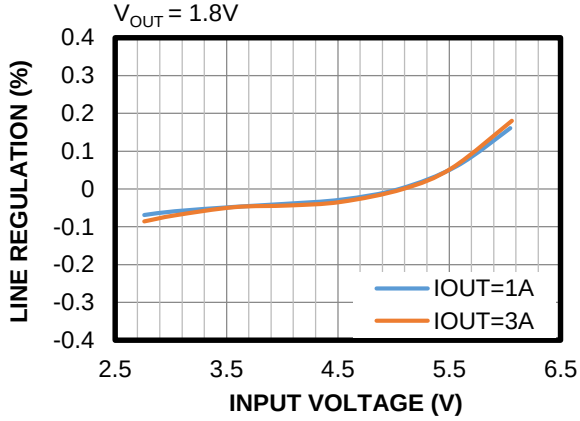

Line Regulation
V_{OUT} = 2.5V

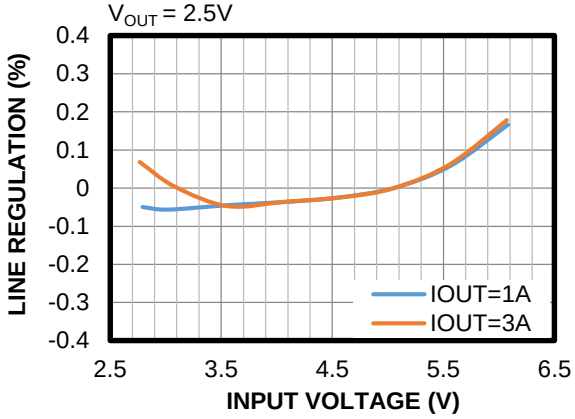

Line Regulation
V_{OUT} = 3.3V

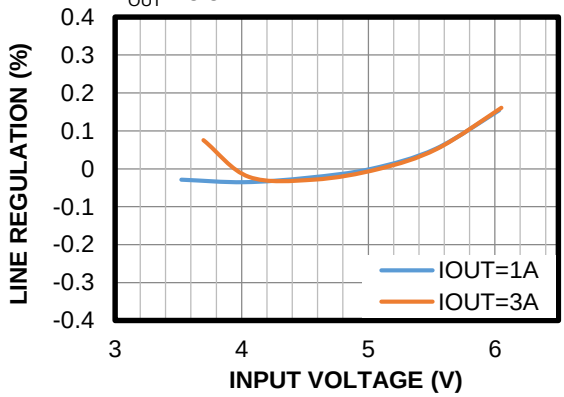

MPS Proprietary Information. Patent Protected. Unauthorized Photocopy and Duplication Prohibited.
© 2022 MPS. All Rights Reserved.

TYPICAL CHARACTERISTICS *(continued)*

Performance curves are tested on the evaluation board. V_{IN} = 5V, V_{OUT} = 1.2V, C_{IN} = 22µF, C_{OUT} = 22µF, T_A = 25°C, unless otherwise noted.

Thermal Result

I_{OUT} = 3A, 4-layer PCB

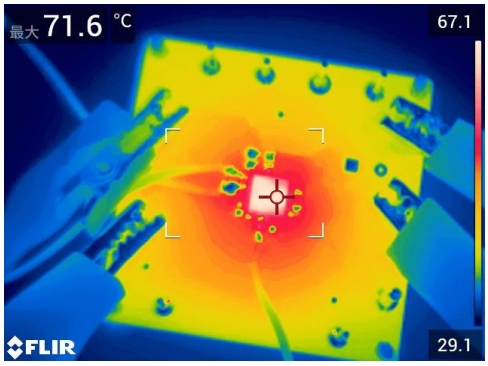

MPS Proprietary Information. Patent Protected. Unauthorized Photocopy and Duplication Prohibited.
© 2022 MPS. All Rights Reserved.

TYPICAL PERFORMANCE CHARACTERISTICS

Performance waveforms are tested on the evaluation board. V_{IN} = 5V, V_{OUT} = 1.2V, C_{IN} = 22µF, C_{OUT} = 22µF, T_A = 25°C, unless otherwise noted.

Steady State

V_{IN} = 5V, V_{OUT} = 1.2V, I_{OUT} = 0A

CH1: V_{OUT}/AC 20mV/div.
CH2: V_{IN} 5V/div.
CH3: Vsw 5V/div.
CH4: I_{OUT} 2A/div.

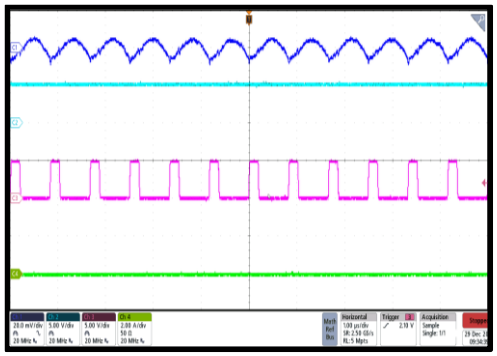

1µs/div.

Steady State

V_{IN} = 5V, V_{OUT} = 1.2V, I_{OUT} = 3A

CH1: V_{OUT}/AC 20mV/div.
CH2: V_{IN} 5V/div.
CH3: Vsw 5V/div.
CH4: I_{OUT} 2A/div.

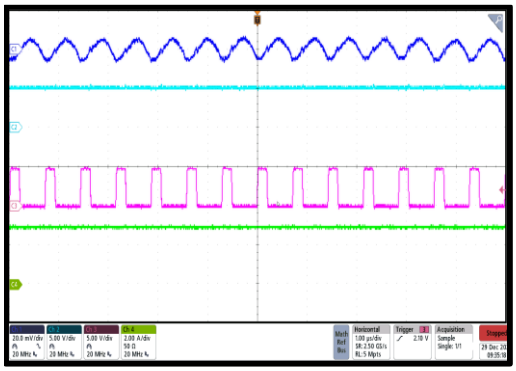

1µs/div.

Start-Up through VIN

V_{IN} = 5V, V_{OUT} = 1.2V, I_{OUT} = 0A

CH1: V_{OUT} 1V/div.
CH2: V_{IN} 5V/div.
CH3: Vsw 5V/div.
CH4: I_{OUT} 2A/div.

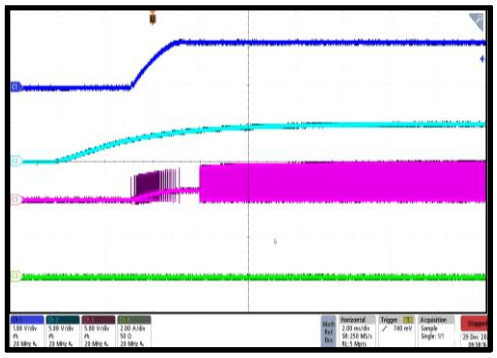

2ms/div.

Start-Up through VIN

V_{IN} = 5V, V_{OUT} = 1.2V, I_{OUT} = 3A

CH1: V_{OUT} 1V/div.
CH2: V_{IN} 5V/div.
CH3: Vsw 5V/div.
CH4: I_{OUT} 2A/div.

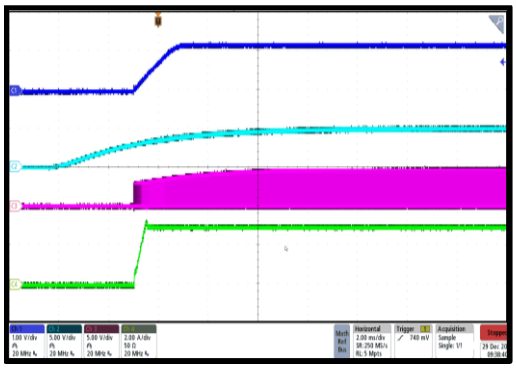

2ms/div.

Shutdown through VIN

V_{IN} = 5V, V_{OUT} = 1.2V, I_{OUT} = 0A

CH1: V_{OUT} 1V/div.
CH2: V_{IN} 5V/div.
CH3: Vsw 5V/div.
CH4: I_{OUT} 2A/div.

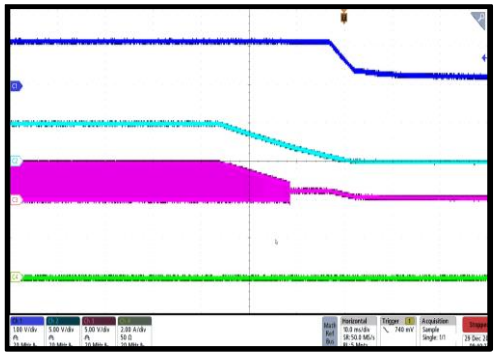

10ms/div.

Shutdown through VIN

V_{IN} = 5V, V_{OUT} = 1.2V, I_{OUT} = 3A

CH1: V_{OUT} 1V/div.
CH2: V_{IN} 5V/div.
CH3: Vsw 5V/div.
CH4: I_{OUT} 2A/div.

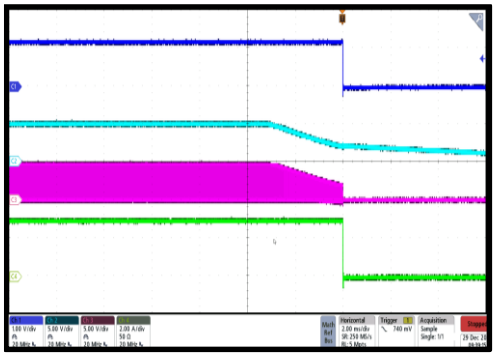

2ms/div.

MPS Proprietary Information. Patent Protected. Unauthorized Photocopy and Duplication Prohibited.
© 2022 MPS. All Rights Reserved.

TYPICAL PERFORMANCE CHARACTERISTICS *(continued)*

Performance waveforms are tested on the evaluation board. V_{IN} = 5V, V_{OUT} = 1.2V, C_{IN} = 22µF, C_{OUT} = 22µF, T_A = 25°C, unless otherwise noted.

Start-Up through EN

V_{IN} = 5V, V_{OUT} = 1.2V, I_{OUT} = 0A

CH1: V_{OUT} 1V/div.
CH2: V_{EN} 5V/div.
CH3: Vsw 5V/div.
CH4: I_{OUT} 2A/div.

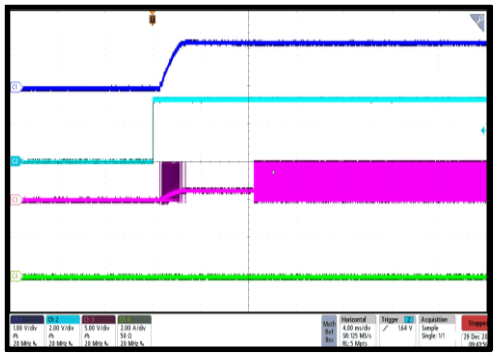

4ms/div.

Start-Up through EN

V_{IN} = 5V, V_{OUT} = 1.2V, I_{OUT} = 3A

CH1: V_{OUT} 1V/div.
CH2: V_{EN} 5V/div.
CH3: Vsw 5V/div.
CH4: I_{OUT} 2A/div.

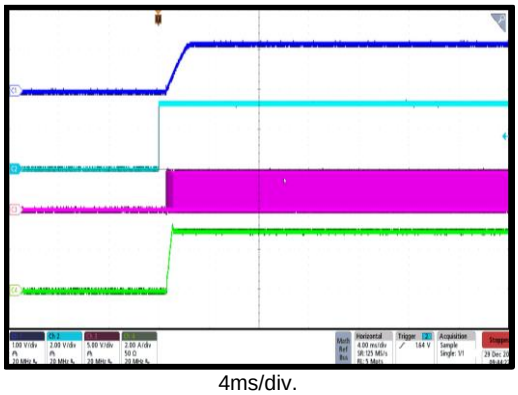

4ms/div.

Shutdown through EN

V_{IN} = 5V, V_{OUT} = 1.2V, I_{OUT} = 0A

CH1: V_{OUT} 1V/div.
CH2: V_{EN} 5V/div.
CH3: Vsw 5V/div.
CH4: I_{OUT} 2A/div.

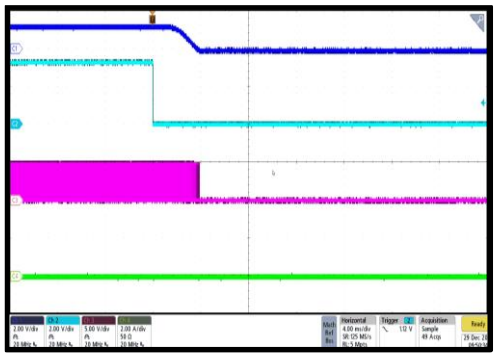

4ms/div.

Shutdown through EN

V_{IN} = 5V, V_{OUT} = 1.2V, I_{OUT} = 3A

CH1: V_{OUT} 1V/div.
CH2: V_{EN} 5V/div.
CH3: Vsw 5V/div.
CH4: I_{OUT} 2A/div.

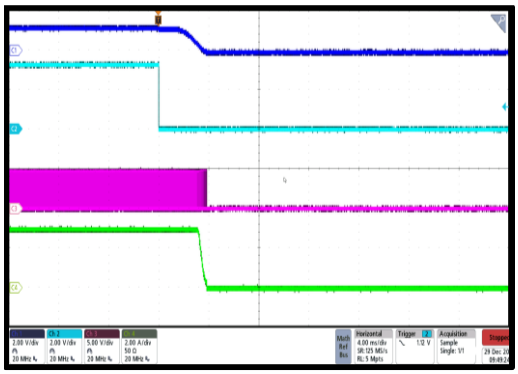

4ms/div.

SCP Entry

V_{IN} = 5V, V_{OUT} = 1.2V, I_{OUT} = 0A

CH1: V_{OUT} 1V/div.
CH2: V_{PG} 5V/div.
CH3: Vsw 5V/div.
CH4: I_{OUT} 10A/div.

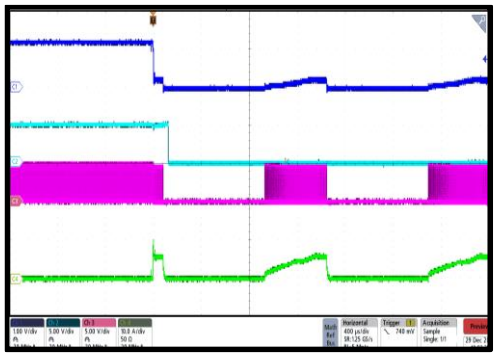

400µs/div.

SCP Recovery

V_{IN} = 5V, V_{OUT} = 1.2V, I_{OUT} = 0A

CH1: V_{OUT} 1V/div.
CH2: V_{PG} 5V/div.
CH3: Vsw 5V/div.
CH4: I_{OUT} 10A/div.

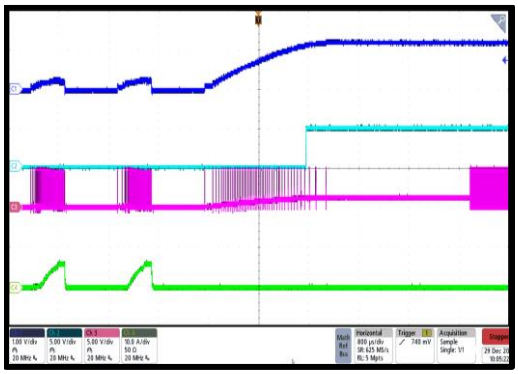

800µs/div.

MPS Proprietary Information. Patent Protected. Unauthorized Photocopy and Duplication Prohibited.
© 2022 MPS. All Rights Reserved.

TYPICAL PERFORMANCE CHARACTERISTICS *(continued)*

Performance waveforms are tested on the evaluation board. V_{IN} = 5V, V_{OUT} = 1.2V, C_{IN} = 22µF, C_{OUT} = 22µF, T_A = 25°C, unless otherwise noted.

SCP Entry

V_{IN} = 5V, V_{OUT} = 1.2V, I_{OUT} = 3A

CH1: V_{OUT} 1V/div.
CH2: V_{PG} 5V/div.
CH3: Vsw 5V/div.
CH4: I_{OUT} 10A/div.

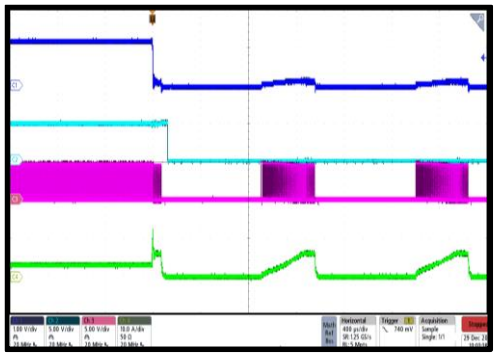

400µs/div.

SCP Recovery

V_{IN} = 5V, V_{OUT} = 1.2V, I_{OUT} = 3A

CH1: V_{OUT} 1V/div.
CH2: V_{PG} 5V/div.
CH3: Vsw 5V/div.
CH4: I_{OUT} 10A/div.

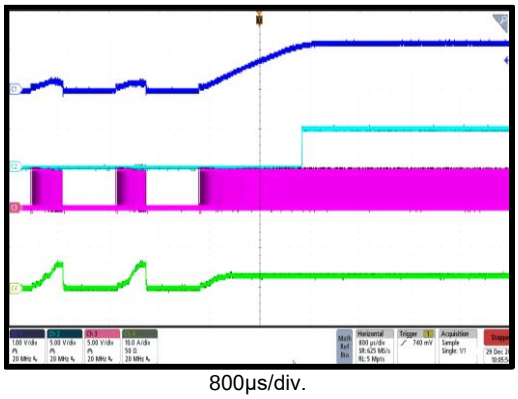

800µs/div.

Load Transient Response

V_{IN} = 5V, V_{OUT} = 1.2V, I_{OUT} = 0A to 3A, 2.5A/µs e-load

CH1: V_{OUT}/AC 50mV/div.
CH4: I_{OUT} 2A/div.

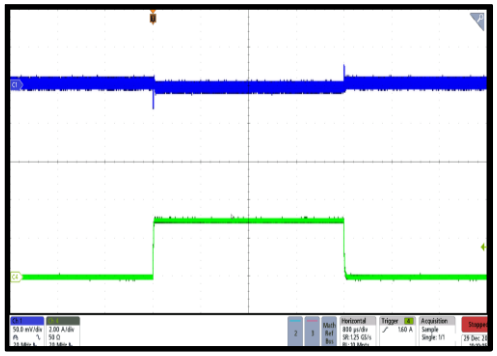

800µs/div.

Load Transient Response

V_{IN} = 5V, V_{OUT} = 1.2V, I_{OUT} = 1.5A to 3A, 2.5A/µs e-load

CH1: V_{OUT}/AC 50mV/div.
CH4: I_{OUT} 2A/div.

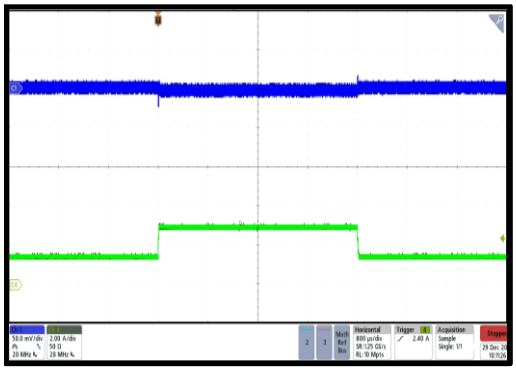

800µs/div.

MPS Proprietary Information. Patent Protected. Unauthorized Photocopy and Duplication Prohibited.
© 2022 MPS. All Rights Reserved.

FUNCTIONAL BLOCK DIAGRAM

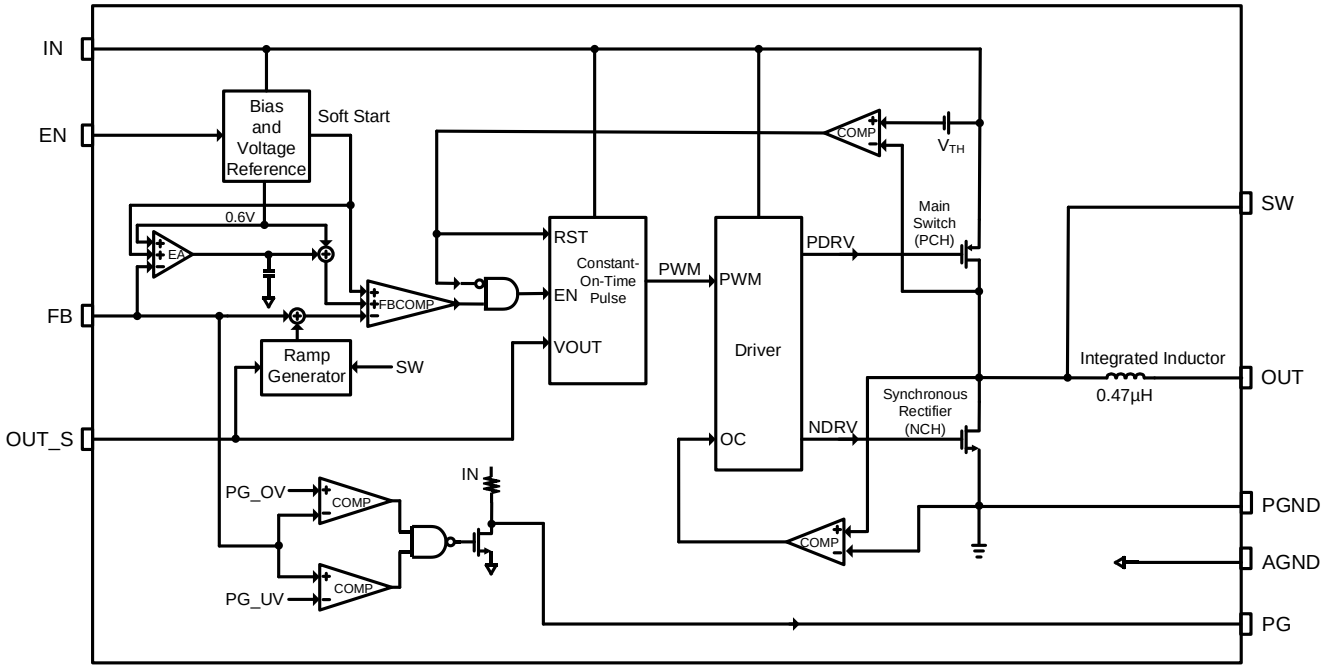

Figure 1: Functional Block Diagram

MPS Proprietary Information. Patent Protected. Unauthorized Photocopy and Duplication Prohibited.
© 2022 MPS. All Rights Reserved.

OPERATION

The MPM3834C comes in a small surface-mounted ECLGA-14 (2.5mmx2.5mmx1.2mm) package. The MPM3834C's integrated inductor simplifies the schematic and layout design. Only FB resistors, input capacitors, and output capacitors are required to complete the design. The MPM3834C uses constant-on-time (COT) control with input voltage feed-forward to stabilize the switching frequency (f_{SW}) across the full input range.

Constant-On-Time Control (COT)

Compared to fixed-frequency pulse-width modulation (PWM) control, COT control offers the advantage of a simpler control loop and faster transient response. By using input voltage feed-forward, the MPM3834C maintains a nearly constant f_{SW} across the input and output voltage ranges. The on time of the switching pulse can be estimated with Equation (1):

$$t_{ON} = \frac{V_{OUT}}{V_{IN}} \times 0.833\mu s \quad (1)$$

To prevent inductor current runaway during the load transition, the MPM3834C fixes the minimum off time at 230ns. This minimum off time limit does not affect operation during steady state.

Forced PWM Operation

The MPM3834C works in continuous conduction mode (CCM) to achieve a smaller output voltage ripple, load regulation, and load transient response across the full load range.

Enable (EN)

If the input voltage (V_{IN}) exceeds the under-voltage lockout (UVLO) threshold (typically 2.5V), the MPM3834C can be enabled by pulling EN above 1.2V. Leave EN floating or pull EN down to ground to disable the MPM3834C. There is an internal pull-down resistor connected from EN to ground.

Soft Start and Soft Shutdown

The MPM3834C has a built-in soft start that ramps up the output voltage at a controlled slew rate to prevent overshoots during start-up. The soft-start time is t_{SS-ON}.

When disabled, the MPM3834C ramps down the internal reference, so the load can discharge the output linearly. The soft-shutdown time is t_{SS-OFF}.

Power Good (PG) Indicator

The MPM3834C has an open-drain power good (PG) indication pin with a pull-up resistor (R_{PG}). When FB is within PG_OV and PG_UV, PG is pulled up to IN by the internal resistor. If the FB voltage is out of this window, PG is pulled down to ground by an internal MOSFET. The MOSFET has a maximum $R_{DS(ON)}$ of 100Ω.

Current Limit

The MPM3834C's high-side MOSFET (HS-FET) has a typical peak current limit, and the low-side MOSFET (LS-FET) has a valley current limit. When the HS-FET reaches its current limit, the HS-FET turns off, and the LS-FET turns on. When the current drops to the valley current limit threshold, the MPM3834C turns on the HS-FET again.

If the HS-FET reaches the peak current limit or the LS-FET reaches the valley current limit for 64 consecutive cycles, the MPM3834C initiates hiccup mode. It remains in hiccup mode until the current decreases. This prevents the inductor current from continuously rising and damaging components.

Short-Circuit Protection (SCP) and Recovery

If the output is shorted to GND, the current limit is triggered. If the current limit is triggered every for 64 consecutive cycles, the MPM3834C enters hiccup mode and disables the output power stage. The MPM3834C discharges the soft-start capacitor, then automatically attempts to soft start again. If the short-circuit condition remains after soft start ends, the MPM3834C repeats this operation until the short circuit is removed and the output rises back to the regulation level.

MPS Proprietary Information. Patent Protected. Unauthorized Photocopy and Duplication Prohibited.
© 2022 MPS. All Rights Reserved.

APPLICATION INFORMATION

Setting the Output Voltage

The external resistor divider sets the output voltage (V_{OUT}). Consider the tradeoff between stability and dynamics to choose a feedback resistor (R1) that is not too large or too small. There is no strict requirement for the feedback resistor. R2 can be calculated with Equation (2):

$$R2 = \frac{R1}{\frac{V_{OUT}}{0.6} - 1} \quad (2)$$

Figure 2 shows the feedback circuit.

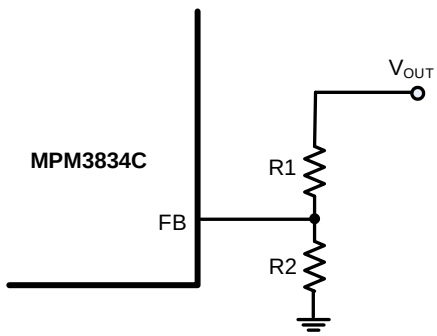

Figure 2: Feedback Network

Table 1 lists the recommended resistor values for common output voltages.

Table 1: Resistor Values for Common Output Voltages

V_{OUT} (V)	R1 (kΩ)	R2 (kΩ)
1.0	200 (1%)	300 (1%)
1.2	200 (1%)	200 (1%)
1.8	200 (1%)	100 (1%)
2.5	200 (1%)	63.2 (1%)
3.3	200 (1%)	44.2 (1%)

Selecting the Input Capacitor

The step-down converter has a discontinuous input current, and requires a capacitor to supply AC current while maintaining the DC input voltage. For optimal performance, use low-ESR capacitors. Ceramic capacitors with X5R or X7R dielectrics are highly recommended because of their low ESR and small temperature coefficients. For most applications, a 22µF capacitor is sufficient.

Since the input capacitor absorbs the input switching current, it requires an adequate ripple current rating. The RMS current in the input capacitor can be estimated with Equation (3):

$$I_{C1} = I_{LOAD} \times \sqrt{\frac{V_{OUT}}{V_{IN}} \times \left(1 - \frac{V_{OUT}}{V_{IN}}\right)} \quad (3)$$

The worst-case condition occurs at V_{IN} = 2 x V_{OUT}, calculated with Equation (4):

$$I_{C1} = \frac{I_{LOAD}}{2} \quad (4)$$

For simplification, choose an input capacitor with an RMS current rating greater than half of the maximum load current.

The input capacitor can be electrolytic, tantalum, or ceramic. When using electrolytic or tantalum capacitors, add a small, high-quality ceramic capacitor (i.e. 0.1µF) as close to the IC as possible. When using ceramic capacitors, ensure that they have enough capacitance to provide a sufficient charge to prevent an excessive voltage ripple at the input. The input voltage ripple caused by the capacitance can be calculated with Equation (5):

$$\Delta V_{IN} = \frac{I_{LOAD}}{f_{SW} \times C1} \times \frac{V_{OUT}}{V_{IN}} \times \left(1 - \frac{V_{OUT}}{V_{IN}}\right) \quad (5)$$

Selecting the Output Capacitor

An output capacitor (C2) is required to maintain the DC output voltage.

Low-ESR ceramic capacitors can be used to keep the output voltage ripple low. Generally, a 22µF output ceramic capacitor is sufficient for most applications. If V_{OUT} is higher, a 47µF capacitor may be required to stabilize the system.

When using ceramic capacitors, the capacitance dominates the impedance at the switching frequency and causes the majority of the output voltage ripple. For simplification, the output voltage ripple can be estimated with Equation (6):

$$\Delta V_{OUT} = \frac{V_{OUT}}{8 \times f_{SW}^{2} \times L_1 \times C2} \times \left(1 - \frac{V_{OUT}}{V_{IN}}\right) \quad (6)$$

MPS Proprietary Information. Patent Protected. Unauthorized Photocopy and Duplication Prohibited.
© 2022 MPS. All Rights Reserved.

When using tantalum or electrolytic capacitors, the ESR dominates the impedance at the switching frequency. For simplification, the output ripple can be calculated with Equation (7):

$$\Delta V_{OUT} = \frac{V_{OUT}}{f_{SW} \times L_1} \times \left(1 - \frac{V_{OUT}}{V_{IN}}\right) \times R_{ESR} \quad (7)$$

Where L1 is a 0.47μH integrated inductor.

The output capacitor's characteristics affect the stability of the regulation system.

MPS Proprietary Information. Patent Protected. Unauthorized Photocopy and Duplication Prohibited.
© 2022 MPS. All Rights Reserved.

PCB Layout Guidelines

An efficient layout for the switching power supplies is critical for stable operation, especially for the high switching frequency converter. A poorly optimized layout can result in poor line for the regulator or load regulation or stability issues. For the best results, refer to Figure 3 and follow the guidelines below:

1. Place a 0805-sized ceramic input capacitor as close to the IC pins as possible.
2. Place a 0402-sized capacitor place at the bottom of the IC (optional).
3. Connect the two ends of the ceramic capacitor directly to IN and PGND.
4. Place the external feedback resistor next to FB.
5. Connect AGND and PGND at a single point.

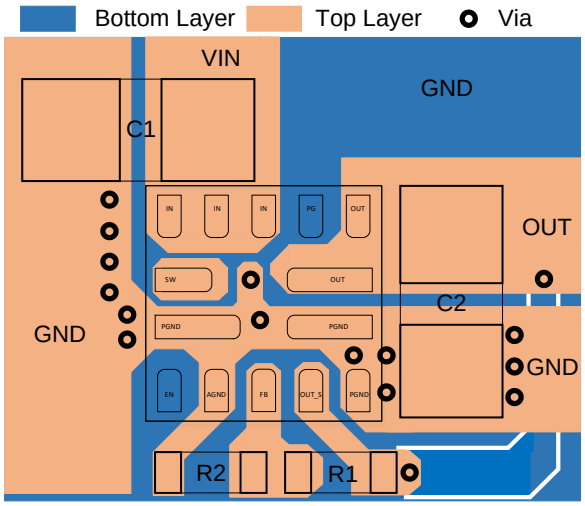

Figure 3: Recommended PCB Layout

MPS Proprietary Information. Patent Protected. Unauthorized Photocopy and Duplication Prohibited.
© 2022 MPS. All Rights Reserved.

TYPICAL APPLICATION CIRCUIT

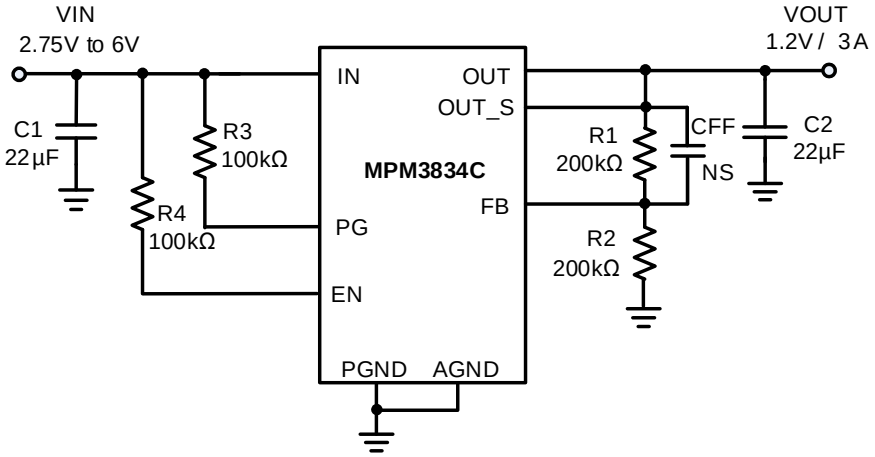

Figure 4: Typical Application Circuit

Note:

10) Additional input capacitors may be required for applications where V_{IN} < 3.3V.

MPS Proprietary Information. Patent Protected. Unauthorized Photocopy and Duplication Prohibited.
© 2022 MPS. All Rights Reserved.

PACKAGE INFORMATION

ECLGA-14 (2.5mmx2.5mm)

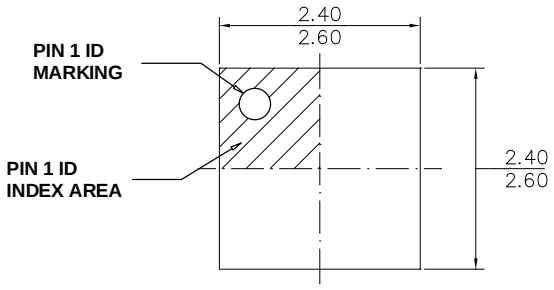

TOP VIEW

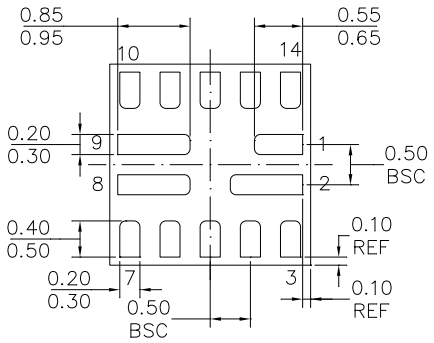

BOTTOM VIEW

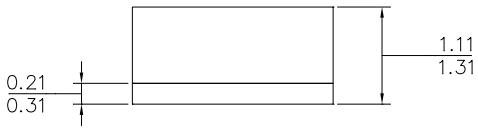

SIDE VIEW

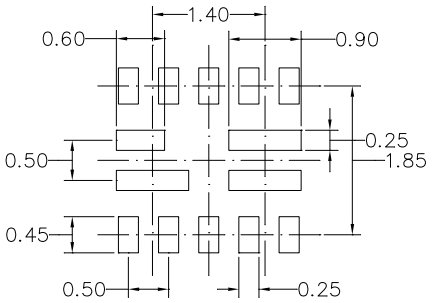

RECOMMENDED LAND PATTERN

NOTE:

1) ALL DIMENSIONS ARE IN MILLIMETERS.
2) LEAD COPLANARITY SHALL BE 0.10 MILLIMETERS MAX.
3) JEDEC REFERENCE IS MO-303.
4) DRAWING IS NOT TO SCALE.

MPS Proprietary Information. Patent Protected. Unauthorized Photocopy and Duplication Prohibited.
© 2022 MPS. All Rights Reserved.

CARRIER INFORMATION

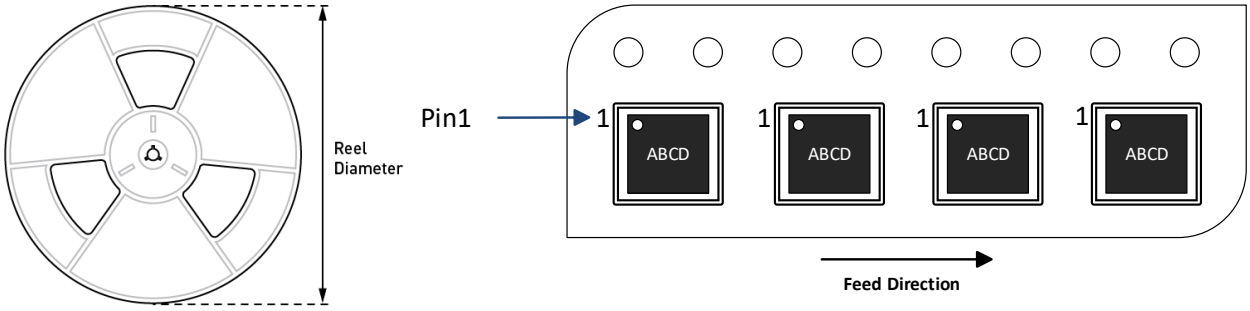

Part Number	Package Description	Quantity/ Reel	Quantity/ Tube	Quantity/ Tray	Reel Diameter	Carrier Tape Width	Carrier Tape Pitch
MPM3834CGPA-Z	ECLGA-14 (2.5mmx2.5mm)	2500	N/A	N/A	13in	12mm	8mm

MPS Proprietary Information. Patent Protected. Unauthorized Photocopy and Duplication Prohibited.
© 2022 MPS. All Rights Reserved.

REVISION HISTORY

Revision #	Revision Date	Description	Pages Updated
1.0	4/15/2022	Initial Release	-
1.01	6/14/2022	Corrected mentions of “MPM3414C” to “MPM3834C”	1, 13

Notice: The information in this document is subject to change without notice. Please contact MPS for current specifications. Users should warrant and guarantee that third-party Intellectual Property rights are not infringed upon when integrating MPS products into any application. MPS will not assume any legal responsibility for any said applications.

MPS Proprietary Information. Patent Protected. Unauthorized Photocopy and Duplication Prohibited.
© 2022 MPS. All Rights Reserved.