1SNK706031R0000 ✔ ACTIVE

ENTRELEC | ENTRELEC SNK

TE Internal #: 1SNK706031R0000

Modular Terminal Blocks, Feed-Through, PI-Spring Terminal Block, Orange, Product Spacing .236 in [6 mm], 3 Position, DIN Rail, ENTRELEC SNK

View on TE.com >

Connectors > Terminal Blocks & Strips > Modular Terminal Blocks


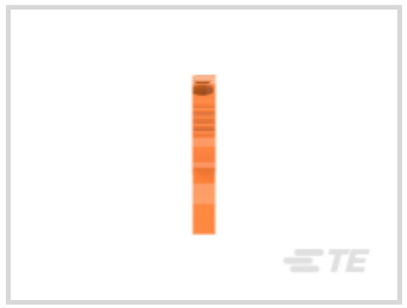

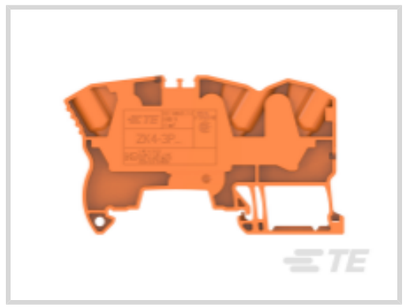
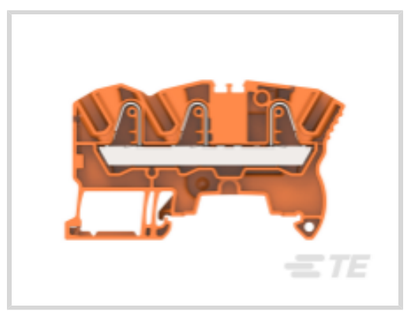

Block Function: **Feed-Through**

Modular Terminal Block Product Type: **PI-Spring Terminal Block**

Primary Product Color: **Orange**

Product Spacing: **6 mm [.236 in]**

Number of Positions: **3**

Features

Product Type Features

Modular Terminal Block Product Type	PI-Spring Terminal Block

Configuration Features

Gauge Type	2.9 mm Dia.
Number of Levels	1
Number of Circuits	1
Block Function	Feed-Through
Number of Positions	3

Electrical Characteristics

Operating Voltage Rating (UL & CSA) (Max) - Main Circuit	600 V
Impulse Withstanding Voltage Rating (IEC)	8000 V
Voltage Rating (CSA)	600 V
Current Rating (CSA)	30 A
Power Loss	1 W
Dielectric Withstanding Voltage (Max)	2200 V

Short-Time Withstanding Current Rating @ 1s	480 A
Voltage Rating (IEC)	1000 V
Current Rating (UL)	30 A
Current Rating (IEC)	32 A

Body Features

Product Weight	11 g
Primary Product Color	Orange

Mechanical Attachment

DIN Rail Mounting Type	TH35-15, TH35-7.5
Connector Mounting Type	DIN Rail

Housing Features

Housing Material	Polyamide

Dimensions

Main Circuit Capacity - 1 Rigid Stranded Conductor per Spring Clamp	.5 - 6 mm²
Main Circuit Capacity - Twin Ferrule per Spring Clamp	.5 - 1 mm²
Wire Stripping Length	12.5 mm
Main Circuit Capacity - 1 Non-Insulated Ferrule per Spring Clamp	.5 - 4 mm²
Main Circuit Capacity - 1 Insulated Ferrule per Spring Clamp	26 - 12 AWG
Main Circuit Capacity - 1 Flexible Conductor per Spring Clamp	.5 - 4 mm²
Tool Size	3.5 mm[.138 in]
Product Depth	41.1 mm
Product Length	41.1 mm
Product Height	72.5 mm
Product Spacing	6 mm[.236 in]

Usage Conditions

Installation Temperature Range	-5 - 40 °C[23 - 104 °F]
Operating Temperature Range	-55 - 110 °C[-67 - 230 °F]

Industry Standards

IP Rating	IP20
UL Flammability Rating	UL 94V-0

Product Compliance

For compliance documentation, visit the product page on TE.com>

EU RoHS Directive 2011/65/EU	Compliant
EU ELV Directive 2000/53/EC	Compliant
China RoHS 2 Directive MIIT Order No 32, 2016	No Restricted Materials Above Threshold
EU REACH Regulation (EC) No. 1907/2006	Current ECHA Candidate List: JAN 2024 (240) Candidate List Declared Against: JAN 2024 (240) Does not contain REACH SVHC
Halogen Content	Low Halogen - Br, Cl, F, I < 900 ppm per homogenous material. Also BFR/CFR/PVC Free
Solder Process Capability	Not reviewed for solder process capability

Product Compliance Disclaimer

This information is provided based on reasonable inquiry of our suppliers and represents our current actual knowledge based on the information they provided. This information is subject to change. The part numbers that TE has identified as EU RoHS compliant have a maximum concentration of 0.1% by weight in homogenous materials for lead, hexavalent chromium, mercury, PBB, PBDE, DBP, BBP, DEHP, DIBP, and 0.01% for cadmium, or qualify for an exemption to these limits as defined in the Annexes of Directive 2011/65/EU (RoHS2). Finished electrical and electronic equipment products will be CE marked as required by Directive 2011/65/EU. Components may not be CE marked. Additionally, the part numbers that TE has identified as EU ELV compliant have a maximum concentration of 0.1% by weight in homogenous materials for lead, hexavalent chromium, and mercury, and 0.01% for cadmium, or qualify for an exemption to these limits as defined in the Annexes of Directive 2000/53/EC (ELV). Regarding the REACH Regulation, the information TE provides on SVHC in articles for this part number is based on the latest European Chemicals Agency (ECHA) 'Guidance on requirements for substances in articles' posted at this URL: https://echa.europa.eu/guidance-documents/guidance-on-reach

Compatible Parts

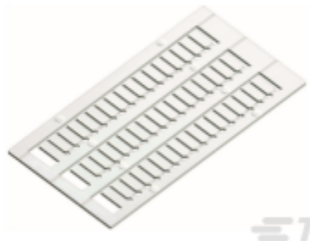

TE Part # 1SNK140000R0000
MC512

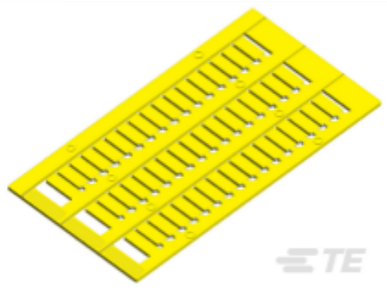

TE Part # 1SNK140004R0000
MC512-YL

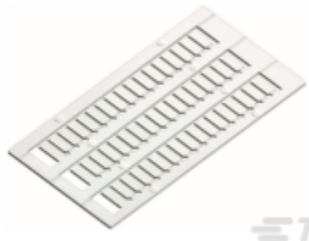

TE Part # 1SNK150000R0000
MC612

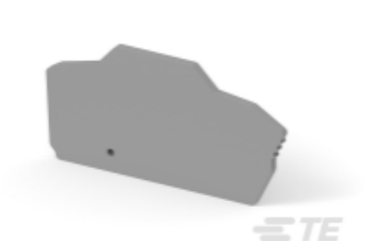

TE Part # 1SNK705911R0000
EK2.5-3P



TE Part # 1SNK900001R0000
BAM4



TE Part # 1SNK900002R0000
BAZ1



TE Part # 1SNK900102R0000
BAZH1



TE Part # 1SNK900105R0000
ES-TC6



TE Part # 1SNK900107R0000
CS-R3



TE Part # 1SNK906302R0000
JB6-2



TE Part # 1SNK906303R0000
JB6-3



TE Part # 1SNA164800R0300
PR3.G2

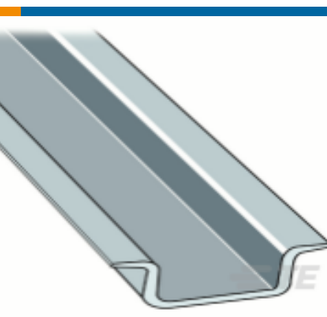

TE Part # 1SNA168500R1200
PR4

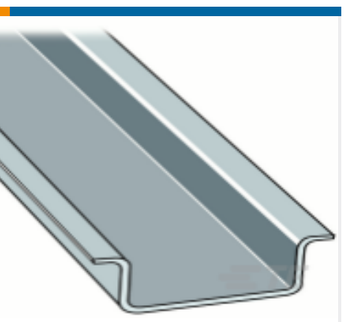

TE Part # 1SNA168700R2200
PR5

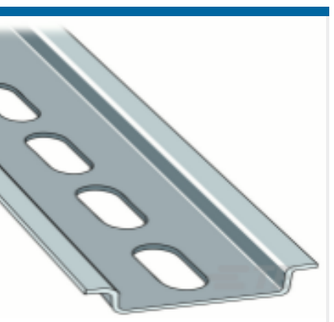

TE Part # 1SNA173220R0500
PR30

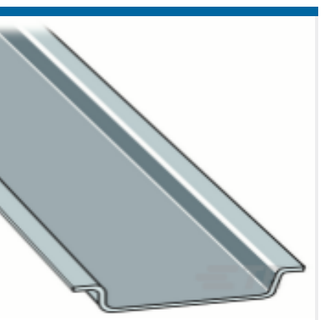

TE Part # 1SNA174300R1700
PR3.Z2

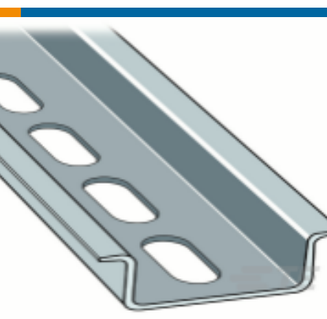

TE Part # 1SNA178529R0400
PR50



TE Part # 1SNK149999R0000
MC512PA

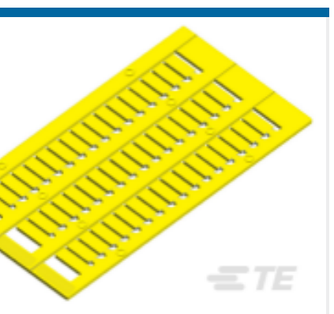

TE Part # 1SNK150004R0000
MC612-YL



TE Part # 1SNK159999R0000
MC612PA

Also in the Series | ENTRELEC SNK

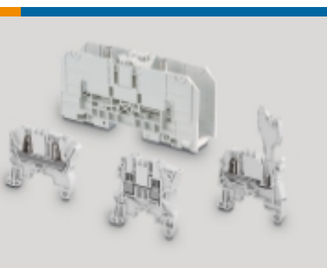

Modular Terminal Blocks(320)



Terminal Block & Strip Conducting Accessories(67)



Terminal Block & Strip Insulating Accessories(31)

Customers Also Bought



TE Part # 1011-344-0205
DUST CAP, 2P, PLG, BLK, DT



TE Part # 0413-204-2005
SEALING PLUG, SIZE 20, RED

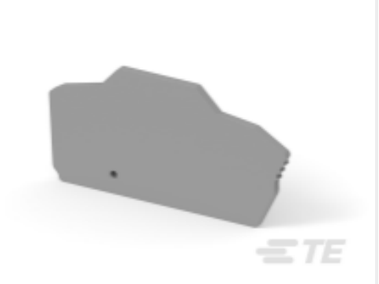

TE Part # 1SNK705911R0000
EK2.5-3P



TE Part # 2373921-3
CVTY PLUG,PIN DIA 2.5,CVTY DIA,2.5, BLU



TE Part # 2373921-4
CVTY PLUG,PIN DIA 1.6,CVTY DIA,2.0, GRN

Documents

CAD Files

3D PDF

3D

Customer View Model
ENG_CVM_CVM_1SNK706031R0000_A.2d_dxf.zip

English

Customer View Model
ENG_CVM_CVM_1SNK706031R0000_A.3d_igs.zip

English

Customer View Model
ENG_CVM_CVM_1SNK706031R0000_A.3d_stp.zip

English

By downloading the CAD file I accept and agree to the Terms and Conditionsof use.

Datasheets & Catalog Pages

ENTRELEC Terminal Block - Master Catalog

ENTRELEC Terminal Block - Master Catalog

English

ZK4-3P-OR

English

SNK SERIES TERMINAL BLOCKS

English

ENTRELEC Terminal Blocks Catalogue (RUS)

Agency Approvals

Bureau Veritas Marine and Offshore Certificate

English