UPBV 4/ 1-M BU - Plug

3045758

https://www.phoenixcontact.com/us/products/3045758

Please be informed that the data shown in this PDF document is generated from our online catalog. Please find the complete data in the user documentation. Our general terms of use for downloads are valid.



Plug, nom. voltage: 800 V, nominal current: 32 A, number of positions: 1, connection method: Screw connection, Rated cross section: 4 mm^2, cross section: 0.14 mm^2 - 6 mm^2, color: blue

Product description

Connector element center, left housing with engagement pin, right opened without cover

Your advantages

- Can be bridged with FBS ... standard bridges
- The COMBI plugs for self-assembly provide solutions that users can implement themselves
- The screw plugs can be combined with COMBI terminal blocks with all forms of connection technology and are available in two versions
- The plugs are assembled directly on site by snapping together 1-position plug elements
- The connected conductors can be led directly into the cable duct to save space

Commercial data

Item number	3045758
Packing unit	50 pc
Minimum order quantity	50 pc
Sales key	BE01
Product key	BE1144
Catalog page	Page 335 (C-1-2019)
GTIN	4046356083270
Weight per piece (including packing)	6.468 g
Weight per piece (excluding packing)	6.468 g
Customs tariff number	85366990
Country of origin	TR

Technical data

Product properties

Product type	Terminal plug
Number of positions	1
Pitch	6.2 mm
Potentials	1

Data management status

Article revision	06

Insulation characteristics

Overvoltage category	III
Degree of pollution	3

Electrical properties

Rated surge voltage	8 kV

Connection data

Nominal cross section	4 mm²
Screw thread	M3
Tightening torque	0.6 ... 0.8 Nm
Stripping length	9 mm
Internal cylindrical gage	A4
Connection in acc. with standard	IEC 61984
Conductor cross section rigid	0.14 mm² ... 6 mm²
Cross section AWG	26 ... 10 (converted acc. to IEC)
Conductor cross section flexible	0.14 mm² ... 6 mm²
Conductor cross section, flexible [AWG]	26 ... 10 (converted acc. to IEC)
Conductor cross-section flexible (ferrule without plastic sleeve)	0.14 mm² ... 4 mm²
Flexible conductor cross section (ferrule with plastic sleeve)	0.14 mm² ... 4 mm²
2 conductors with same cross section, solid	0.14 mm² ... 1.5 mm²
2 conductors with same cross section, flexible	0.14 mm² ... 1.5 mm²
2 conductors with same cross section, flexible, with ferrule without plastic sleeve	0.14 mm² ... 1.5 mm²
2 conductors with the same cross section, flexible, with TWIN ferrule with plastic sleeve	0.5 mm² ... 1 mm²
Nominal current	32 A
Maximum load current	32 A (with 6 mm² conductor cross section)
Nominal voltage	800 V
Nominal cross section	4 mm²

Dimensions

Width	6.2 mm
Height	22 mm

Depth	48.5 mm
Length	22 mm
Pitch	6.2 mm

Material specifications

Color	blue
Flammability rating according to UL 94	V0
Insulating material group	I
Insulating material	PA
Static insulating material application in cold	-60 °C
Temperature index of insulation material (DIN EN 60216-1 (VDE 0304-21))	130 °C
Relative insulation material temperature index (Elec., UL 746 B)	130 °C
Fire protection for rail vehicles (DIN EN 45545-2) R22	HL 1 - HL 3
Fire protection for rail vehicles (DIN EN 45545-2) R23	HL 1 - HL 3
Fire protection for rail vehicles (DIN EN 45545-2) R24	HL 1 - HL 3
Fire protection for rail vehicles (DIN EN 45545-2) R26	HL 1 - HL 3
Calorimetric heat release NFPA 130 (ASTM E 1354)	28 MJ/kg
Surface flammability NFPA 130 (ASTM E 162)	passed
Specific optical density of smoke NFPA 130 (ASTM E 662)	passed
Smoke gas toxicity NFPA 130 (SMP 800C)	passed

Environmental and real-life conditions

Ambient conditions

Ambient temperature (operation)	-60 °C (max. operating temperature see derating curve)
Ambient temperature (storage/transport)	-25 °C ... 60 °C (for a short time, no longer than 24 h, -60°C to +70°C)
Ambient temperature (assembly)	-5 °C ... 70 °C
Ambient temperature (actuation)	-5 °C ... 70 °C
Permissible humidity (operation)	20 % ... 90 %
Permissible humidity (storage/transport)	30 % ... 70 %

Standards and regulations

Connection in acc. with standard	IEC 61984

Drawings

Diagram

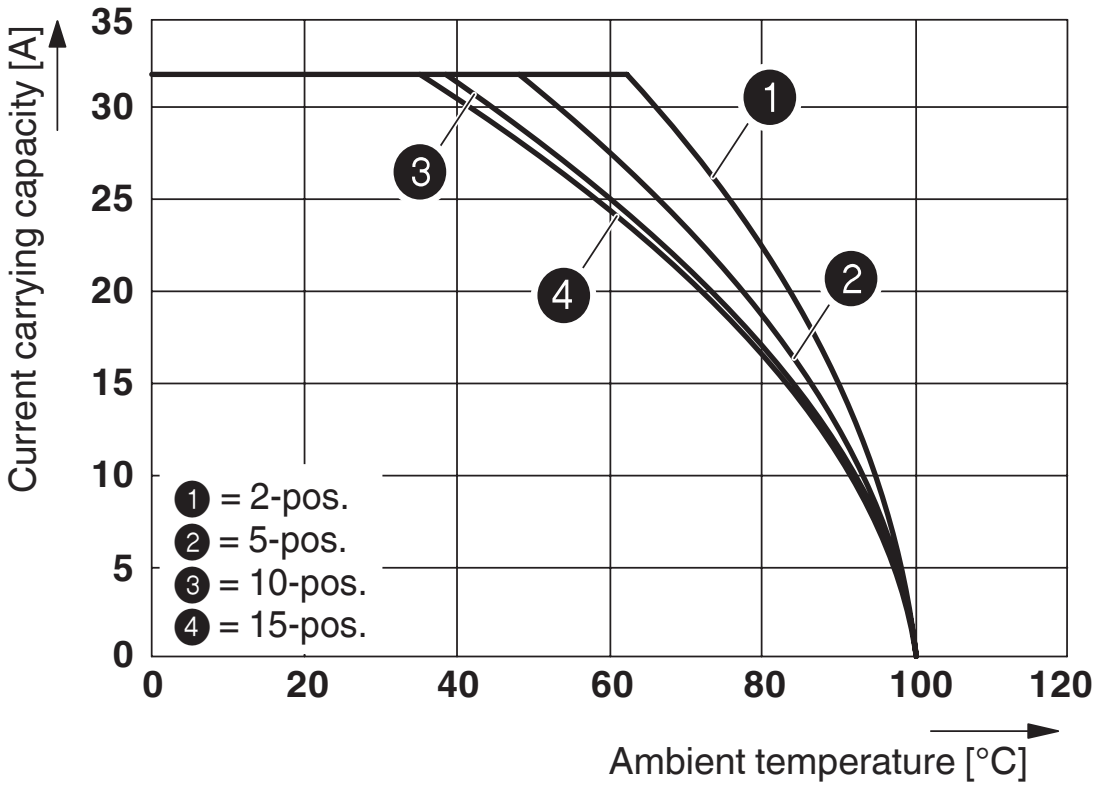

The figure shows the derating curve of the UT 4/1P... terminal block in connection with the UPVB 4 plug

Circuit diagram



Schematic diagram

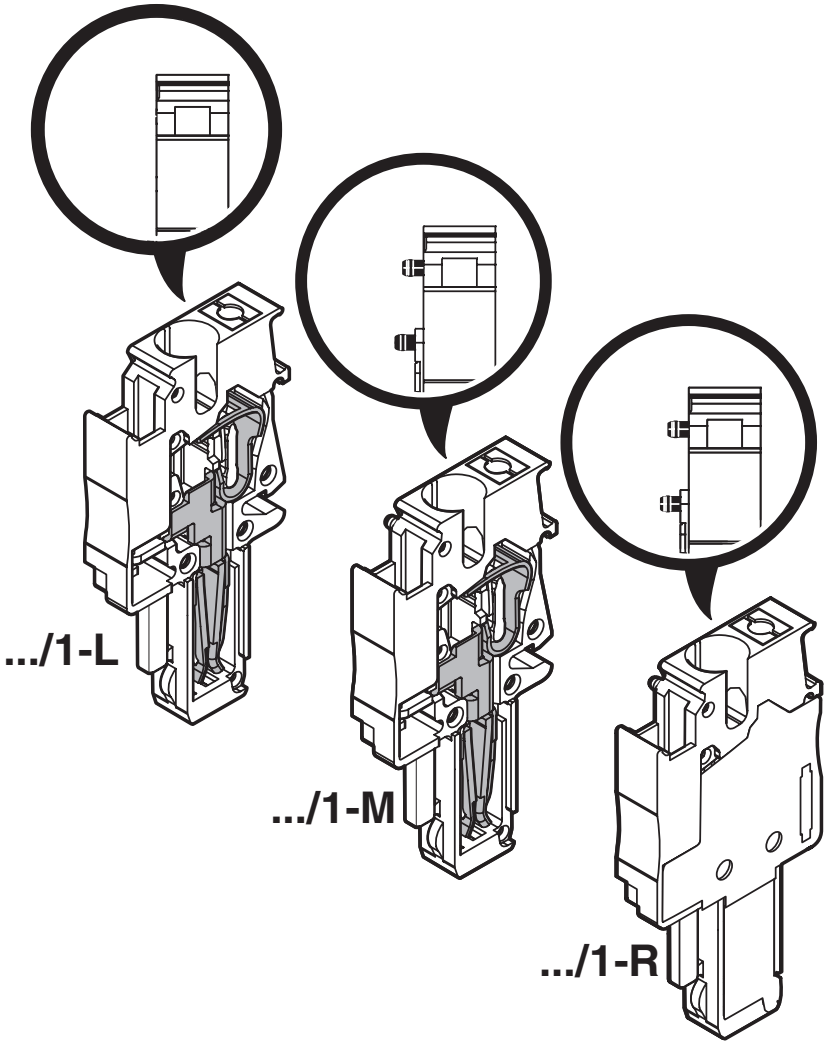

Approvals

To download certificates, visit the product detail page: https://www.phoenixcontact.com/us/products/3045758

CSA
Approval ID: 13631

	Nominal voltage U_N	Nominal current I_N	Cross section AWG	Cross section mm^2
Use group B				
	600 V	30 A	26 - 10	-
Use group C				
	600 V	30 A	26 - 10	-

EAC
Approval ID: RU C-DE.BL08.B.00511

cULus Recognized
Approval ID: E60425

	Nominal voltage U_N	Nominal current I_N	Cross section AWG	Cross section mm^2
Use group B				
	600 V	30 A	26 - 10	-
Multi-conductor connection	600 V	30 A	26 - 14	-
Use group C				
	600 V	30 A	26 - 10	-
Multi-conductor connection	600 V	30 A	26 - 14	-

Classifications

ECLASS

ECLASS-11.0	27141151
ECLASS-12.0	27141151
ECLASS-13.0	27250306

ETIM

ETIM 9.0	EC002021

UNSPSC

UNSPSC 21.0	39121400

Environmental product compliance

EU RoHS

Fulfills EU RoHS substance requirements	Yes
Exemption	6(c)

China RoHS

Environment friendly use period (EFUP)	EFUP-50
	An article-related China RoHS declaration table can be found in the download area for the respective article under "Manufacturer declaration". For all articles with EFUP-E, no China RoHS declaration table issued and required.

EU REACH SVHC

REACH candidate substance (CAS No.)	Lead(CAS: 7439-92-1)
SCIP	e2c35bad-a50d-4e0b-b769-3ab4b19de034

Accessories

Note: Applying some accessories below might limit this product.

FBS 2-6 - Plug-in bridge

3030336

https://www.phoenixcontact.com/us/products/3030336



Plug-in bridge, pitch: 6.2 mm, number of positions: 2, color: red

Max. current carrying capacity: 32 A

FBS 3-6 - Plug-in bridge

3030242

https://www.phoenixcontact.com/us/products/3030242



Plug-in bridge, pitch: 6.2 mm, number of positions: 3, color: red

Max. current carrying capacity: 32 A

FBS 4-6 - Plug-in bridge

3030255

https://www.phoenixcontact.com/us/products/3030255



Plug-in bridge, pitch: 6.2 mm, number of positions: 4, color: red

Max. current carrying capacity: 32 A

FBS 5-6 - Plug-in bridge

3030349

https://www.phoenixcontact.com/us/products/3030349



Plug-in bridge, pitch: 6.2 mm, number of positions: 5, color: red

Max. current carrying capacity: 32 A

FBS 6-6 - Plug-in bridge

1008238

https://www.phoenixcontact.com/us/products/1008238



Plug-in bridge, One side not fully isolated, pitch: 6.2 mm, number of positions: 6, color: red

Max. current carrying capacity: 32 A

FBS 10-6 - Plug-in bridge

3030271

https://www.phoenixcontact.com/us/products/3030271



Plug-in bridge, pitch: 6.2 mm, number of positions: 10, color: red

Max. current carrying capacity: 32 A

FBSR 2-6 - Plug-in bridge

3033715

https://www.phoenixcontact.com/us/products/3033715



Plug-in bridge, pitch: 6.2 mm, number of positions: 2, color: red

Max. current carrying capacity: 24 A

FBSR 3-6 - Plug-in bridge

3001594

https://www.phoenixcontact.com/us/products/3001594



Plug-in bridge, pitch: 6.2 mm, number of positions: 3, color: red

Max. current carrying capacity: 24 A

FBSR 4-6 - Plug-in bridge

3001595

https://www.phoenixcontact.com/us/products/3001595



Plug-in bridge, pitch: 6.2 mm, number of positions: 4, color: red

Max. current carrying capacity: 24 A

FBSR 5-6 - Plug-in bridge

3001596

https://www.phoenixcontact.com/us/products/3001596



Plug-in bridge, pitch: 6.2 mm, number of positions: 5, color: red

Max. current carrying capacity: 24 A

FBSR 10-6 - Plug-in bridge

3033716

https://www.phoenixcontact.com/us/products/3033716



Plug-in bridge, pitch: 6.2 mm, number of positions: 10, color: red

Max. current carrying capacity: 24 A

FBSRH 2-6 - Short-circuit connector

3033812

https://www.phoenixcontact.com/us/products/3033812



Short-circuit connector, pitch: 6.2 mm, number of positions: 2, color: red

Max. current carrying capacity: 24 A

UPBV 4/ 1-M BU - Plug

3045758

https://www.phoenixcontact.com/us/products/3045758

FBS 2-6 BU - Plug-in bridge

3036932

https://www.phoenixcontact.com/us/products/3036932



Plug-in bridge, pitch: 6.2 mm, number of positions: 2, color: blue

Max. current carrying capacity: 32 A

FBS 3-6 BU - Plug-in bridge

3036945

https://www.phoenixcontact.com/us/products/3036945



Plug-in bridge, pitch: 6.2 mm, number of positions: 3, color: blue

Max. current carrying capacity: 32 A

FBS 4-6 BU - Plug-in bridge

3036958

https://www.phoenixcontact.com/us/products/3036958



Plug-in bridge, pitch: 6.2 mm, number of positions: 4, color: blue

Max. current carrying capacity: 32 A

FBS 5-6 BU - Plug-in bridge

3036961

https://www.phoenixcontact.com/us/products/3036961



Plug-in bridge, pitch: 6.2 mm, number of positions: 5, color: blue

Max. current carrying capacity: 32 A

FBS 10-6 BU - Plug-in bridge

3032198

https://www.phoenixcontact.com/us/products/3032198



Plug-in bridge, pitch: 6.2 mm, number of positions: 10, color: blue

Max. current carrying capacity: 32 A

FBS 20-6 BU - Plug-in bridge

3032208

https://www.phoenixcontact.com/us/products/3032208

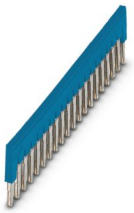

Plug-in bridge, pitch: 6.2 mm, number of positions: 20, color: blue

Max. current carrying capacity: 32 A

FBS 50-6 BU - Plug-in bridge

3032211

https://www.phoenixcontact.com/us/products/3032211



Plug-in bridge, pitch: 6.2 mm, number of positions: 50, color: blue

Max. current carrying capacity: 32 A

UPRZ - Latching

3045570

https://www.phoenixcontact.com/us/products/3045570



Latching, width: 10 mm, height: 39.8 mm, number of positions: 2, color: orange

UPR/ 2 - Latching

3045567

https://www.phoenixcontact.com/us/products/3045567



Latching, width: 10 mm, height: 39.8 mm, number of positions: 2, color: orange

UPZ/ 2 - Strain relief

3045554

https://www.phoenixcontact.com/us/products/3045554



Strain relief, width: 9.3 mm, height: 36.7 mm, number of positions: 2, color: black

PRT/2 - Latching

3040631

https://www.phoenixcontact.com/us/products/3040631



Latching, can only be released using a screwdriver, width: 9 mm, height: 23.2 mm, number of positions: 2, color: orange

UPBV 4/ 1-L - Plug

3045716

https://www.phoenixcontact.com/us/products/3045716



Plug, nom. voltage: 800 V, nominal current: 32 A, number of positions: 1, connection method: Screw connection, Rated cross section: 4 mm^2, cross section: 0.14 mm^2- 6 mm^2, color: gray

UPBV 4/ 1-M BU - Plug

3045758

https://www.phoenixcontact.com/us/products/3045758

UPBV 4/ 1-L BU - Plug

3045729

https://www.phoenixcontact.com/us/products/3045729



Plug, nom. voltage: 800 V, nominal current: 32 A, number of positions: 1, connection method: Screw connection, Rated cross section: 4 mm^2, cross section: 0.14 mm^2- 6 mm^2, color: blue

UPBV 4/ 1-L GNYE - Plug

3045732

https://www.phoenixcontact.com/us/products/3045732



Plug, nom. voltage: 800 V, nominal current: 32 A, number of positions: 1, connection method: Screw connection, Rated cross section: 4 mm^2, cross section: 0.14 mm^2- 6 mm^2, color: green-yellow

UPBV 4/ 1-M BU - Plug

3045758

https://www.phoenixcontact.com/us/products/3045758

UPBV 4/ 1-M - Plug

3045745

https://www.phoenixcontact.com/us/products/3045745



Plug, nom. voltage: 800 V, nominal current: 32 A, number of positions: 1, connection method: Screw connection, Rated cross section: 4 mm^2, cross section: 0.14 mm^2- 6 mm^2, color: gray

UPBV 4/ 1-M BU - Plug

3045758

https://www.phoenixcontact.com/us/products/3045758



Plug, nom. voltage: 800 V, nominal current: 32 A, number of positions: 1, connection method: Screw connection, Rated cross section: 4 mm^2, cross section: 0.14 mm^2- 6 mm^2, color: blue

UPBV 4/ 1-M BU - Plug

3045758

https://www.phoenixcontact.com/us/products/3045758

UPBV 4/ 1-M GNYE - Plug

3045761

https://www.phoenixcontact.com/us/products/3045761



Plug, nom. voltage: 800 V, nominal current: 32 A, number of positions: 1, connection method: Screw connection, Rated cross section: 4 mm^2, cross section: 0.14 mm^2- 6 mm^2, color: green-yellow

UPBV 4/ 1-R - Plug

3045774

https://www.phoenixcontact.com/us/products/3045774



Plug, nom. voltage: 800 V, nominal current: 32 A, number of positions: 1, connection method: Screw connection, Rated cross section: 4 mm^2, cross section: 0.14 mm^2- 6 mm^2, color: gray

UPBV 4/ 1-M BU - Plug

3045758

https://www.phoenixcontact.com/us/products/3045758

UPBV 4/ 1-R BU - Plug

3045787

https://www.phoenixcontact.com/us/products/3045787



Plug, nom. voltage: 800 V, nominal current: 32 A, number of positions: 1, connection method: Screw connection, Rated cross section: 4 mm^2, cross section: 0.14 mm^2- 6 mm^2, color: blue

UPBV 4/ 1-R GNYE - Plug

3045790

https://www.phoenixcontact.com/us/products/3045790



Plug, nom. voltage: 800 V, nominal current: 32 A, number of positions: 1, connection method: Screw connection, Rated cross section: 4 mm^2, cross section: 0.14 mm^2- 6 mm^2, color: green-yellow

LPS-6/E - Service connector

3270540

https://www.phoenixcontact.com/us/products/3270540



Service connector, nom. voltage: 800 V, nominal current: 24 A, number of positions: 1, connection method: Push-in connection, Rated cross section: 2.5 mm^2, cross section: 0.14 mm^2 - 4 mm^2, color: red

LPS-6 - Service connector

3270541

https://www.phoenixcontact.com/us/products/3270541



Service connector, nom. voltage: 800 V, nominal current: 24 A, number of positions: 1, connection method: Push-in connection, Rated cross section: 2.5 mm^2, cross section: 0.14 mm^2 - 4 mm^2, color: red

LPO 4/E - Pick-off plug

3270519

https://www.phoenixcontact.com/us/products/3270519



Pick-off plug, nom. voltage: 800 V, nominal current: 24 A, number of positions: 1, connection method: Push-in connection, Rated cross section: 2.5 mm^2, cross section: 0.14 mm^2- 4 mm^2, color: gray

LPO 4 - Pick-off plug

3270522

https://www.phoenixcontact.com/us/products/3270522



Pick-off plug, nom. voltage: 800 V, nominal current: 24 A, number of positions: 1, connection method: Push-in connection, Rated cross section: 2.5 mm^2, cross section: 0.14 mm^2- 4 mm^2, color: gray

MPS-MT - Test plug

0201744

https://www.phoenixcontact.com/us/products/0201744



Test plug, with solder connection up to 1 mm^2 conductor cross section, number of positions: 1, color: gray

MPS-IH WH - Insulating sleeve

0201663

https://www.phoenixcontact.com/us/products/0201663

Insulating sleeve, color: white



MPS-IH RD - Insulating sleeve

0201676

https://www.phoenixcontact.com/us/products/0201676

Insulating sleeve, color: red



MPS-IH BU - Insulating sleeve

0201689

https://www.phoenixcontact.com/us/products/0201689

Insulating sleeve, color: blue

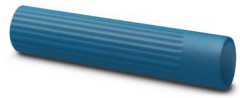

MPS-IH YE - Insulating sleeve

0201692

https://www.phoenixcontact.com/us/products/0201692

Insulating sleeve, color: yellow



MPS-IH GN - Insulating sleeve

0201702

https://www.phoenixcontact.com/us/products/0201702

Insulating sleeve, color: green



MPS-IH GY - Insulating sleeve

0201728

https://www.phoenixcontact.com/us/products/0201728

Insulating sleeve, color: gray



MPS-IH BK - Insulating sleeve

0201731

https://www.phoenixcontact.com/us/products/0201731

Insulating sleeve, color: black



UPBV 4/ 1-M BU - Plug

3045758

https://www.phoenixcontact.com/us/products/3045758

PAI-4-N GY - Test adapter

3032871

https://www.phoenixcontact.com/us/products/3032871



4 mm test adapter, for terminal blocks with 5.2 mm, 6.2 mm and 8.2 mm pitch

PS-6 - Test plug

3030996

https://www.phoenixcontact.com/us/products/3030996



Test plug, Modular test plug, number of positions: 1, color: red

PS-6/2,3MM RD - Test plug

3038736

https://www.phoenixcontact.com/us/products/3038736



Test plug, number of positions: 1, color: red

ZBF 5:UNBEDRUCKT - Zack Marker strip, flat

0808642

https://www.phoenixcontact.com/us/products/0808642



Zack Marker strip, flat, Strip, white, unlabeled, can be labeled with: PLOTMARK, CMS-P1-PLOTTER, mounting type: snapped, for terminal block width: 5 mm, lettering field size: 5.1 x 5.2 mm, Number of individual labels: 10

ZBF 5 CUS - Zack Marker strip, flat

0825025

https://www.phoenixcontact.com/us/products/0825025



Zack Marker strip, flat, can be ordered: Strip, white, labeled according to customer specifications, mounting type: snap into flat marker groove, for terminal block width: 5 mm, lettering field size: 5.15 x 5.15 mm, Number of individual labels: 10

ZBF 5,LGS:FORTL.ZAHLEN - Zack Marker strip, flat

0808671

https://www.phoenixcontact.com/us/products/0808671



Zack Marker strip, flat, Strip, white, labeled, printed horizontally: consecutive numbers 1 ... 10, 11 ... 20, etc. up to 491 ... 500, mounting type: snapped, for terminal block width: 5 mm, lettering field size: 5.15 x 5.15 mm, Number of individual labels: 10

ZBF 5,QR:FORTL.ZAHLEN - Zack Marker strip, flat

0808697

https://www.phoenixcontact.com/us/products/0808697



Zack Marker strip, flat, Strip, white, labeled, Printed vertically: consecutive numbers 1 ... 10, 11 ... 20, etc. up to 91 ... 100, mounting type: snapped, for terminal block width: 5 mm, lettering field size: 5.15 x 5.15 mm, Number of individual labels: 10

ZBF 5,LGS:GERADE ZAHLEN - Zack Marker strip, flat

0810821

https://www.phoenixcontact.com/us/products/0810821



Zack Marker strip, flat, Strip, white, labeled, printed horizontally: consecutive even numbers 2 ... 20, 22 ... 40, etc. up to 82 ... 100, mounting type: snapped, for terminal block width: 5 mm, lettering field size: 5.15 x 5.15 mm, Number of individual labels: 10

ZBF 5,LGS:UNGERADE ZAHLEN - Zack Marker strip, flat

0810863

https://www.phoenixcontact.com/us/products/0810863



Zack Marker strip, flat, Strip, white, labeled, printed horizontally: Odd numbers 1 - 19, 21 - 39, etc. up to 81 - 99, mounting type: snapped, for terminal block width: 5 mm, lettering field size: 5.15 x 5.15 mm, Number of individual labels: 10

UC-TMF 5 - Marker for terminal blocks

0818153

https://www.phoenixcontact.com/us/products/0818153



Marker for terminal blocks, Sheet, white, unlabeled, can be labeled with: BLUEMARK ID COLOR, BLUEMARK ID, BLUEMARK CLED, PLOTMARK, CMS-P1-PLOTTER, mounting type: snapped, for terminal block width: 5.2 mm, lettering field size: 4.6 x 5.1 mm, Number of individual labels: 96

UC-TMF 5 CUS - Marker for terminal blocks

0824638

https://www.phoenixcontact.com/us/products/0824638



Marker for terminal blocks, can be ordered: by sheet, white, labeled according to customer specifications, mounting type: snap into flat marker groove, for terminal block width: 5.2 mm, lettering field size: 4.6 x 5.1 mm, Number of individual labels: 96

UCT-TMF 5 - Marker for terminal blocks

0828744

https://www.phoenixcontact.com/us/products/0828744



Marker for terminal blocks, Sheet, white, unlabeled, can be labeled with: TOPMARK NEO, TOPMARK LASER, BLUEMARK ID COLOR, BLUEMARK ID, BLUEMARK CLED, THERMOMARK PRIME, THERMOMARK CARD 2.0, THERMOMARK CARD, mounting type: snapped, for terminal block width: 5.2 mm, lettering field size: 4.4 x 4.7 mm, Number of individual labels: 72

UCT-TMF 5 CUS - Marker for terminal blocks

0829658

https://www.phoenixcontact.com/us/products/0829658



Marker for terminal blocks, can be ordered: by sheet, white, labeled according to customer specifications, mounting type: snap into flat marker groove, for terminal block width: 5.2 mm, lettering field size: 4.4 x 4.7 mm, Number of individual labels: 72

SZS 0,6X3,5 - Screwdriver

1205053

https://www.phoenixcontact.com/us/products/1205053



Actuation tool, for ST terminal blocks, insulated, also suitable for use as a bladed screwdriver, size: 0.6 x 3.5 x 100 mm, 2-component grip, with non-slip grip

UPBV 4/ 1-M BU - Plug

3045758

https://www.phoenixcontact.com/us/products/3045758

SF-SL 0,6X3,5-100 S-VDE - Screwdriver

1212587

https://www.phoenixcontact.com/us/products/1212587



Actuation tool, for ST terminal blocks, VDE insulated, with slimmer insulation integrated in the blade, also suitable for use as a bladed screwdriver, size: 0.6 x 3.5 x 100 mm, 2-component grip, with non-slip grip

Phoenix Contact 2024 © - all rights reserved
https://www.phoenixcontact.com

Phoenix Contact USA
586 Fulling Mill Road
Middletown, PA 17057, United States
(+717) 944-1300
info@phoenixcon.com