HC-EVO-B10-BWS-PLRBK - Housing

1407632

https://www.phoenixcontact.com/us/products/1407632

Please be informed that the data shown in this PDF document is generated from our online catalog. Please find the complete data in the user documentation. Our general terms of use for downloads are valid.



HEAVYCON EVO panel mounting base, plastic, B10, with single locking latch, height: 30.5 mm, with flat gasket

Your advantages

- Lower costs than metal version
- Low weight
- Lower risk of condensation

Commercial data

Item number	1407632
Packing unit	1 pc
Minimum order quantity	1 pc
Sales key	BF57
Product key	BF7APL
Catalog page	Page 604 (C-2-2019)
GTIN	4046356776943
Weight per piece (including packing)	81.5 g
Weight per piece (excluding packing)	75.6 g
Customs tariff number	85389099
Country of origin	PL

Technical data

Notes

General	For contact inserts HC-B10, BB18, DD42, M, K8/24, HV03-I-PT, HC- 3-E...C

Product properties

Product type	Housing with locking latch
Housing type	Panel mounting base
Product family	HC-EVO-B
Application	Standard
Type	B10
Pg screw connection	none

Dimensions

Dimensional drawing	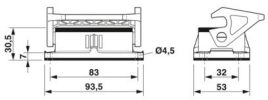
Width	53 mm
Height	30.5 mm
Length	93.5 mm
Drill hole distance, horizontal	83 mm
Drill hole distance, vertical	32 mm
Hole diameter	4.5 mm

Installation dimensions

Width of the assembly cutout	35 mm
Length of the assembly cutout	65 mm

Material specifications

Flammability rating according to UL 94	V0 (Housing)
	V0 (Interlock)
Seal material	NBR
	NBR
Housing material	PA
Locking latch material	PA

Mechanical properties

Mechanical data

Locking type	Latch

Connection data

Tightening torque	0.8 Nm ... 1.2 Nm (For M4 mounting screws on the panel-mount

	base)

Mounting

Assembly note	Not for D series terminal adapters
	Not for HC-B 24-ADP-B..... adapter plates

Environmental and real-life conditions

Ambient conditions

Degree of protection	IP66
Enclosure rating (NEMA)	12 (UL 50e)
Impact strength	IK08
Ambient temperature (operation)	-40 °C ... 125 °C

Drawings

Dimensional drawing

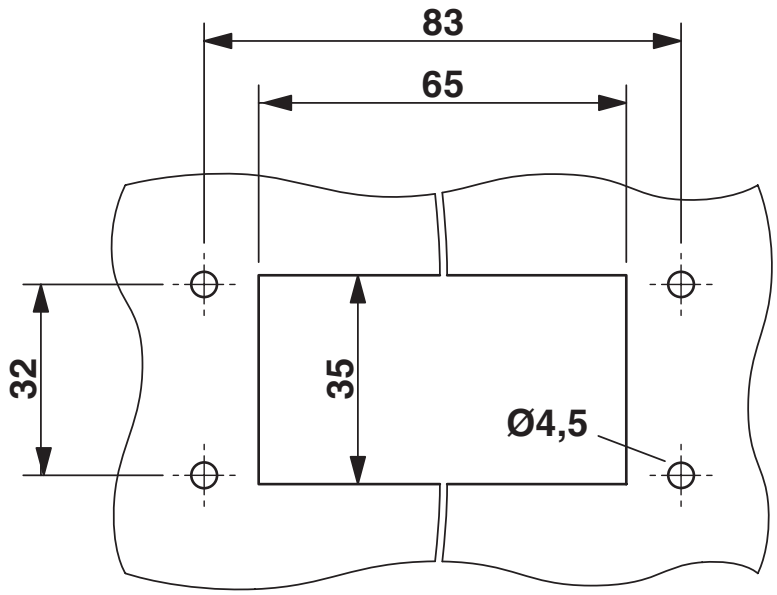

Mounting cutout

Dimensional drawing

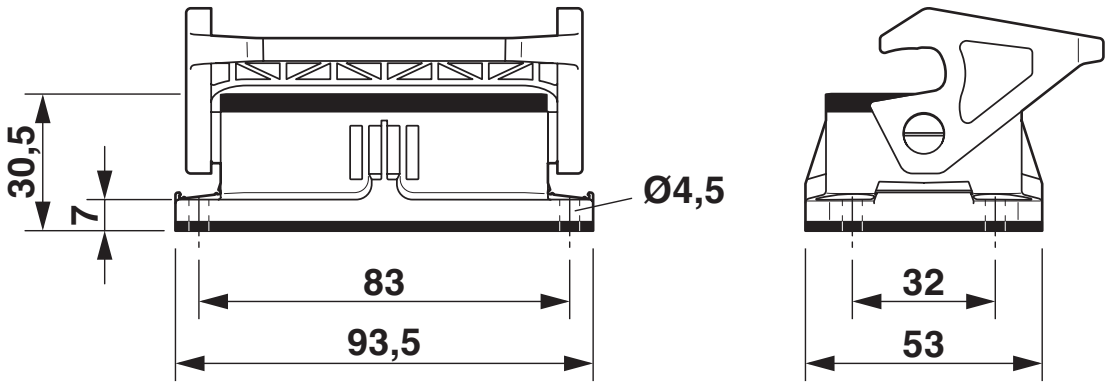

Dimensional drawing

Approvals

To download certificates, visit the product detail page: https://www.phoenixcontact.com/us/products/1407632

DNV
Approval ID: TAE000037S

cUL Recognized
Approval ID: E255026

UL Recognized
Approval ID: E255026

EAC
Approval ID: RU C-DE.AI30.B.01102

EAC
Approval ID: RU C-DE.BL08.B.00511

cULus Recognized

Classifications

ECLASS

ECLASS-11.0	27440202
ECLASS-12.0	27440202
ECLASS-13.0	27440202

ETIM

ETIM 9.0	EC000437

UNSPSC

UNSPSC 21.0	31261500

Environmental product compliance

EU RoHS

Fulfills EU RoHS substance requirements	Yes, No exemptions

China RoHS

Environment friendly use period (EFUP)	EFUP-E
	No hazardous substances above the limits

EU REACH SVHC

REACH candidate substance (CAS No.)	No substance above 0.1 wt%

Accessories

HC-B10-SG-RBK - Flat gasket

1407703

https://www.phoenixcontact.com/us/products/1407703

Replacement flat gasket, for HEAVYCON EVO panel mounting base type B10



HC-B10-SP-RBK - Profile gasket

1407707

https://www.phoenixcontact.com/us/products/1407707

Profile gasket for HEAVYCON EVO supporting base element type B10



HC-B10-SL-PLBK - Housing brackets

1407698

https://www.phoenixcontact.com/us/products/1407698



Replacement single locking latch for HEAVYCON EVO housing type B10, PA

US-EMP (20X9) - Snap-in markers

0829439

https://www.phoenixcontact.com/us/products/0829439



Snap-in markers, Card, white, unlabeled, can be labeled with: BLUEMARK ID COLOR, BLUEMARK ID, THERMOMARK PRIME, THERMOMARK CARD 2.0, THERMOMARK CARD, mounting type: snapped, lettering field size: 20 x 9 mm, Number of individual labels: 70

HC-B10-BC-HI-PLBK - Protective cover

1407693

https://www.phoenixcontact.com/us/products/1407693



Protective cover B10, for single locking latch, protective cover material: PC, height: 19.1 mm, seal: no

HC-B10-BCFS-P-BK - Protective cover

1346526

https://www.phoenixcontact.com/us/products/1346526



Protective cover B10, for single locking latch, protective cover material: PC, height: 26.3 mm, seal: no

US-EMP (20X9) CUS - Snap-in markers

0830028

https://www.phoenixcontact.com/us/products/0830028



Snap-in markers, can be ordered: by card, white, labeled according to customer specifications, mounting type: snapped into marker carrier, lettering field size: 20 x 9 mm, Number of individual labels: 70

HC-STA-B10-DC-PL - Protective cover

1421101

https://www.phoenixcontact.com/us/products/1421101



Protective cover, design: B10

Phoenix Contact 2024 © - all rights reserved
https://www.phoenixcontact.com

Phoenix Contact USA
586 Fulling Mill Road
Middletown, PA 17057, United States
(+717) 944-1300
info@phoenixcon.com