SPB 2,5/ 1-R - Plug

3043161

https://www.phoenixcontact.com/us/products/3043161

Please be informed that the data shown in this PDF document is generated from our online catalog. Please find the complete data in the user documentation. Our general terms of use for downloads are valid.

Plug, nom. voltage: 500 V, nominal current: 24 A, number of positions: 1, connection method: Spring-cage connection, Rated cross section: 2.5 mm^2, cross section: 0.08 mm^2- 4 mm^2, color: gray

Product description

Connector element right, left housing with engagement pin, right closed with cover

Your advantages

- Plug with bridging option, for use with basic terminal blocks
- The plug with spring-cage connection is assembled directly on site by snapping together single-position plug elements
- The ST-COMBI plugs for self-assembly provide solutions that users can implement themselves

Commercial data

Item number	3043161
Packing unit	50 pc
Minimum order quantity	50 pc
Sales key	BE02
Product key	BE2144
Catalog page	Page 321 (C-1-2019)
GTIN	4017918895020
Weight per piece (including packing)	3.69 g
Weight per piece (excluding packing)	3.653 g
Customs tariff number	85366990
Country of origin	PL

Technical data

Product properties

Product type	Terminal plug
Number of positions	1
Pitch	5.2 mm
Potentials	1

Insulation characteristics

Overvoltage category	III
Degree of pollution	3

Electrical properties

Rated surge voltage	6 kV

Connection data

Nominal cross section	2.5 mm²
Stripping length	8 mm ... 10 mm
Internal cylindrical gage	A3
Connection in acc. with standard	IEC 61984
Conductor cross section rigid	0.08 mm² ... 4 mm²
Cross section AWG	28 ... 12 (converted acc. to IEC)
Conductor cross section flexible	0.08 mm² ... 2.5 mm²
Conductor cross section, flexible [AWG]	28 ... 14 (converted acc. to IEC)
Conductor cross-section flexible (ferrule without plastic sleeve)	0.14 mm² ... 2.5 mm²
Flexible conductor cross section (ferrule with plastic sleeve)	0.14 mm² ... 2.5 mm²
2 conductors with the same cross section, flexible, with TWIN ferrule with plastic sleeve	0.5 mm²
Nominal current	24 A
Maximum load current	24 A (with 4 mm² conductor cross section)
Nominal voltage	500 V
Nominal cross section	2.5 mm²

Dimensions

Width	5.2 mm
Height	20 mm
Depth	39 mm
Length	20 mm
Pitch	5.2 mm

Material specifications

Color	gray
Flammability rating according to UL 94	V0
Insulating material group	I

Insulating material	PA
Static insulating material application in cold	-60 °C
Temperature index of insulation material (DIN EN 60216-1 (VDE 0304-21))	130 °C
Relative insulation material temperature index (Elec., UL 746 B)	130 °C
Fire protection for rail vehicles (DIN EN 45545-2) R22	HL 1 - HL 3
Fire protection for rail vehicles (DIN EN 45545-2) R23	HL 1 - HL 3
Fire protection for rail vehicles (DIN EN 45545-2) R24	HL 1 - HL 3
Fire protection for rail vehicles (DIN EN 45545-2) R26	HL 1 - HL 3
Calorimetric heat release NFPA 130 (ASTM E 1354)	28 MJ/kg
Surface flammability NFPA 130 (ASTM E 162)	passed
Specific optical density of smoke NFPA 130 (ASTM E 662)	passed
Smoke gas toxicity NFPA 130 (SMP 800C)	passed

Environmental and real-life conditions

Ambient conditions

Ambient temperature (operation)	-60 °C (max. operating temperature see derating curve)
Ambient temperature (storage/transport)	-25 °C ... 60 °C (for a short time, no longer than 24 h, -60°C to +70°C)
Ambient temperature (assembly)	-5 °C ... 70 °C
Ambient temperature (actuation)	-5 °C ... 70 °C
Permissible humidity (operation)	20 % ... 90 %
Permissible humidity (storage/transport)	30 % ... 70 %

Standards and regulations

Connection in acc. with standard	IEC 61984

Drawings

Diagram

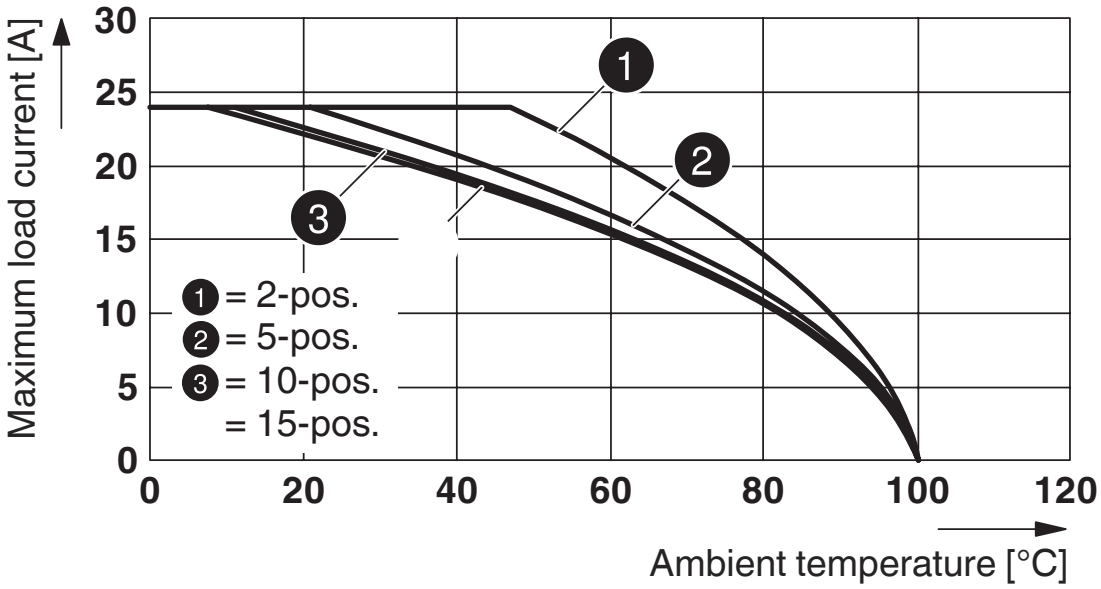

Derating curve for ST 2,5/ 1P, ST 2,5/ 2P, ST 2,5-TWIN/ 1P and for all plug versions SP... .

Diagram

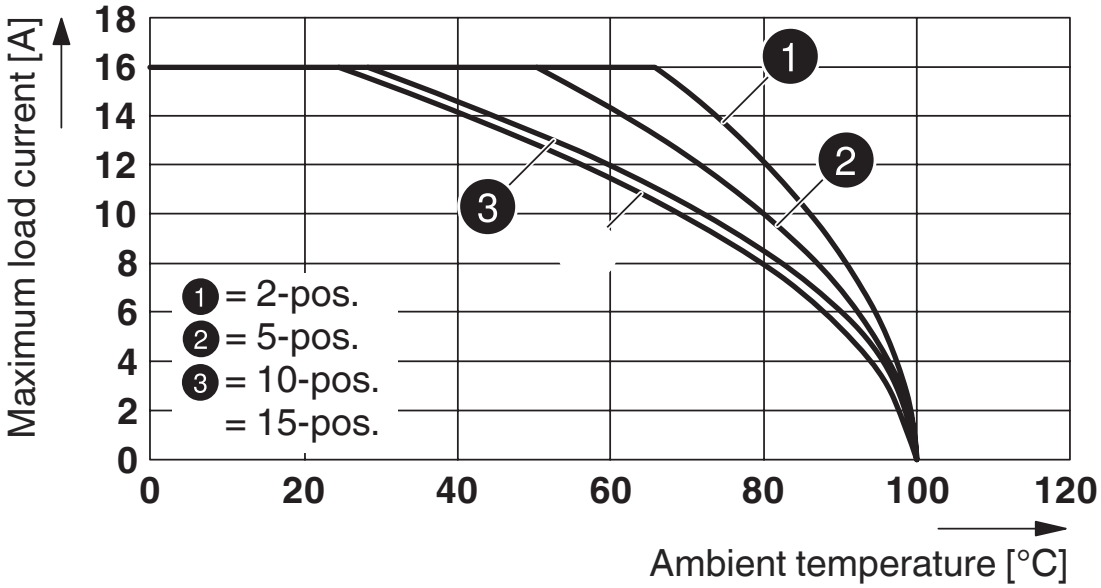

Derating curve for ST 2,5-TWIN-MT/1P, ST 2,5-TWIN-TG/1P and for all plug versions SP... .

Diagram

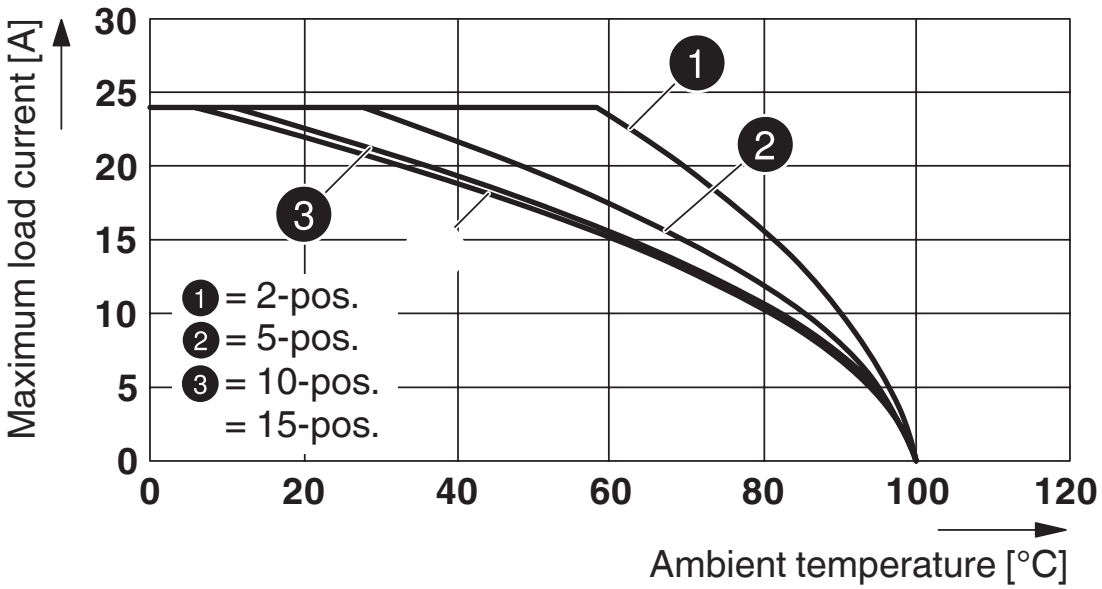

Derating curve for ST 2,5-QUATTRO/2P, ST 2,5-QUATTRO/4P and for all plug versions SP... .

Diagram

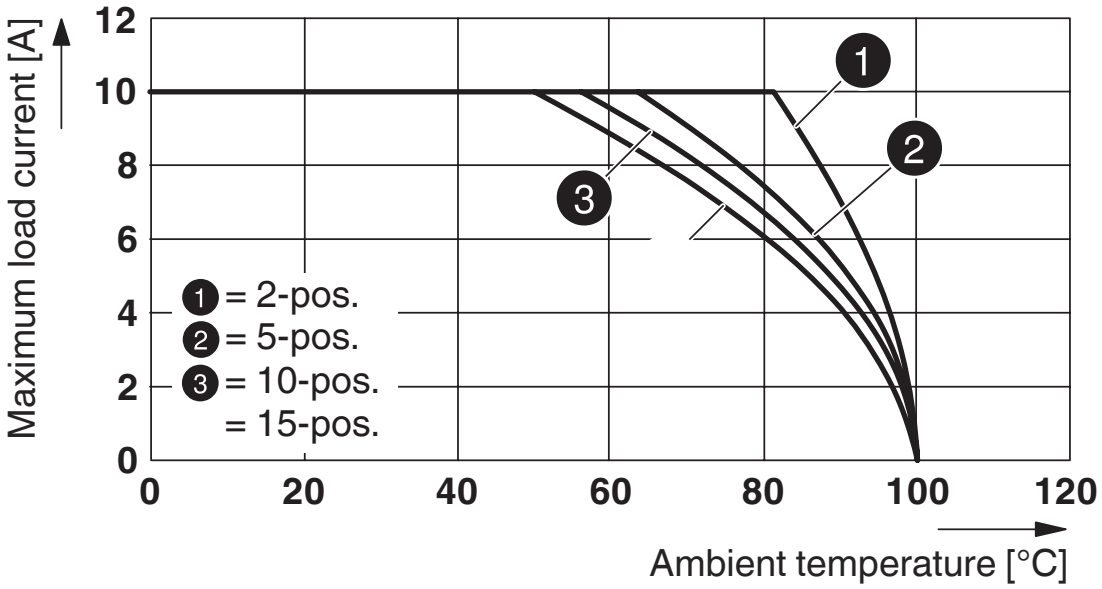

Derating curve for ST 2,5-4L/1P, ST 2,5-4L/2P and for all plug versions SP... .

Diagram

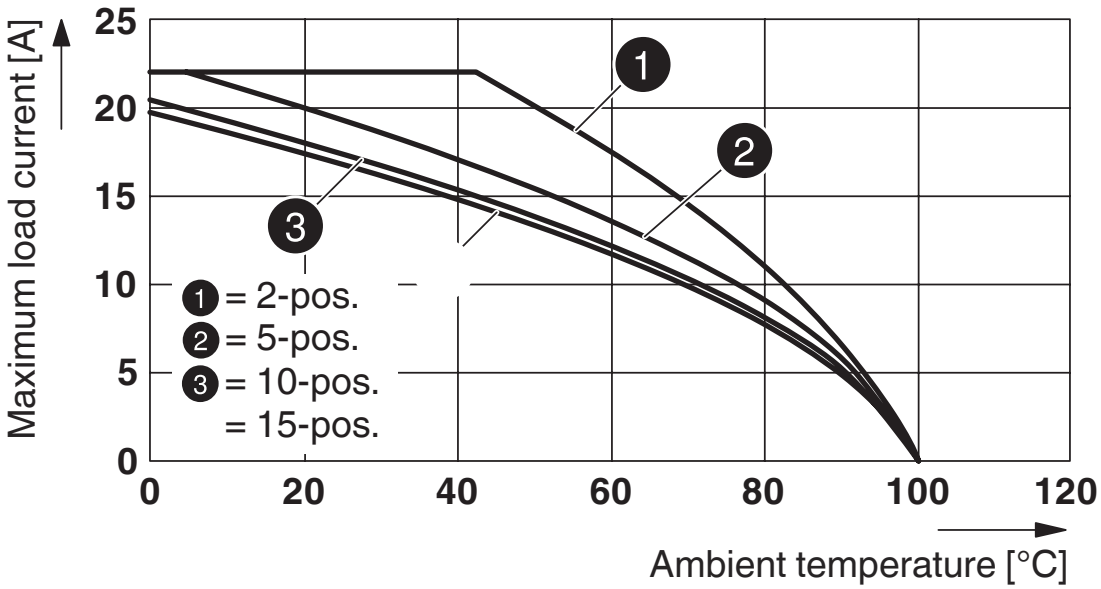

Derating curve for STTB 2,5/ 2P, STTB 2,5/ 2P-PV and for all plug versions SP... .

Circuit diagram

Schematic diagram

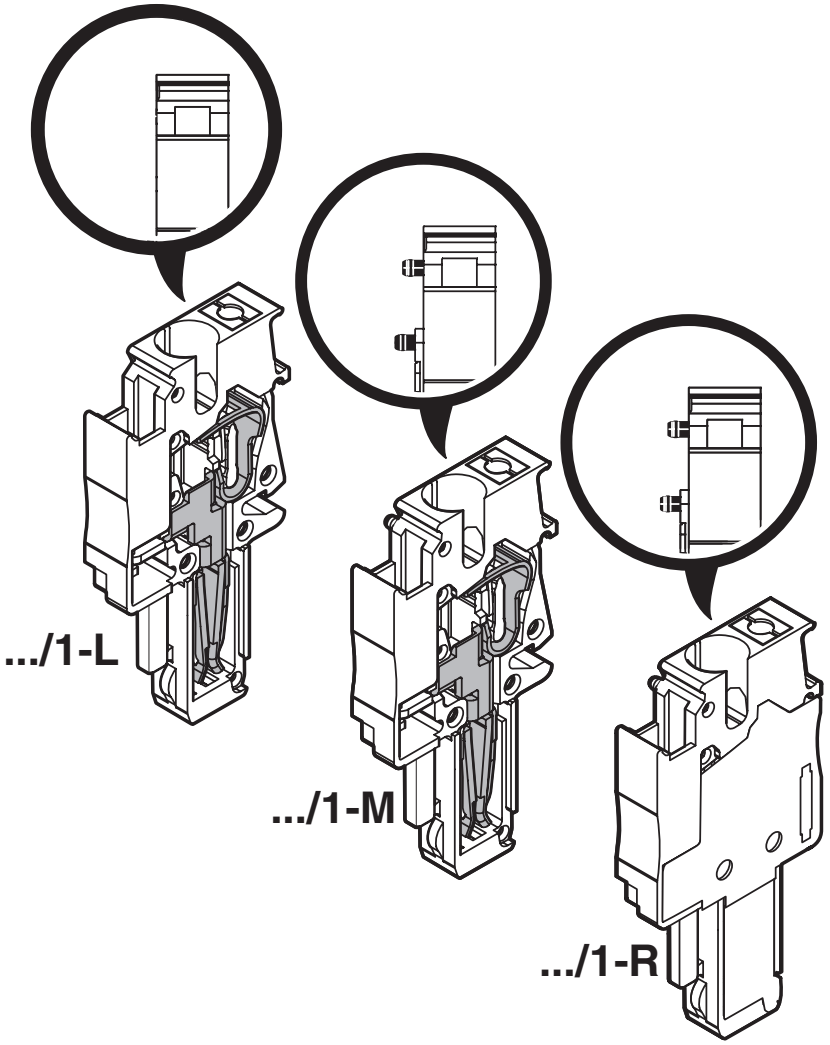

Approvals

To download certificates, visit the product detail page: https://www.phoenixcontact.com/us/products/3043161

CSA
Approval ID: 13631

	Nominal voltage U_N	Nominal current I_N	Cross section AWG	Cross section mm^2
Use group B				
	300 V	20 A	28 - 12	-
Use group C				
	300 V	20 A	28 - 12	-
Use group D				
	600 V	5 A	28 - 12	-

IECEE CB Scheme
Approval ID: DE1-62736/B1/B2

EAC
Approval ID: RU C-DE.BL08.B.00511

LR
Approval ID: LR2042068TA

BV
Approval ID: 27721/B0 BV

VDE Zeichengenehmigung
Approval ID: 40019518

	Nominal voltage U_N	Nominal current I_N	Cross section AWG	Cross section mm^2
Only flexible conductors	500 V	-	-	0.2 - 2.5
Only rigid conductors	500 V	-	-	0.2 - 4

cULus Recognized
Approval ID: E60425

cULus Recognized
Approval ID: E60425

DNV
Approval ID: TAE00001CS

Classifications

ECLASS

ECLASS-11.0	27141151
ECLASS-12.0	27141151
ECLASS-13.0	27250306

ETIM

ETIM 9.0	EC002021

UNSPSC

UNSPSC 21.0	39121400

Environmental product compliance

EU RoHS

Fulfills EU RoHS substance requirements	Yes, No exemptions

China RoHS

Environment friendly use period (EFUP)	EFUP-E
	No hazardous substances above the limits

EU REACH SVHC

REACH candidate substance (CAS No.)	No substance above 0.1 wt%

Accessories

Note: Applying some accessories below might limit this product.

FBS 2-5 - Plug-in bridge

3030161

https://www.phoenixcontact.com/us/products/3030161

Plug-in bridge, pitch: 5.2 mm, number of positions: 2, length: 23 mm, color: red

Max. current carrying capacity: 24 A

FBS 3-5 - Plug-in bridge

3030174

https://www.phoenixcontact.com/us/products/3030174

Plug-in bridge, pitch: 5.2 mm, number of positions: 3, length: 23 mm, color: red

Max. current carrying capacity: 24 A

FBS 4-5 - Plug-in bridge

3030187

https://www.phoenixcontact.com/us/products/3030187

Plug-in bridge, pitch: 5.2 mm, number of positions: 4, length: 23 mm, color: red

Max. current carrying capacity: 24 A

FBS 5-5 - Plug-in bridge

3030190

https://www.phoenixcontact.com/us/products/3030190

Plug-in bridge, pitch: 5.2 mm, number of positions: 5, length: 23 mm, color: red

Max. current carrying capacity: 24 A

FBS 10-5 - Plug-in bridge

3030213

https://www.phoenixcontact.com/us/products/3030213

Plug-in bridge, pitch: 5.2 mm, number of positions: 10, length: 23 mm, color: red

Max. current carrying capacity: 24 A

FBS 20-5 - Plug-in bridge

3030226

https://www.phoenixcontact.com/us/products/3030226

Plug-in bridge, pitch: 5.2 mm, number of positions: 20, color: red

Max. current carrying capacity: 24 A

FBS 50-5 - Plug-in bridge

3038930

https://www.phoenixcontact.com/us/products/3038930

Plug-in bridge, pitch: 5.2 mm, number of positions: 50, color: red

Max. current carrying capacity: 24 A

FBS 2-5 BU - Plug-in bridge

3036877

https://www.phoenixcontact.com/us/products/3036877

Plug-in bridge, pitch: 5.2 mm, number of positions: 2, color: blue

Max. current carrying capacity: 24 A

FBS 3-5 BU - Plug-in bridge

3036880

https://www.phoenixcontact.com/us/products/3036880

Plug-in bridge, pitch: 5.2 mm, number of positions: 3, color: blue

Max. current carrying capacity: 24 A

FBS 4-5 BU - Plug-in bridge

3036893

https://www.phoenixcontact.com/us/products/3036893

Plug-in bridge, pitch: 5.2 mm, number of positions: 4, color: blue

Max. current carrying capacity: 24 A

SPB 2,5/ 1-R - Plug

3043161

https://www.phoenixcontact.com/us/products/3043161

FBS 5-5 BU - Plug-in bridge

3036903

https://www.phoenixcontact.com/us/products/3036903

Plug-in bridge, pitch: 5.2 mm, number of positions: 5, color: blue

Max. current carrying capacity: 24 A

FBS 10-5 BU - Plug-in bridge

3036916

https://www.phoenixcontact.com/us/products/3036916

Plug-in bridge, pitch: 5.2 mm, number of positions: 10, color: blue

Max. current carrying capacity: 24 A

FBS 20-5 BU - Plug-in bridge

3036929

https://www.phoenixcontact.com/us/products/3036929

Plug-in bridge, pitch: 5.2 mm, number of positions: 20, color: blue

Max. current carrying capacity: 24 A

FBS 50-5 BU - Plug-in bridge

3032114

https://www.phoenixcontact.com/us/products/3032114

Plug-in bridge, pitch: 5.2 mm, number of positions: 50, color: blue

Max. current carrying capacity: 24 A

SPB 2,5/ 1-R - Plug

3043161

https://www.phoenixcontact.com/us/products/3043161

FBS 2-5 GY - Plug-in bridge

3038969

https://www.phoenixcontact.com/us/products/3038969

Plug-in bridge, pitch: 5.2 mm, number of positions: 2, color: gray

Max. current carrying capacity: 24 A

FBS 3-5 GY - Plug-in bridge

3038972

https://www.phoenixcontact.com/us/products/3038972

Plug-in bridge, pitch: 5.2 mm, number of positions: 3, color: gray

Max. current carrying capacity: 24 A

SPB 2,5/ 1-R - Plug

3043161

https://www.phoenixcontact.com/us/products/3043161

FBS 4-5 GY - Plug-in bridge

3038985

https://www.phoenixcontact.com/us/products/3038985

Plug-in bridge, pitch: 5.2 mm, number of positions: 4, color: gray

Max. current carrying capacity: 24 A

FBS 5-5 GY - Plug-in bridge

3038998

https://www.phoenixcontact.com/us/products/3038998

Plug-in bridge, pitch: 5.2 mm, number of positions: 5, color: gray

Max. current carrying capacity: 24 A

FBS 10-5 GY - Plug-in bridge

3039007

https://www.phoenixcontact.com/us/products/3039007

Plug-in bridge, pitch: 5.2 mm, number of positions: 10, color: gray

Max. current carrying capacity: 24 A

FBS 20-5 GY - Plug-in bridge

3038671

https://www.phoenixcontact.com/us/products/3038671

Plug-in bridge, pitch: 5.2 mm, number of positions: 20, color: gray

Max. current carrying capacity: 24 A

FBS 50-5 GY - Plug-in bridge

3032127

https://www.phoenixcontact.com/us/products/3032127

Plug-in bridge, pitch: 5.2 mm, number of positions: 50, color: gray

Max. current carrying capacity: 24 A

FBSR 2-5 - Plug-in bridge

3033702

https://www.phoenixcontact.com/us/products/3033702

Plug-in bridge, pitch: 5.2 mm, number of positions: 2, color: red

Max. current carrying capacity: 17.5 A

FBSR 3-5 - Plug-in bridge

3001591

https://www.phoenixcontact.com/us/products/3001591

Plug-in bridge, pitch: 5.2 mm, number of positions: 3, color: red

Max. current carrying capacity: 17.5 A

FBSR 4-5 - Plug-in bridge

3001592

https://www.phoenixcontact.com/us/products/3001592

Plug-in bridge, pitch: 5.2 mm, number of positions: 4, color: red

Max. current carrying capacity: 17.5 A

FBSR 5-5 - Plug-in bridge

3001593

https://www.phoenixcontact.com/us/products/3001593

Plug-in bridge, pitch: 5.2 mm, number of positions: 5, color: red

Max. current carrying capacity: 17.5 A

FBSR 10-5 - Plug-in bridge

3033710

https://www.phoenixcontact.com/us/products/3033710

Plug-in bridge, pitch: 5.2 mm, number of positions: 10, color: red

Max. current carrying capacity: 17.5 A

PDZ/2 - Strain relief

3040562

https://www.phoenixcontact.com/us/products/3040562

Strain relief, width: 9.6 mm, height: 28.9 mm, number of positions: 2, color: black

PDZ/4 - Strain relief

3040575

https://www.phoenixcontact.com/us/products/3040575

Strain relief, width: 19.8 mm, height: 28.9 mm, number of positions: 4, color: black

PR - Latching

3040559

https://www.phoenixcontact.com/us/products/3040559

Latching, width: 4.4 mm, height: 29.8 mm, number of positions: 1, color: orange

PR/2 - Latching

3040630

https://www.phoenixcontact.com/us/products/3040630

Latching, width: 10 mm, height: 29.8 mm, number of positions: 2, color: orange

PRT/2 - Latching

3040631

https://www.phoenixcontact.com/us/products/3040631

Latching, can only be released using a screwdriver, width: 9 mm, height: 23.2 mm, number of positions: 2, color: orange

PRZ - Latching

3040614

https://www.phoenixcontact.com/us/products/3040614

Latching, number of positions: 2, length: 64 mm, color: orange

SPB 2,5/ 1-R - Plug

3043161

https://www.phoenixcontact.com/us/products/3043161

SPB 2,5/ 1-L - Plug

3043103

https://www.phoenixcontact.com/us/products/3043103

Plug, nom. voltage: 500 V, nominal current: 24 A, number of positions: 1, connection method: Spring-cage connection, Rated cross section: 2.5 mm^2, cross section: 0.08 mm^2- 4 mm^2, color: gray

SPB 2,5/ 1-L BK - Plug

3215025

https://www.phoenixcontact.com/us/products/3215025

Plug, nom. voltage: 500 V, nominal current: 24 A, number of positions: 1, connection method: Spring-cage connection, Rated cross section: 2.5 mm^2, cross section: 0.08 mm^2- 4 mm^2, color: black

SPB 2,5/ 1-R - Plug

3043161

https://www.phoenixcontact.com/us/products/3043161

SPB 2,5/ 1-L BU - Plug

3043116

https://www.phoenixcontact.com/us/products/3043116

Plug, nom. voltage: 500 V, nominal current: 24 A, number of positions: 1, connection method: Spring-cage connection, Rated cross section: 2.5 mm^2, cross section: 0.08 mm^2- 4 mm^2, color: blue

SPB 2,5/ 1-L GNYE - Plug

3043129

https://www.phoenixcontact.com/us/products/3043129

Plug, nom. voltage: 500 V, nominal current: 24 A, number of positions: 1, connection method: Spring-cage connection, Rated cross section: 2.5 mm^2, cross section: 0.08 mm^2- 4 mm^2, color: green-yellow

SPB 2,5/ 1-R - Plug

3043161

https://www.phoenixcontact.com/us/products/3043161

SPB 2,5/ 1-M - Plug

3043132

https://www.phoenixcontact.com/us/products/3043132

Plug, nom. voltage: 500 V, nominal current: 24 A, number of positions: 1, connection method: Spring-cage connection, Rated cross section: 2.5 mm^2, cross section: 0.08 mm^2- 4 mm^2, color: gray

SPB 2,5/ 1-M BK - Plug

3215012

https://www.phoenixcontact.com/us/products/3215012

Plug, nom. voltage: 500 V, nominal current: 24 A, number of positions: 1, connection method: Spring-cage connection, Rated cross section: 2.5 mm^2, cross section: 0.08 mm^2- 4 mm^2, color: black

SPB 2,5/ 1-R - Plug

3043161

https://www.phoenixcontact.com/us/products/3043161

SPB 2,5/ 1-M BU - Plug

3043145

https://www.phoenixcontact.com/us/products/3043145

Plug, nom. voltage: 500 V, nominal current: 24 A, number of positions: 1, connection method: Spring-cage connection, Rated cross section: 2.5 mm^2, cross section: 0.08 mm^2- 4 mm^2, color: blue

SPB 2,5/ 1-M GNYE - Plug

3043158

https://www.phoenixcontact.com/us/products/3043158

Plug, nom. voltage: 500 V, nominal current: 24 A, number of positions: 1, connection method: Spring-cage connection, Rated cross section: 2.5 mm^2, cross section: 0.08 mm^2- 4 mm^2, color: green-yellow

ZBF 5:UNBEDRUCKT - Zack Marker strip, flat

0808642

https://www.phoenixcontact.com/us/products/0808642

Zack Marker strip, flat, Strip, white, unlabeled, can be labeled with: PLOTMARK, CMS-P1-PLOTTER, mounting type: snapped, for terminal block width: 5 mm, lettering field size: 5.1 x 5.2 mm, Number of individual labels: 10

ZBF 5 CUS - Zack Marker strip, flat

0825025

https://www.phoenixcontact.com/us/products/0825025

Zack Marker strip, flat, can be ordered: Strip, white, labeled according to customer specifications, mounting type: snap into flat marker groove, for terminal block width: 5 mm, lettering field size: 5.15 x 5.15 mm, Number of individual labels: 10

ZBF 5,LGS:FORTL.ZAHLEN - Zack Marker strip, flat

0808671

https://www.phoenixcontact.com/us/products/0808671

Zack Marker strip, flat, Strip, white, labeled, printed horizontally: consecutive numbers 1 ... 10, 11 ... 20, etc. up to 491 ... 500, mounting type: snapped, for terminal block width: 5 mm, lettering field size: 5.15 x 5.15 mm, Number of individual labels: 10

ZBF 5,QR:FORTL.ZAHLEN - Zack Marker strip, flat

0808697

https://www.phoenixcontact.com/us/products/0808697

Zack Marker strip, flat, Strip, white, labeled, Printed vertically: consecutive numbers 1 ... 10, 11 ... 20, etc. up to 91 ... 100, mounting type: snapped, for terminal block width: 5 mm, lettering field size: 5.15 x 5.15 mm, Number of individual labels: 10

ZBF 5,LGS:GERADE ZAHLEN - Zack Marker strip, flat

0810821

https://www.phoenixcontact.com/us/products/0810821

Zack Marker strip, flat, Strip, white, labeled, printed horizontally: consecutive even numbers 2 ... 20, 22 ... 40, etc. up to 82 ... 100, mounting type: snapped, for terminal block width: 5 mm, lettering field size: 5.15 x 5.15 mm, Number of individual labels: 10

ZBF 5,LGS:UNGERADE ZAHLEN - Zack Marker strip, flat

0810863

https://www.phoenixcontact.com/us/products/0810863

Zack Marker strip, flat, Strip, white, labeled, printed horizontally: Odd numbers 1 - 19, 21 - 39, etc. up to 81 - 99, mounting type: snapped, for terminal block width: 5 mm, lettering field size: 5.15 x 5.15 mm, Number of individual labels: 10

UC-TMF 5 - Marker for terminal blocks

0818153

https://www.phoenixcontact.com/us/products/0818153

Marker for terminal blocks, Sheet, white, unlabeled, can be labeled with: BLUEMARK ID COLOR, BLUEMARK ID, BLUEMARK CLED, PLOTMARK, CMS-P1-PLOTTER, mounting type: snapped, for terminal block width: 5.2 mm, lettering field size: 4.6 x 5.1 mm, Number of individual labels: 96

UC-TMF 5 CUS - Marker for terminal blocks

0824638

https://www.phoenixcontact.com/us/products/0824638

Marker for terminal blocks, can be ordered: by sheet, white, labeled according to customer specifications, mounting type: snap into flat marker groove, for terminal block width: 5.2 mm, lettering field size: 4.6 x 5.1 mm, Number of individual labels: 96

UCT-TMF 5 - Marker for terminal blocks

0828744

https://www.phoenixcontact.com/us/products/0828744

Marker for terminal blocks, Sheet, white, unlabeled, can be labeled with: TOPMARK NEO, TOPMARK LASER, BLUEMARK ID COLOR, BLUEMARK ID, BLUEMARK CLED, THERMOMARK PRIME, THERMOMARK CARD 2.0, THERMOMARK CARD, mounting type: snapped, for terminal block width: 5.2 mm, lettering field size: 4.4 x 4.7 mm, Number of individual labels: 72

UCT-TMF 5 CUS - Marker for terminal blocks

0829658

https://www.phoenixcontact.com/us/products/0829658

Marker for terminal blocks, can be ordered: by sheet, white, labeled according to customer specifications, mounting type: snap into flat marker groove, for terminal block width: 5.2 mm, lettering field size: 4.4 x 4.7 mm, Number of individual labels: 72

ISH 2,5/0,2 - Insulating sleeve

3002843

https://www.phoenixcontact.com/us/products/3002843

Insulating sleeve, color: white

ISH 2,5/0,5 - Insulating sleeve

3002856

https://www.phoenixcontact.com/us/products/3002856

Insulating sleeve, color: gray

ISH 2,5/1,0 - Insulating sleeve

3002869

https://www.phoenixcontact.com/us/products/3002869

Insulating sleeve, color: black

B-STIFT - Marker pen

1051993

https://www.phoenixcontact.com/us/products/1051993

Marker pen, for manual labeling of unprinted Zack strips, smear-proof and waterproof, line thickness 0.5 mm

X-PEN 0,35 - Marker pen

0811228

https://www.phoenixcontact.com/us/products/0811228

Marker pen without ink cartridge, for manual labeling of markers, labeling extremely wipe-proof, line thickness 0.35 mm

ST-BW - Actuation tool

1207608

https://www.phoenixcontact.com/us/products/1207608

Actuation tool, for all 2.5 mm^2 - 4.0 mm^2 spring-cages

DFS-SPB 2,5 - Flange cover

3061444

https://www.phoenixcontact.com/us/products/3061444

Flange cover, width: 4.5 mm, height: 24.7 mm, color: gray

Phoenix Contact 2024 © - all rights reserved
https://www.phoenixcontact.com

Phoenix Contact USA
586 Fulling Mill Road
Middletown, PA 17057, United States
(+717) 944-1300
info@phoenixcon.com