CC-AT62-S20-R16/18-NI - Crimp contact

1521064

https://www.phoenixcontact.com/us/products/1521064

Please be informed that the data shown in this PDF document is generated from our online catalog. Please find the complete data in the user documentation. Our general terms of use for downloads are valid.



Crimp contact, contact diameter: 1 mm, turned, Socket, contact material: Copper alloy, contact surface: nickel-plated, connection cross section: 0.75 mm^2 ... 1.5 mm^2, AWG 18 ... 16

Commercial data

Item number	1521064
Packing unit	100 pc
Minimum order quantity	100 pc
Sales key	BF72
Product key	BF2IFB
GTIN	4063151985547
Weight per piece (including packing)	22.22 g
Weight per piece (excluding packing)	0.3 g
Country of origin	US

Technical data

Notes

General	AT62-201-20141

Trade restriction

CE note	The products are offered exclusively for export outside the EU and the European Economic Area.

Mounting

Assembly note	Crimp according to IPC-WHMA-A-620 with an 8-indent crimp tool, e.g. Daniels AF8-TH1A, Rennsteig 8782 0009 6 RT

Product properties

Product type	Crimp contact
Series	ATM06
Type	Individual female contact
Contact material type	turned

Data management status

Article revision	00

Connection data

Connection method	Crimp connection
Contact connection type	Socket
Connection technology	Crimp connection
Conductor cross section	0.75 mm² ... 1.5 mm²
Connection cross section AWG	18 ... 16
Stripping length of the individual wire	5 mm
Conductor cross section flexible	0.75 mm² ... 1.5 mm²

Material specifications

Contact material	Copper alloy
Contact surface material	nickel-plated

Dimensions

Mechanical characteristics

Contact diameter	1 mm

Mechanical properties

Mechanical data

Insertion/withdrawal cycles	≥ 100

Environmental and real-life conditions

Ambient conditions

Ambient temperature (operation)	-55 °C ... 125 °C

Drawings

Dimensional drawing

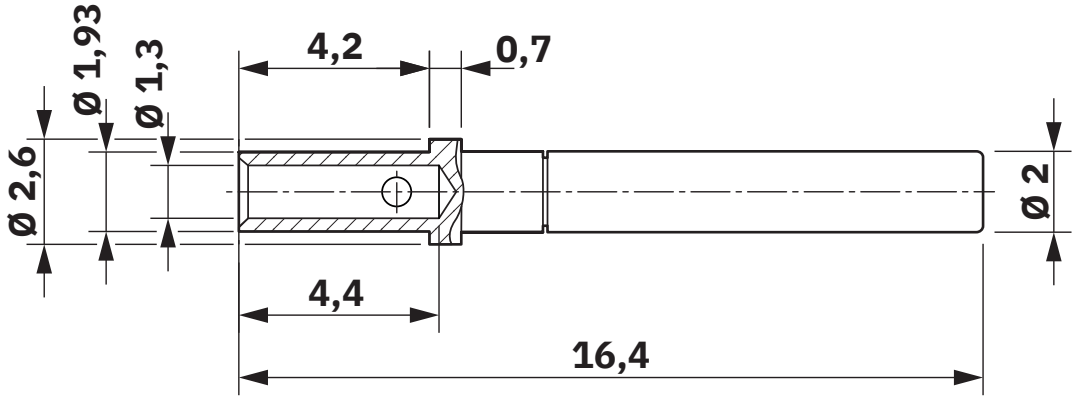

Dimensional drawing

Classifications

ECLASS

ECLASS-11.0	27440102
ECLASS-12.0	27440116
ECLASS-13.0	27440116

Environmental product compliance

EU RoHS

Fulfills EU RoHS substance requirements	Yes, No exemptions

China RoHS

Environment friendly use period (EFUP)	EFUP-E
	No hazardous substances above the limits

EU REACH SVHC

REACH candidate substance (CAS No.)	No substance above 0.1 wt%

Phoenix Contact 2024 © - all rights reserved
https://www.phoenixcontact.com

Phoenix Contact USA
586 Fulling Mill Road
Middletown, PA 17057, United States
(+717) 944-1300
info@phoenixcon.com