NOTICE OF PROPRIETARY RIGHTS THIS DOCUMENT CONTAINS CONFIDENTIAL DATA, INCLUDING TRADE SECRETS, PROPRIETARY TO TIMES MICROWAVE SYSTEMS. DISCLOSURE OF THIS DATA IS EXPRESSLY CONDITIONED UPON YOUR ASSENT THAT ITS USE IS LIMITED TO USE WITH IN YOUR COMPANY ONLY. ANY OTHER USE IS STRICTLY PROHIBITED WITHOUT THE PRIOR WRITTEN CONSENT OF TIMES MICROWAVE SYSTEMS.

SYM	REVISION DESCRIPTION	DFTM	DATE	APPD	APPD
A	RELEASED FOR PRODUCTION	Joslen	2018/01/22	TZ	2018/01/22
B	Two nuts option for all 900 cable	Patrick	2019/01/11	Joslen	2019/01/11

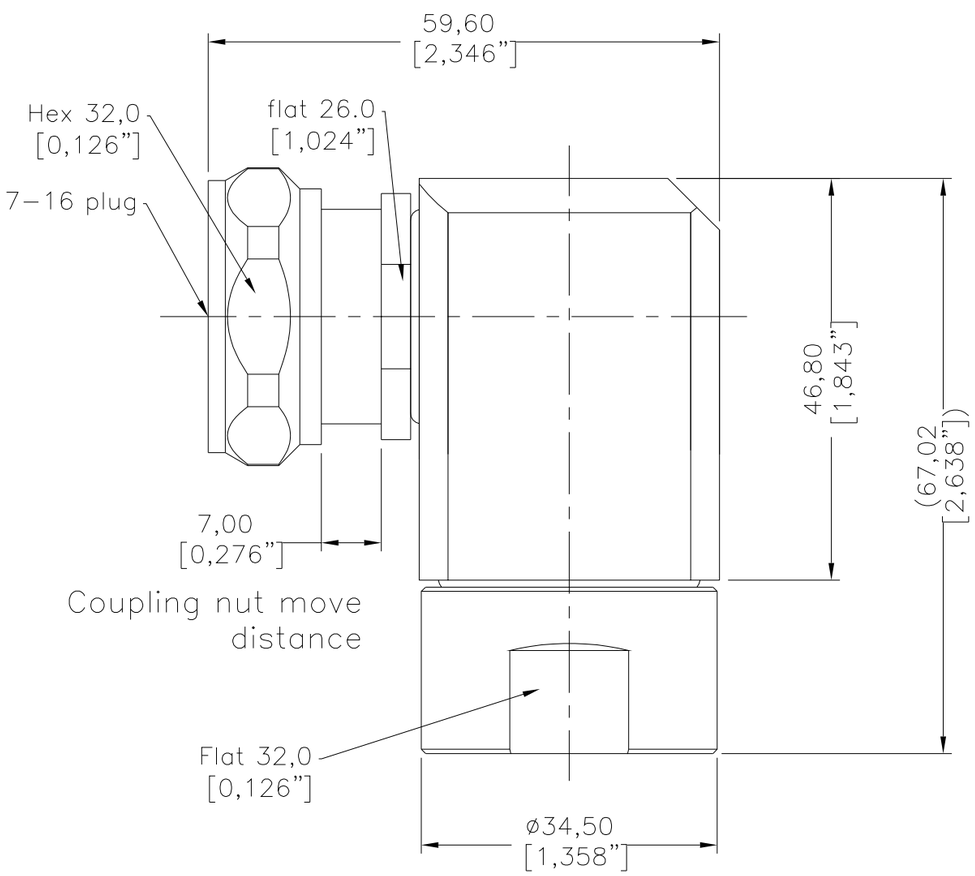

Option

for LMR–900–DB/–FR

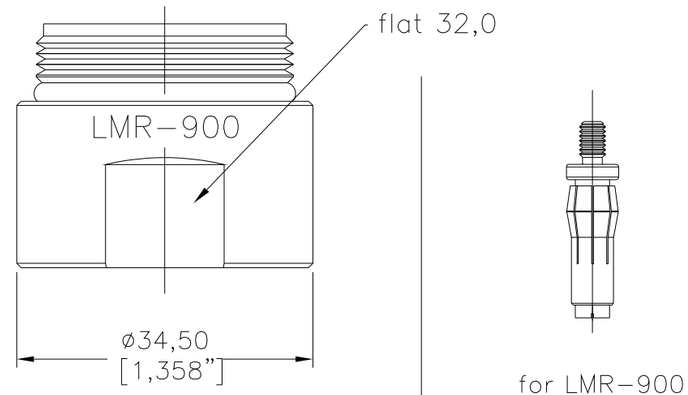

for LMR–900–LLPX/SFT–900

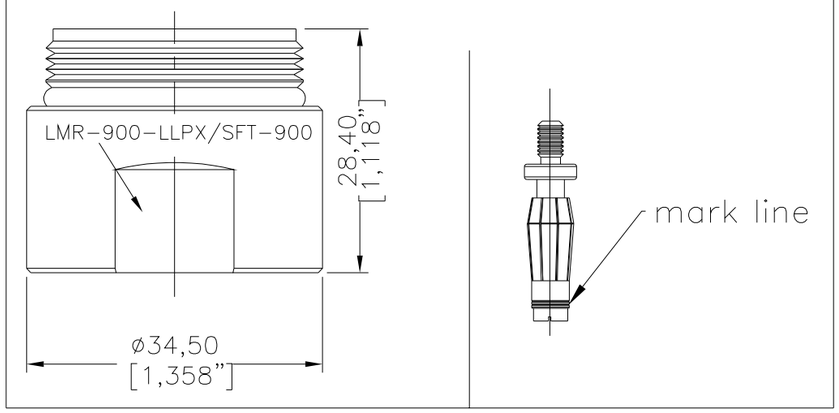

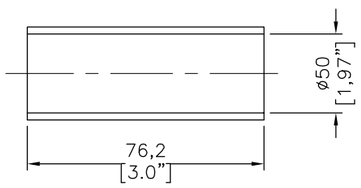

Shrink Tube (1,97"x3,0" 3:1)

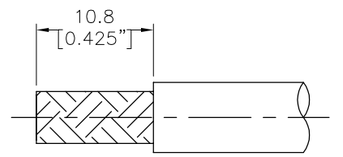

RECOMMENDED CABLE STRIPPING DIM'S
Connector adds: 36.0 mm

I. MATERIALS & FINISHES

Components	Materials	Finishes	Thk. (µ")
Body	Brass	Albaloy	100
Center Cont.	Brass/QBe2	Silver	200
Coupling Nut	Brass	Nickel	100
Insulator	PTFE	--	--
Gasket	Silicone	--	--

II. ELECTRICAL PROPERTIES

Impedance (Ω):	50
Frequency Range (GHz):	DC to 3 GHz
Working Voltage (V):	2500
Insulation Resistance (MΩ):	≥10000
VSWR:	≤1.25
Insertion Loss(dB, f/GHz):	-0.1x $\sqrt{f}$

III. ENVIRONMENT PROPERTIES

Temperature Range:	-40°c~+85°c
Thermal Shock:	MIL-STD 202G, Meth.107, Cond.B
Vibration:	MIL-STD 202G, Meth.204, Cond.B
Shock:	MIL-STD 202G, Meth.213, Cond I
Climatic Class:	IEC 60068 55/155/56
(2002/95/EC)RoHS:	Compliant

IV. MECHANICAL PROPERTIES

Center Cont.:	Finger Contact
Outer Cont.:	Clamp
Coupling Nut Torque (N.m):	25
Cbl-Connector Retention Force (N):	500
Durability (cycles):	500

Compatible with: IEC 61169-4

MATL:	UNLESS OTHERWISE SPECIFIED	DFTM.	patrick
	ALL DIMENSIONS ARE IN mm MACHINED SURFACES FINISH 1.6 RMS MAX. REMOVE ALL BURRS 0.15X45° MAX. BREAK MACHINE CORNERS 0.15X45° D MAX. FILLET R. TOLERANCES ON DECIMALS .X ±0.3 .XX ±0.15 ANGLES ±2° FRACTIONS ± N/A	DATE	2019/01/11
		CHKD	Monica
USED ON: O		DATE	2019/01/11
		APPD	Joslen
SCALE: N/A / DWG SIZE A4	DO NOT SCALE DRAWING	CODE IDENT	68999
		DATE	2019/01/11

TIMES MICROWAVE SYSTEMS
An Amphenol Company

EZ-900-716MC-RA-2-SP

7-16 Male (Plug) Right Angle Non- Solder Pin Connector with Retractable Coupling Nut for LMR-900/LMR-900-LLPX/SFT-900 Cable

SHT 1 OF 1 | 3190-6423 | REV B