E18027

Female cordset

ADOAA050MSS0004A05

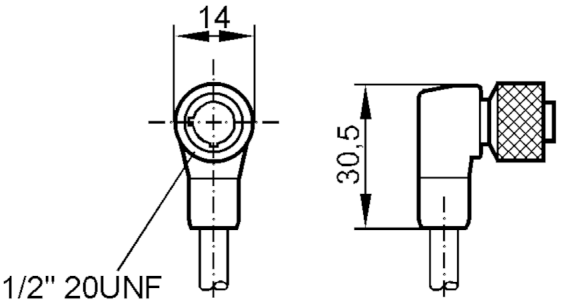

Electrical data		
Operating voltage	[V]	< 250 AC/DC
Max. current load total	[A]	4
Operating conditions		
Ambient temperature	[°C]	-40...90
Protection		IP 68
Mechanical data		
Weight	[g]	181.437
Material		TPU (urethane)
Molded-body material		TPU (urethane)
Material nut		brass, nickel-plated
Remarks		
Pack quantity		1 pcs.

Electrical connection

Cable: 4 m, PUR, black, Ø 5.3 mm; 5 x 0.34 mm² (19 x Ø 0.16 mm) / AWG 22

Electrical connection - Socket

Connector: 1 x 1/2", angled; coding: C; Moulded body: TPU (urethane); Locking: brass, nickel-plated



E18027

Female cordset

ADOAA050MSS0004A05

Connection

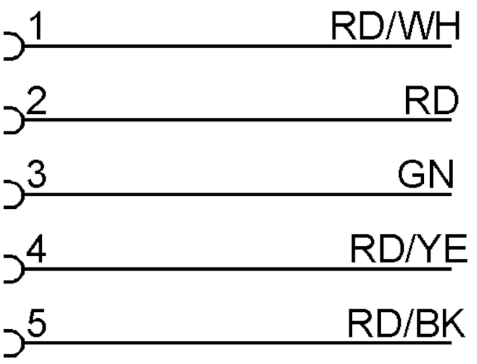

	Core colors :
BK =	black
GN =	green
RD =	red
WH =	white
YE =	yellow