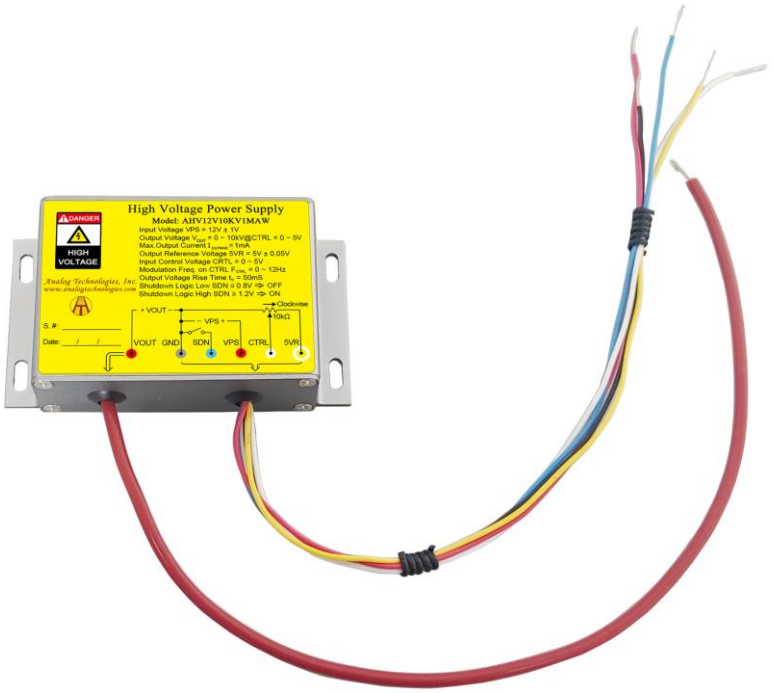

Figure 1.1. Top View of AHV12V10KV1MAW



Figure 1.2. Side View

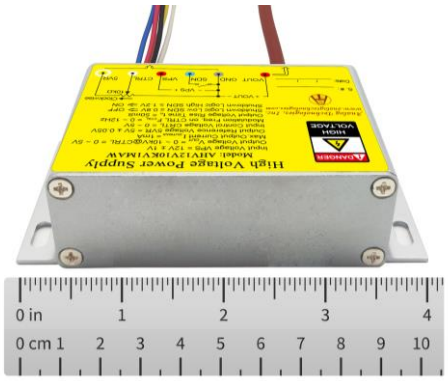

Figure 1.3. Side View



Figure 1.4. Side View

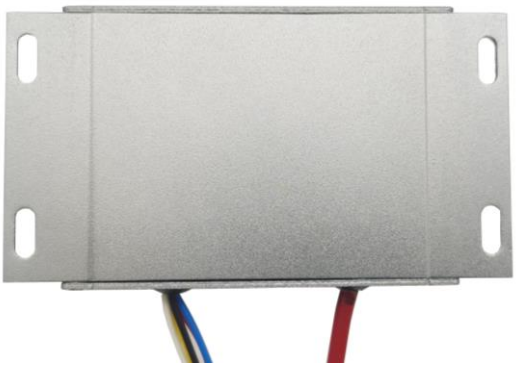

Figure 1.5. Bottom View

©Copyrights 2000-2023, Analog Technologies, Inc. All Rights Reserved.

FEATURES

- Input Power Voltage: 12V ± 1V
- Input Current Range: 350mA to 1.2A
- Output Voltage: 0 to 10kV@CTRL = 0 to 5V
- Max. Output Current: 1mA
- Reference Voltage: 5V ± 0.05V
- Input Control Voltage: 0 to 5V
- Electronic Shutdown Control Available
- Zero EMIs and Good Heat Sinking by Metal Enclosure

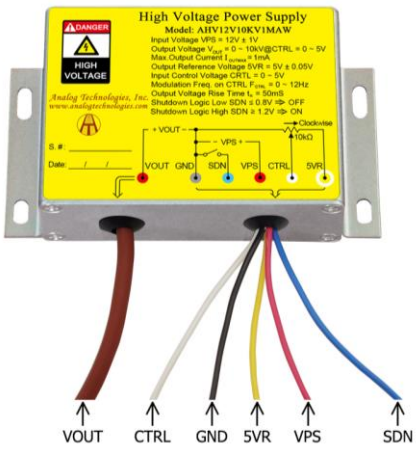

Figure 2. The Connecting Lead Wires of AHV12V10KV1MAW

APPLICATIONS

This power module, AHV12V10KV1MAW, is designed for achieving DC-DC conversion from low voltage to high voltage as a power supply source. It can be used for:

- X-ray Machine
- Spectral Analysis
- Nondestructive Inspection
- Semiconductor Manufacturing Equipment
- Particle Accelerator
- Capillary Electrophoresis
- Particles Injection
- Physical Vapor Phase Deposition
- Electrospinning Preparation of Nanofiber
- Glass/ Fabric Coating
- DC Reactive Magnetron Sputtering

Table 1. Pin Names, Colors, Functions and Specifications.

No.	Name	Description	Type	Color		Min.	Typ.	Max.
1	SDN	Shutdown logic low	Digital input		Blue	0V		0.8V
		Shutdown logic high				1.2V		5V
2	5VR	Reference voltage	Analog output		Yellow		5V	
3	CTRL	Regulation	Analog input		White	0V		5V
4	VPS	Input voltage	Power supply input		Red	11V	12V	13V
5	GND	Ground	Ground for power supply and analog & digital signals		Black		0V	
6	VOUT	Output high voltage	Power output		Brown	0V		10kV

©Copyrights 2000-2023, Analog Technologies, Inc. All Rights Reserved. Updated on 12/27/2023 1161 Ringwood Ct, #110, San Jose, CA 95131, U. S. A.

DESCRIPTION

Figure 1 shows the actual pictures of AHV12V10KV1MAW. Figure 2 shows its connecting wires. More detail information is given in Table 1. The high voltage output can be set to a constant value between 0V to 10kV by connecting the CTRL port to the central tap of a POT (Potentiometer) or modulated by an AC signal ranging from 0V to 5V, as see Figure 3 and Figure 4 respectively. The output voltage equals to 2000 times the input control voltage: $V_{VOUT}=2000\times V_{CTRL}$.

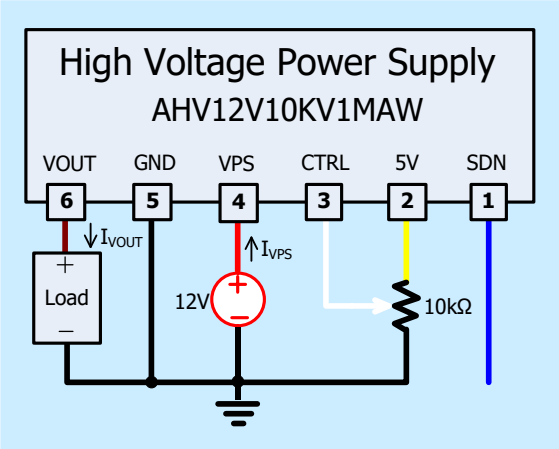

Figure 3. Setting Output to be a Constant Voltage

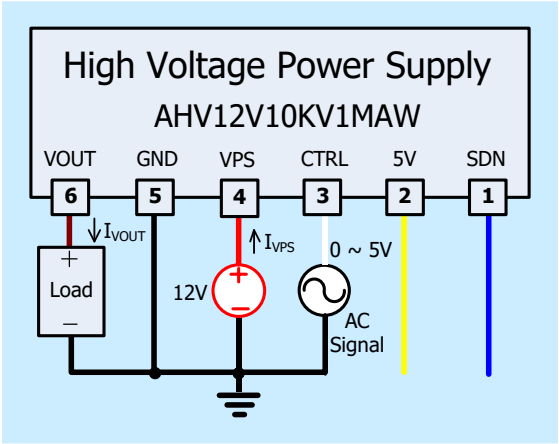

Figure 4. Modulating Output by an AC Signal Source

Please note that the modulation signal must have a low frequency ≤ 10Hz and the value range must be $0V \le V_{CTRL} \le 5V$. The equivalent input circuit for the CTRL is shown in Figure 5.

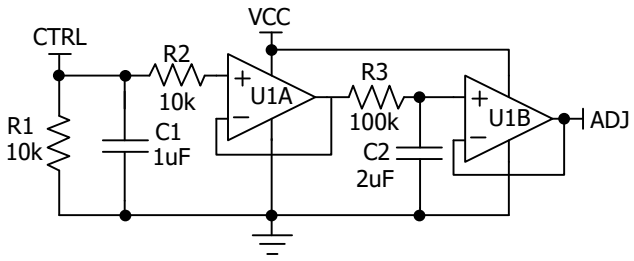

Figure 5. The Equivalent Circuit for CTRL Port

To shutdown AHV12V10KV1MAW, pull down SDN pin to <0.8V; to turn it on, leave SDN pin unconnected or pull it >1.2V. The maximum voltage allowed on the SDN pin is 5V. The equivalent circuit for SDN port is shown in Figure 6.

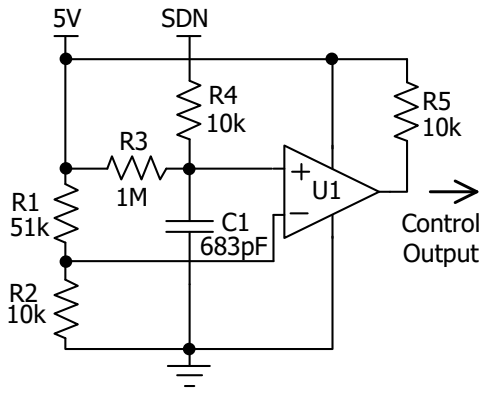

Figure 6. The Equivalent Circuit for SDN Port

USING AHV12V10KV1MAW

This high voltage power supply must be mounted tightly onto a metal plate, ideally, thus expanding its heating sinking capacity of the metal enclosure. Sufficient ventilation must be provided to keep the power supply surface temperature under 55°C.

SAFETY PRECAUTIONS

Although AHV12V10KV1MAW high voltage power supply comes with an over current protection circuit, a short circuit at the output should always be avoided. Make sure the high voltage wire for connecting VOUT node has sufficient insulation capability with its surrounding objects.

©Copyrights 2000-2023, Analog Technologies, Inc. All Rights Reserved. Updated on 12/27/2023 1161 Ringwood Ct, #110, San Jose, CA 95131, U. S. A.

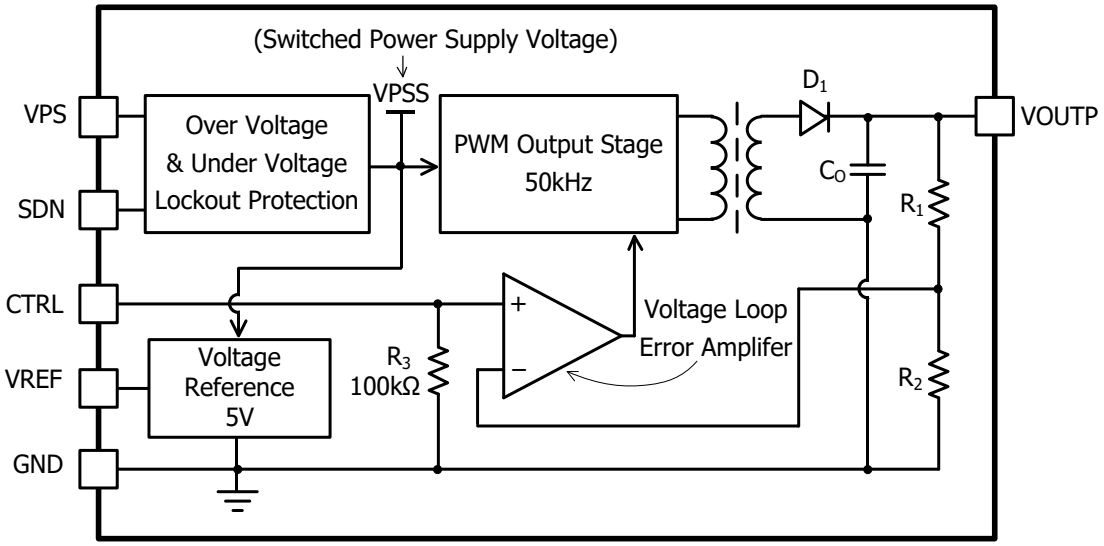

VOUTP = N×V_{CTRL}, where N is the amplification factor: N = R_1/R_2.

High Voltage Power Supply Function Block Diagram

SPECIFICATIONS

Table 2. Characteristics. T_A = 25°C, unless otherwise noted.

Parameter	Symbol	Test Conditions	Min.	Typ.	Max.	Unit/Note
Input Power Supply Voltage	V_{VPS}		11	12	13	V
Input Power Supply Quiescent Current	I_{VPS_QC}	I_{VOUT} = 0mA V_{SDN} = V_{CTRL} = 5V	350	400	450	mA
Input Power Supply Current at Full Load	I_{VPS_FL}	I_{VOUT} = 1.0mA	1.1	1.2	1.3	A
Input Power Supply Current at Shutdown	I_{VPS_SHDN}	T_A = −10°C ~ 55°C		13		mA
Modulation Voltage Range on CTRL	V_{CTRL}		0		5	V
Modulation Frequency Range on CTRL	f_{CTRL}		0		12	Hz
Shutdown Port Current	I_{SDNL}	0 ≤ V_{SDNL} < 0.8V	4		4.8	μA
	I_{SDNH}	1.2V < V_{SDNL} < 5V	0		3.6	μA
Shutdown Voltage Logic Low	V_{SDNL}		0		0.8	V
Shutdown Voltage Logic High	V_{SDNH}		1.2		5	V
Output Voltage Range	V_{VOUT}	I_{VOUT} = 0 ~ 1.0mA	0		10,000	V
Output Current Range	$I_{VOUTMAX}$	V_{VPS} = 11V ~ 13V	0		1.0	mA
Reference Output Voltage Range	V_{5VR}	T_A = −10°C ~ 55°C I_{5VR} < 1mA	4.95	5	5.05	V
Reference Output Current Range	I_{5VR}	T_A = −10°C ~ 55°C V_{5VR} = 0 ~ 5V	0		1.0	mA

©Copyrights 2000-2023, Analog Technologies, Inc. All Rights Reserved. Updated on 12/27/2023 1161 Ringwood Ct, #110, San Jose, CA 95131, U. S. A.

Parameter		Symbol	Test Conditions	Min.	Typ.	Max.	Unit/Note
Output Load Resistance Range				$\frac{V_{VOUT}}{I_{VOUT}}$		∞	MΩ
Output Voltage Ripple		V_{VOUT_RP}	Bandwidth = 1MHz R_{LOAD} = 10MΩ V_{VOUT} = 10kV		≤5.0		V_{P-P}
Output Voltage Temperature Coefficient		TCV_{VOUT} (2)	V_{VPS} = 12V V_{CTRL} = V_{5VR} = 5V V_{VOUT} = 10kV I_{VOUT} = 1mA T_A = −10°C ~ 55°C		≤0.01		%/°C
Output Voltage Range v.s. Temperature		$V_{VOUT}(T)$	V_{VPS} = 12V V_{CTRL} = V_{5VR} = 5V V_{VOUT} = 10kV I_{VOUT} = 1mA T_A = −10°C ~ 55°C	$0.99V_{VOUT}$	V_{VOUT}	$1.01V_{VOUT}$	V
Output Voltage Drift	Short Term Drift	$\frlvert\Delta V_{VOUT}/V_{VOUT}\frrvert$ / Δt (min)	V_{VPS} = 12V V_{CTRL} = V_{5VR} = 5V V_{VOUT} = 10kV I_{VOUT} = 1mA T_A = −10°C ~ 55°C		≤0.5		%/min
	Long Term Drift	$\frlvert\Delta V_{VOUT}/V_{VOUT}\frrvert$ / Δt (h)			≤1		%/h
Output Voltage Rise Time		t_r	V_{VOUT} (t_1) = 1000V V_{VOUT} (t_2) = 9000V R_{Load} = 10MΩ		50		ms
Output Voltage Fall Time		t_f	V_{VOUT} (t_2) = 9000V V_{VOUT} (t_3) = 1000V R_{Load} = 10MΩ		100		ms
Mean Time Between Failure		MTBF			1M		h
Instantaneous Short Circuit Current at the Output		I_{VOUT_SC}			≤1000		mA
Load Regulation		$\frlvert\Delta V_{VOUT}/V_{VOUT}\frrvert$ / ΔI_{VOUT}	V_{VOUT} = 10kV I_{VOUT} = 1mA		≤0.05		%/mA
Full Load Efficiency		η (3)	V_{VPS} = 12V V_{VOUT} = 10kV I_{VOUT} = 1mA		≥70		%
Operating Temperature Range		T_{opr}		−10		55	°C
Storage Temperature Range		T_{stg}		−20		85	°C
External Dimensions				82×55×28			mm
				3.23×2.17×1.10			inch
Weight					210		g
					0.46		lbs
					7.4		Oz

©Copyrights 2000-2023, Analog Technologies, Inc. All Rights Reserved. Updated on 12/27/2023 1161 Ringwood Ct, #110, San Jose, CA 95131, U. S. A.

TESTING DATA

Test conditions: V_{VPS} = 12V, T_A = 25°C, R_{LOAD} = 10MΩ

DC Testing

The measured output voltage, V_{VOUT}, corresponding to the control port input voltage, V_{CTRL}, is shown in Figure 7.

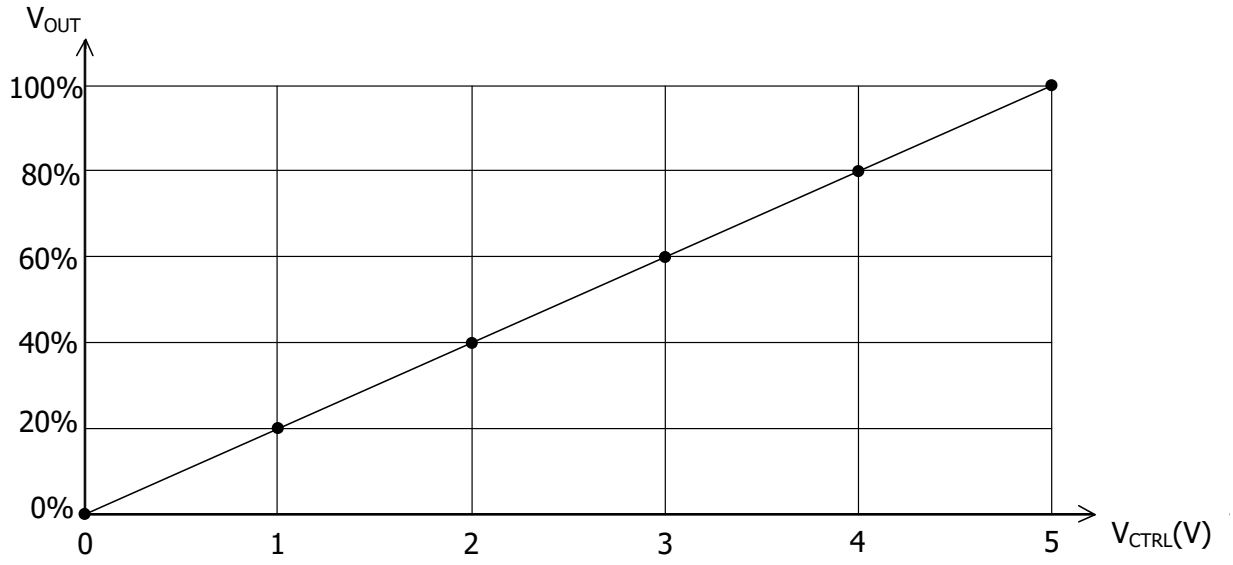

Figure 7. V_{CTRL} vs. V_{VOUT}

AC Testing

To test the analog modulation function, a triangle and sine-wave voltage signals are applied to the CTRL port as the input source signal respectively. Figure 8 and 9 show both the input signal and the output signal waveforms when using the triangle and sine-wave signals at the CTRL port respectively.

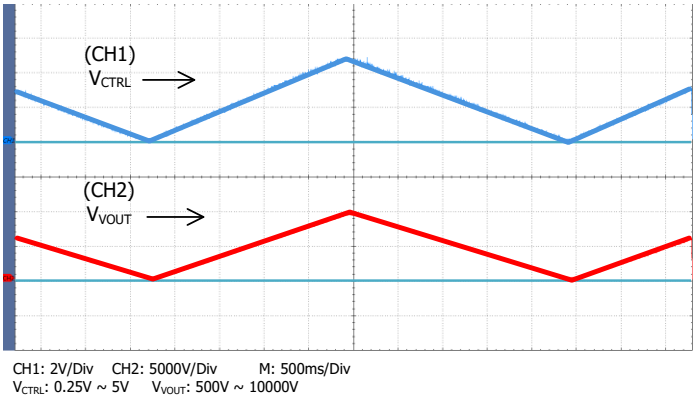

Figure 8. Triangle Wave Modulation

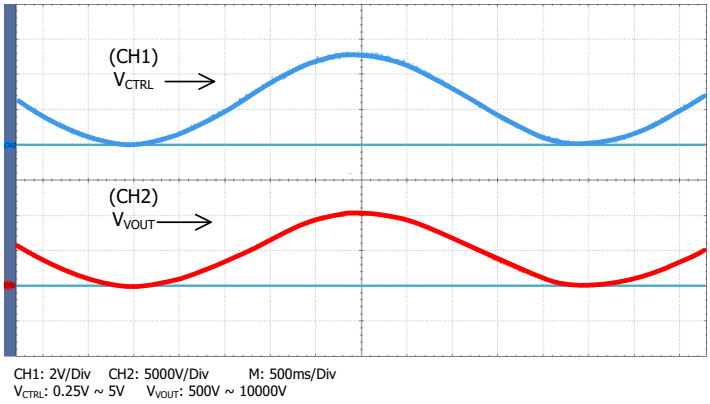

Figure 9. Sine Wave Modulation

©Copyrights 2000-2023, Analog Technologies, Inc. All Rights Reserved. Updated on 12/27/2023 1161 Ringwood Ct, #110, San Jose, CA 95131, U. S. A.

To test the rise and fall times at the output, a step function signal is applied to the CTRL port. The testing results are shown in Figure 10, Figure 11, and Figure 12. As shown in Figure 11 and Figure 12, a square wave of 0.25V ~ 5V, f = 0.10Hz, is applied to CTRL port, the output waveform fall time is measured to be about 100ms and the rise time is about 50ms. These two values are not the same, that is because on the rising trail, the power supply injects a current to the load; while on the falling trail, the best the power supply can do is to stop its output current and let the load resistor drain the output filtering capacitor to a lower voltage, and the draining current is much smaller than the injection current.

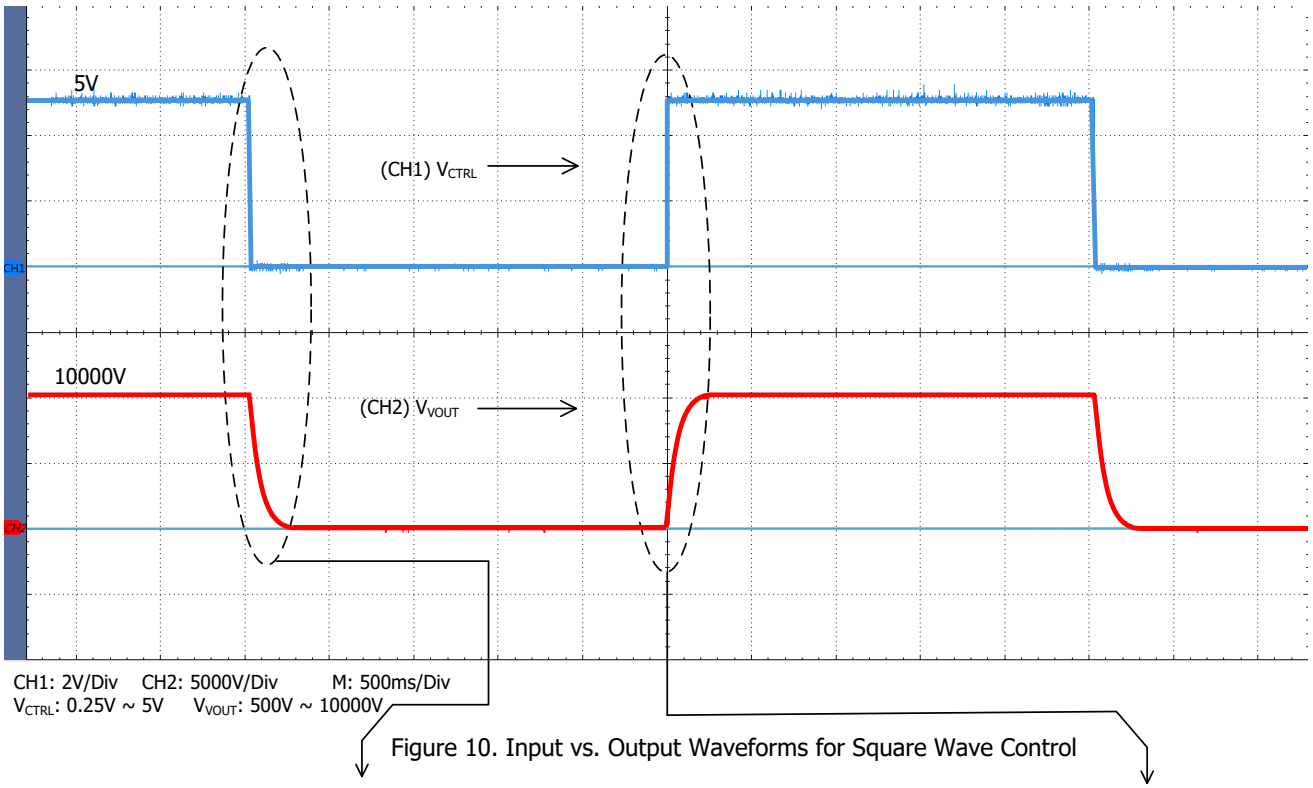

Figure 10. Input vs. Output Waveforms for Square Wave Control

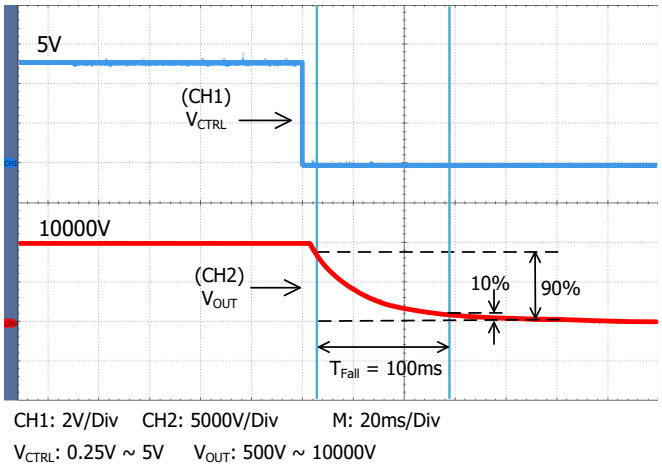

Figure 11. Falling Trail for Large Signal Response

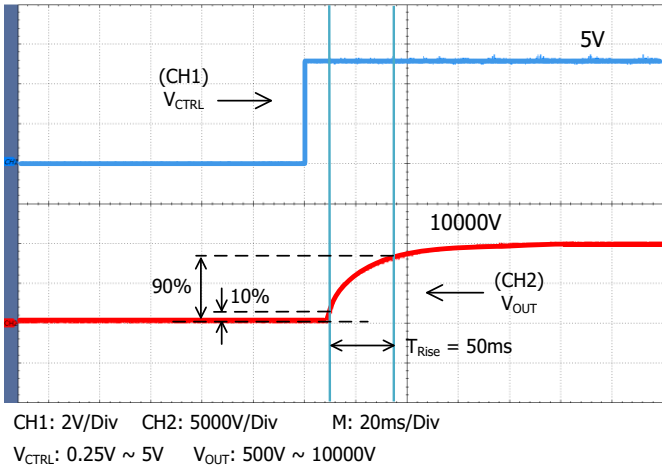

Figure 12. Rising Trail for Large Signal Response

©Copyrights 2000-2023, Analog Technologies, Inc. All Rights Reserved. Updated on 12/27/2023 1161 Ringwood Ct, #110, San Jose, CA 95131, U. S. A.

NAMING PRINCIPLE

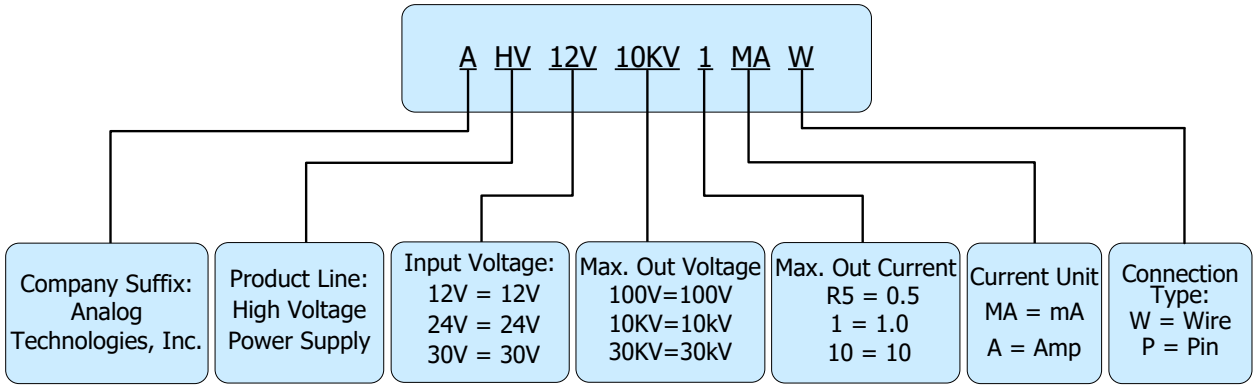

Naming Principle of AHV12V10KV1MAW

DIMENSIONS

Connecting Lead Wire Sizes and Lengths

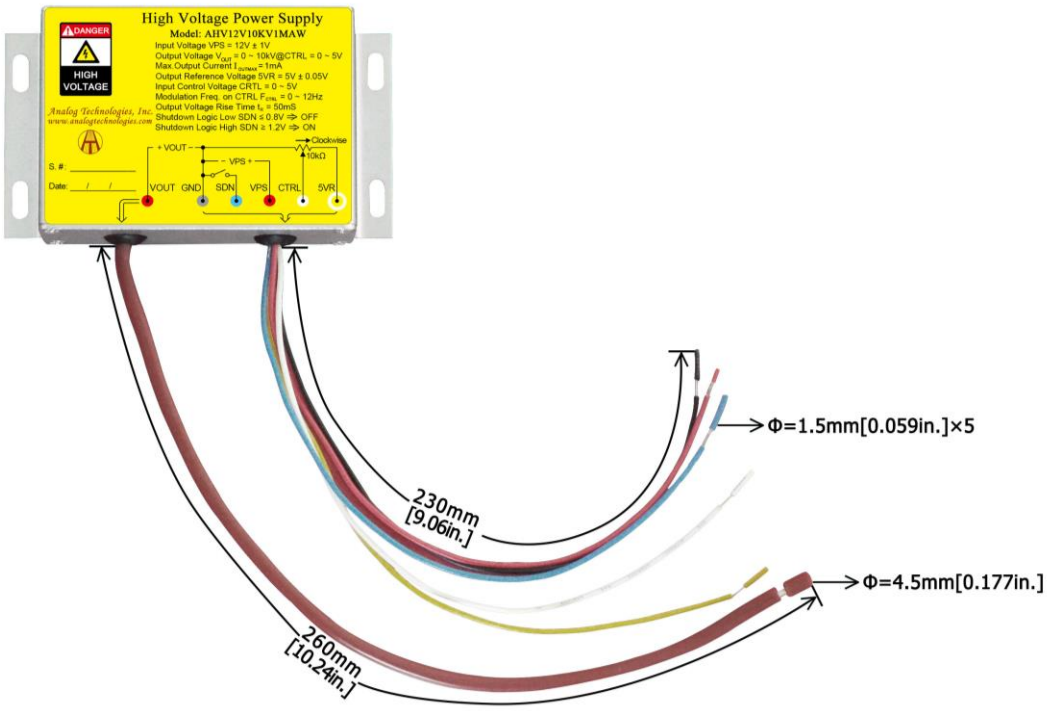

Figure 13. Connecting Lead Wires of AHV12V10KV1MAW

Lead Wires	Diameter		Length	
	mm	inch	mm	inch
Thick brown lead wire	4.5	0.177	260 ± 1	10.24 ± 0.039
Yellow, red, blue, black and white lead wires	1.5	0.059	230 ± 1	9.06 ± 0.039

©Copyrights 2000-2023, Analog Technologies, Inc. All Rights Reserved. Updated on 12/27/2023 1161 Ringwood Ct, #110, San Jose, CA 95131, U. S. A.

Outline Dimensions

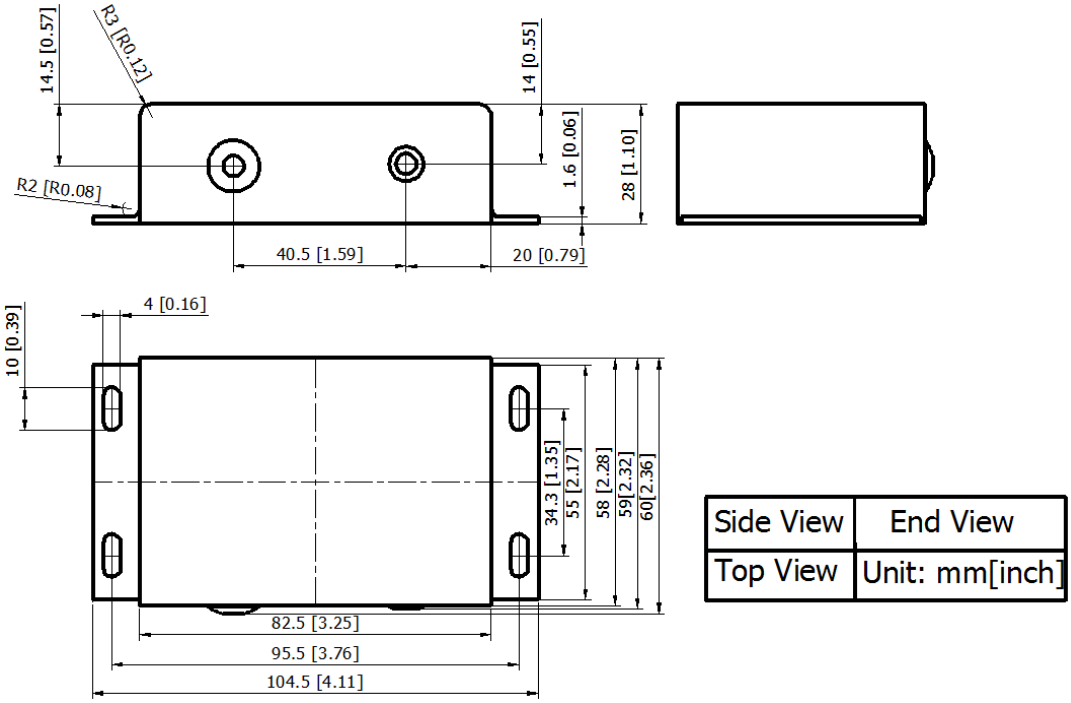

Figure 14. Outline Dimensions

ORDERING INFORMATION

Part Number	Buy Now
AHV12V10KV1MAW	

RELATED PRODUCTS

Input Voltage: 12V, Input Control Voltage: 0 to 5V, Efficiency: 70%.

Part #	Datasheet	Output Voltage (V)	Output Current (mA)	Description	Buy Now*
AHV12V500V1MAW		500	1	Positive 500V 1mA module with lead wires	
AHV12V500V2MAW		500	2	Positive 500V 2mA module with lead wires	
AHV12V500V5MAW		500	5	Positive 500V 5mA module with lead wires	
AHV12V500V10MAW		500	10	Positive 500V 10mA module with lead wires	
AHV12V500V20MAW		500	20	Positive 500V 20mA module with lead wires	
AHV12V500V50MAW		500	50	Positive 500V 50mA module with lead wires	
AHV12V1KV1MAW		1000	1	Positive 1kV 1mA module with lead wires	

©Copyrights 2000-2023, Analog Technologies, Inc. All Rights Reserved. Updated on 12/27/2023 1161 Ringwood Ct, #110, San Jose, CA 95131, U. S. A.

Part #	Datasheet	Output Voltage (V)	Output Current (mA)	Description	Buy Now*
AHV12V1KV2MAW		1000	2	Positive 1kV 2mA module with lead wires	
AHV12V1KV3MAW		1000	3	Positive 1kV 3mA module with lead wires	
AHV12V1KV5MAW		1000	5	Positive 1kV 5mA module with lead wires	
AHV12V1KV10MAW		1000	10	Positive 1kV 10mA module with lead wires	
AHV12V1KV20MAW		1000	20	Positive 1kV 20mA module with lead wires	
AHV12V1500V1MAW		1500	1	Positive 1.5kV 1mA module with lead wires	
AHV12V1500V2MAW		1500	2	Positive 1.5kV 2mA module with lead wires	
AHV12V1500V3MAW		1500	3	Positive 1.5kV 3mA module with lead wires	
AHV12V1500V5MAW		1500	5	Positive 1.5kV 5mA module with lead wires	
AHV12V1500V10MAW		1500	10	Positive 1.5kV 10mA module with lead wires	
AHV12V2KV1MAW		2000	1	Positive 2kV 1mA module with lead wires	
AHV12V2KV3MAW		2000	3	Positive 2kV 3mA module with lead wires	
AHV12V2KV5MAW		2000	5	Positive 2kV 5mA module with lead wires	
AHV12V2KV10MAW		2000	10	Positive 2kV 10mA module with lead wires	
AHV12V2500V1MAW		2500	1	Positive 2.5kV 1mA module with lead wires	
AHV12V2500V3MAW		2500	3	Positive 2.5kV 3mA module with lead wires	
AHV12V2500V5MAW		2500	5	Positive 2.5kV 5mA module with lead wires	
AHV12V3KV1MAW		3000	1	Positive 3kV 1mA module with lead wires	
AHV12V3KV2MAW		3000	2	Positive 3kV 2mA module with lead wires	
AHV12V3KV3MAW		3000	3	Positive 3kV 3mA module with lead wires	
AHV12V3KV5MAW		3000	5	Positive 3kV 5mA module with lead wires	
AHV12V3KV10MAW		3000	10	Positive 3kV 10mA module with lead wires	
AHV12V4KV1MAW		4000	1	Positive 4kV 1mA module with lead wires	
AHV12V4KV2R5MAW		4000	2.5	Positive 4kV 2.5mA module with lead wires	
AHV12V4KV5MAW		4000	5	Positive 4kV 5mA module with lead wires	
AHV12V5KV1MAW		5000	1	Positive 5kV 1mA module with lead wires	
AHV12V5KV2MAW		5000	2	Positive 5kV 2mA module with lead wires	
AHV12V5KV4MAW		5000	4	Positive 5kV 4mA module with lead wires	
AHV12V6KV1MAW		6000	1	Positive 6kV 1mA module with lead wires	
AHV12V6KV3MAW		6000	3	Positive 6kV 3mA module with lead wires	

©Copyrights 2000-2023, Analog Technologies, Inc. All Rights Reserved.

Part #	Datasheet	Output Voltage (V)	Output Current (mA)	Description	Buy Now*
AHV12V7KV1MAW		7000	1	Positive 7kV 1mA module with lead wires	
AHV12V7KV2MAW		7000	2	Positive 7kV 2mA module with lead wires	
AHV12V8KV1MAW		8000	1	Positive 8kV 1mA module with lead wires	
AHV12V8KV2R5MAW		8000	2.5	Positive 8kV 2.5mA module with lead wires	
AHV12V9KV1MAW		9000	1	Positive 9kV 1mA module with lead wires	
AHV12V10KV1MAW		10,000	1	Positive 10kV 1mA module with lead wires	
AHV12V25KV1MAW		25,000	1	Positive 30kV 0.7mA module with lead wires	
AHV12V30KVR5MAW		30,000	0.5	Positive 30kV 0.7mA module with lead wires	
AHV12VN500V1MAW		−500	1	Negative 500V 1mA module with lead wires	
AHV12VN500V2MAW		−500	2	Negative 500V 2mA module with lead wires	
AHV12VN500V5MAW		−500	5	Negative 500V 5mA module with lead wires	
AHV12VN500V10MAW		−500	10	Negative 500V 10mA module with lead wires	
AHV12VN500V20MAW		−500	20	Negative 500V 20mA module with lead wires	
AHV12VN500V50MAW		−500	50	Negative 500V 50mA module with lead wires	
AHV12VN1KV1MAW		−1000	1	Negative 1kV 1mA module with lead wires	
AHV12VN1KV2MAW		−1000	2	Negative 1kV 2mA module with lead wires	
AHV12VN1KV3MAW		−1000	3	Negative 1kV 3mA module with lead wires	
AHV12VN1KV5MAW		−1000	5	Negative 1kV 5mA module with lead wires	
AHV12VN1KV10MAW		−1000	10	Negative 1kV 10mA module with lead wires	
AHV12VN1KV20MAW		−1000	20	Negative 1kV 20mA module with lead wires	
AHV12VN1500V1MAW		−1500	1	Negative 1.5kV 1mA module with lead wires	
AHV12VN1500V2MAW		−1500	2	Negative 1.5kV 2mA module with lead wires	
AHV12VN1500V3MAW		−1500	3	Negative 1.5kV 3mA module with lead wires	
AHV12VN1500V5MAW		−1500	5	Negative 1.5kV 5mA module with lead wires	
AHV12VN1500V10MAW		−1500	10	Negative 1.5kV 10mA module with lead wires	
AHV12VN2KV1MAW		−2000	1	Negative 2kV 1mA module with lead wires	
AHV12VN2KV3MAW		−2000	3	Negative 2kV 3mA module with lead wires	
AHV12VN2KV5MAW		−2000	5	Negative 2kV 5mA module with lead wires	
AHV12VN2KV10MAW		−2000	10	Negative 2kV 10mA module with lead wires	
AHV12VN2500V1MAW		−2500	1	Negative 2.5kV 1mA module with lead wires	

©Copyrights 2000-2023, Analog Technologies, Inc. All Rights Reserved.

Part #	Datasheet	Output Voltage (V)	Output Current (mA)	Description	Buy Now*
AHV12VN2500V3MAW		−2500	3	Negative 2.5kV 3mA module with lead wires	
AHV12VN2500V5MAW		−2500	5	Negative 2.5kV 5mA module with lead wires	
AHV12VN3KV1MAW		−3000	1	Negative 3kV 1mA module with lead wires	
AHV12VN3KV2MAW		−3000	2	Negative 3kV 2mA module with lead wires	
AHV12VN3KV3MAW		−3000	3	Negative 3kV 3mA module with lead wires	
AHV12VN3KV5MAW		−3000	5	Negative 3kV 5mA module with lead wires	
AHV12VN3KV10MAW		−3000	10	Negative 3kV 10mA module with lead wires	
AHV12VN4KV1MAW		−4000	1	Negative 4kV 1mA module with lead wires	
AHV12VN4KV2R5MAW		−4000	2.5	Negative 4kV 2.5mA module with lead wires	
AHV12VN4KV5MAW		−4000	5	Negative 4kV 5mA module with lead wires	
AHV12VN5KV1MAW		−5000	1	Negative 5kV 1mA module with lead wires	
AHV12VN5KV2MAW		−5000	2	Negative 5kV 2mA module with lead wires	
AHV12VN5KV4MAW		−5000	4	Negative 5kV 4mA module with lead wires	
AHV12VN6KV1MAW		−6000	1	Negative 6kV 1mA module with lead wires	
AHV12VN6KV3MAW		−6000	3	Negative 6kV 3mA module with lead wires	
AHV12VN7KV1MAW		−7000	1	Negative 7kV 1mA module with lead wires	
AHV12VN7KV2MAW		−7000	2	Negative 7kV 2mA module with lead wires	
AHV12VN8KV1MAW		−8000	1	Negative 8kV 1mA module with lead wires	
AHV12VN8KV2R5MAW		−8000	2.5	Negative 8kV 2.5mA module with lead wires	
AHV12VN9KV1MAW		−9000	1	Negative 9kV 1mA module with lead wires	
AHV12VN10KV1MAW		−10000	1	Negative 10kV 1mA module with lead wires	
AHV12VN25KV1MAW		−25000	1	Negative 25kV 1mA module with lead wires	
AHV12VN30KVR5MAW		−30000	0.5	Negative 30kV 0.5mA module with lead wires	

*: both and are our online store icons. Our products can be ordered from either one of them with the same pricing and delivery time.

NOTICE

1. It is important to carefully read and follow the warnings, cautions, and product-specific notes provided with electronic components. These instructions are designed to ensure the safe and proper use of the component and to prevent damage to the component or surrounding equipment. Failure to follow these instructions could

©Copyrights 2000-2023, Analog Technologies, Inc. All Rights Reserved. Updated on 12/27/2023 1161 Ringwood Ct, #110, San Jose, CA 95131, U. S. A.

result in malfunction or failure of the component, damage to surrounding equipment, or even injury or harm to individuals. Always take the necessary precautions and seek professional assistance if unsure about proper use or handling of electronic components.

2. Please note that the products and specifications described in this publication are subject to change without prior notice as we continuously improve our products. Therefore, we recommend checking the product descriptions and specifications before placing an order to ensure that they are still applicable. We also reserve the right to discontinue the production and delivery of certain products, which means that not all products named in this publication may always be available.
3. This means that while ATI may provide information about the typical requirements and applications of their products, they cannot guarantee that their products will be suitable for all customer applications. It is the responsibility of the customer to evaluate whether an ATI product with the specified properties is appropriate for their particular application.
4. ATI warrants its products to perform according to specifications for one year from the date of sale, except when damaged due to excessive abuse. If a product fails to meet specifications within one year of the sale, it can be exchanged free of charge.
5. ATI reserves the right to make changes or discontinue products or services without notice. Customers are advised to obtain the latest information before placing orders.
6. All products are sold subject to terms and conditions of sale, including those pertaining to warranty, patent infringement, and limitation of liability. Customers are responsible for their applications using ATI products, and ATI assumes no liability for applications assistance or customer product design.
7. ATI does not grant any license, either express or implied, under any patent right, copyright, mask work right, or other intellectual property right of ATI.
8. ATI's publication of information regarding third-party products or services does not constitute approval, warranty, or endorsement.
9. ATI retains ownership of all rights for special technologies, techniques, and designs for its products and projects, as well as any modifications, improvements, and inventions made by ATI.
10. Despite operating the electronic modules as specified, malfunctions or failures may occur before the end of their usual service life due to the current state of technology. Therefore, it is crucial for customer applications that require a high level of operational safety, especially in accident prevention or life-saving systems where the malfunction or failure of electronic modules could pose a risk to human life or health, to ensure that suitable measures are taken. The customer should design their application or implement protective circuitry or redundancy to prevent injury or damage to third parties in the event of an electronic module malfunction or failure.

©Copyrights 2000-2023, Analog Technologies, Inc. All Rights Reserved. Updated on 12/27/2023 1161 Ringwood Ct, #110, San Jose, CA 95131, U. S. A.