BEST CONTACTS FOR YOUR SUCCESS

Telegärtner
KARL GÄRTNER GMBH

NETWORKING COMPONENTS
COAXIAL CONNECTORS
CABLE ASSEMBLIES
PRECISION TURNED PARTS
PLASTIC INJECTION MOULD PARTS
INDUSTRIAL ELECTRONICS

DataVoice
Industry
Product Catalogue Industrial Connectors

All products are shown in our
online catalogue
www.telegaertner.com

Publisher
Telegärtner
Karl Gärtner GmbH
Lerchenstr. 35
D-71144 Steinenbronn

Tel.: +49 (0) 7157/125-100
Fax: +49 (0) 7157/125-120
Email: info@telegaertner.com

Visit us online:
www.telegaertner.com

Design
team:orange GmbH, Web- und Werbeagentur
www.teamorange.de

Photos
hartmannstudios
Zuckerfabrik Digital, Fotodesign

Print
Druckerei Raisch

Edition
DataVoice Industry 2015 © Copyright by Telegärtner T00010A0011
Reproduction of even a part only by express written permission. Technical changes reserved.

Contents

2	Industrial Ethernet
11	STX Platform Concept
23	Telegärtner
31	Subsidiaries and Agents
35	Technical Information
47	Products
247	Mounting Dimensions
251	Index of Order Numbers

47	Components for the Floor Distributor - RJ45/LWL	1
61	Components for the Control Cabinet - RJ45/LWL	2
73	Components for Field Cabling - M12/RJ45/LWL	3
153	Components for Outdoor Cabling - RJ45/LWL	4
165	RJ45 Connectors IP20	5
175	FO Connectors	6
185	RJ45 Patch Cords	7
203	FO Patch Cords	8
215	M12x1 Connecting Cables	9
225	Copper Cables in Bulk	10
231	IP44 Outlets	11
237	Termination Tools	12

Data Voice – The Cabling System with PLUS POINTS

Professional Package System for Generic Building Cabling

DataVoice is a reliable professional package for designers, installers and users developed by Telegärtner to meet all generic cabling requirements in office buildings, production halls and machines. The DataVoice range includes components for copper and fiber optic cable networks and connectors for industrial applications. The office product line ranges from connection and distribution components for optical transmission systems and preassembled optical fiber sections right through to powerful passive components for copper cable transmission.

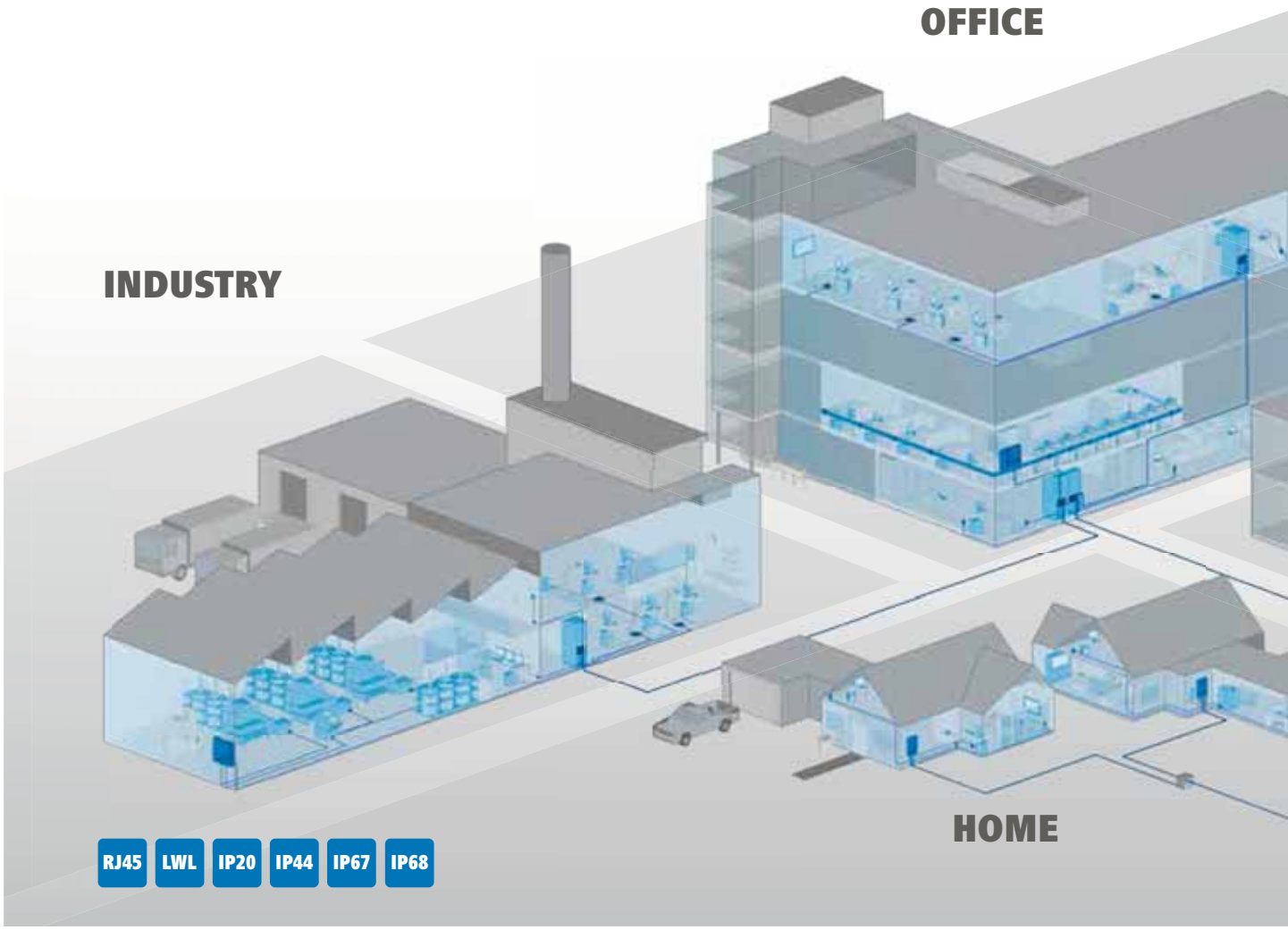

Whether your requirements be for on the factory floor or for the wiring machinery: with our extremely reliable RJ45 wiring systems, DataVoice offers everything you require for modern multi-gigabit-speed networks in the industrial environment of production areas and machinery wiring.

Our product offering is complemented with cable assemblies - for a complete generic building cabling system.

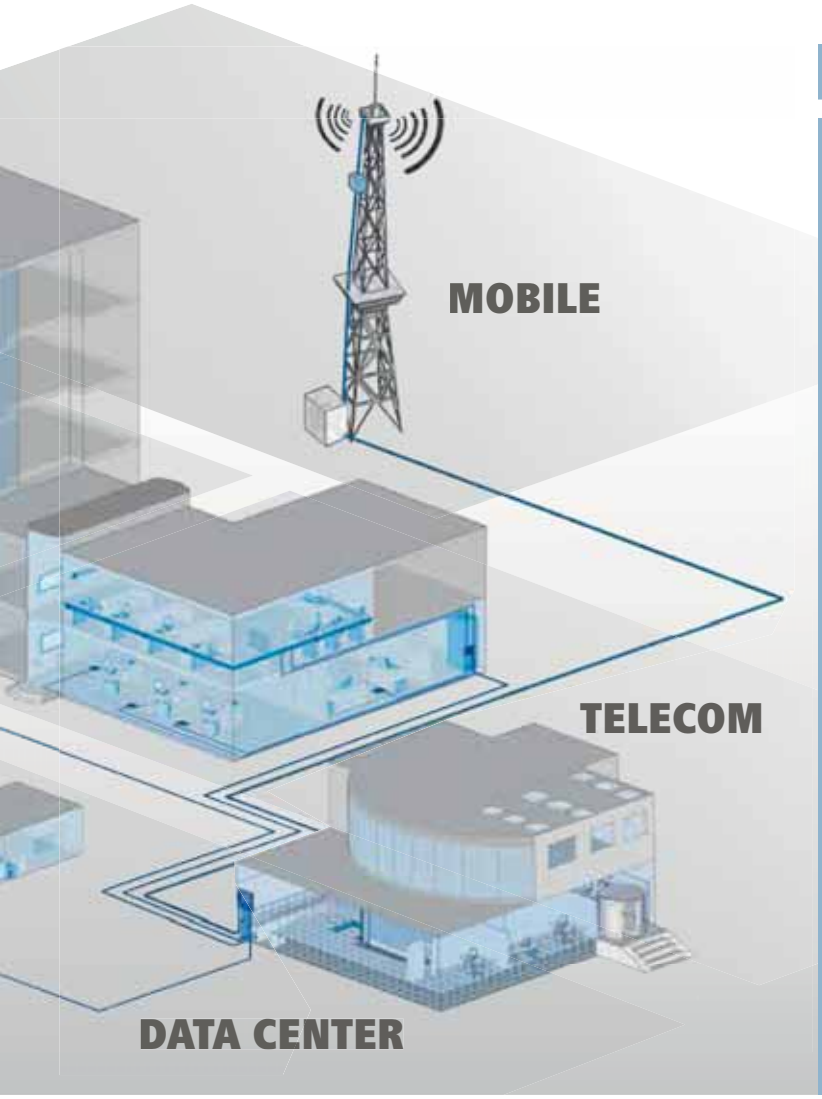

DataVoice
The Cabling System with PLUS POINTS for...

...Power
Guaranteed transmission rates of up to 100 GBit with fiber optics and 10 Gbit with copper thanks to cutting-edge technology.

...Practicality
Integrated system for office networks, production halls, machine and plant networks.

...Availablity
IP20 and IP68 protected housings for reliable connections for extreme demands in heavy-duty conditions.

...User-friendliness
Easier to install thanks to pre-assembled components and cables.

The Best Connections for Modern Industry

Modern, high-performance industrial plants, often referred to as a Smart Industry or Smart Factory, have a high degree of flexibility, even for small batch sizes, thanks to modular, open concepts and extremely high reliability levels. Intelligent, highly automated systems are expected to give companies a technological and economic advantage. This is supported by policy initiatives such as Industry 4.0 in Germany, L'industrie au futur in France and the Industrial Internet Consortium (IIC) in the US.

The huge quantities of data that are produced in such highly interconnected manufacturing processes must be transmitted over the network quickly, securely and reliably. Powerful industrial solutions must also meet the specific requirements of networked production in harsh industrial environments, while also taking future developments into account. Even outside offices, Ethernet is today a widely employed technology. While some of the same wiring components can be used for both Industrial Ethernet and office applications, the harsh manufacturing environment subjects data network components to much higher levels of strain and pressure: dust, moisture, chemicals, mechanical stresses, extreme temperatures and increased electromagnetic interference all act on the wiring and represent entirely new challenges. At the same time, manufacturing demands the highest levels of reliability and availability since a failure – no matter how brief – can result in significant financial losses. It is particularly in the industrial area that the quality and reliability of components take on crucial significance – especially with regard to data outlets and connectors. Aside from the quality of carefully matched components, protection against solid and liquid materials is highly important for industrial applications.

Telegärtner has taken on this topic and developed a future-orientated solution for Industrial Ethernet based on our connectors from the office sector which have been proven a million times over.

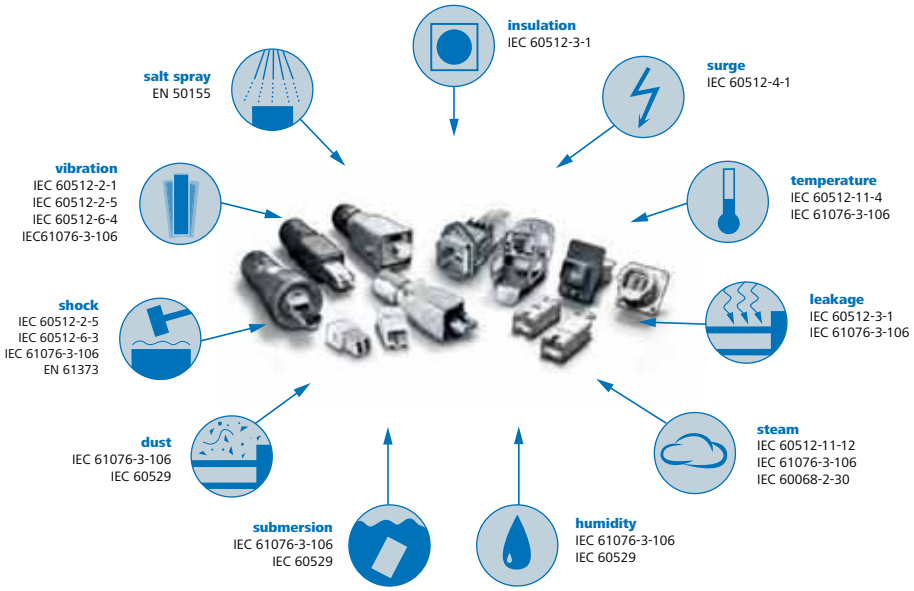

Industrial applications in particular are characterised by their wide range of demands on connectors in terms of protection classes, transmission rates, etc. So customers are often forced to obtain their connectors and components from different manufacturers and create their own mix to meet their needs. But with **DataVoice Industry from Telegärtner** this is now a thing of the past.

DataVoice Industry:
One Solution for any Requirement

The industry standard connectors and cabling components from the DataVoice Industry programme ensure reliable connections in the control cabinet, floor distributor, machine distributor or Ethernet unit. All the demands which users encounter in the industrial environment are considered.

Glass fiber and copper, flange and housing. All of the components from the DataVoice Industry programme are compliant with all internationally valid standards in contact reliability, housing stability and transmission rates in the Industrial Ethernet.

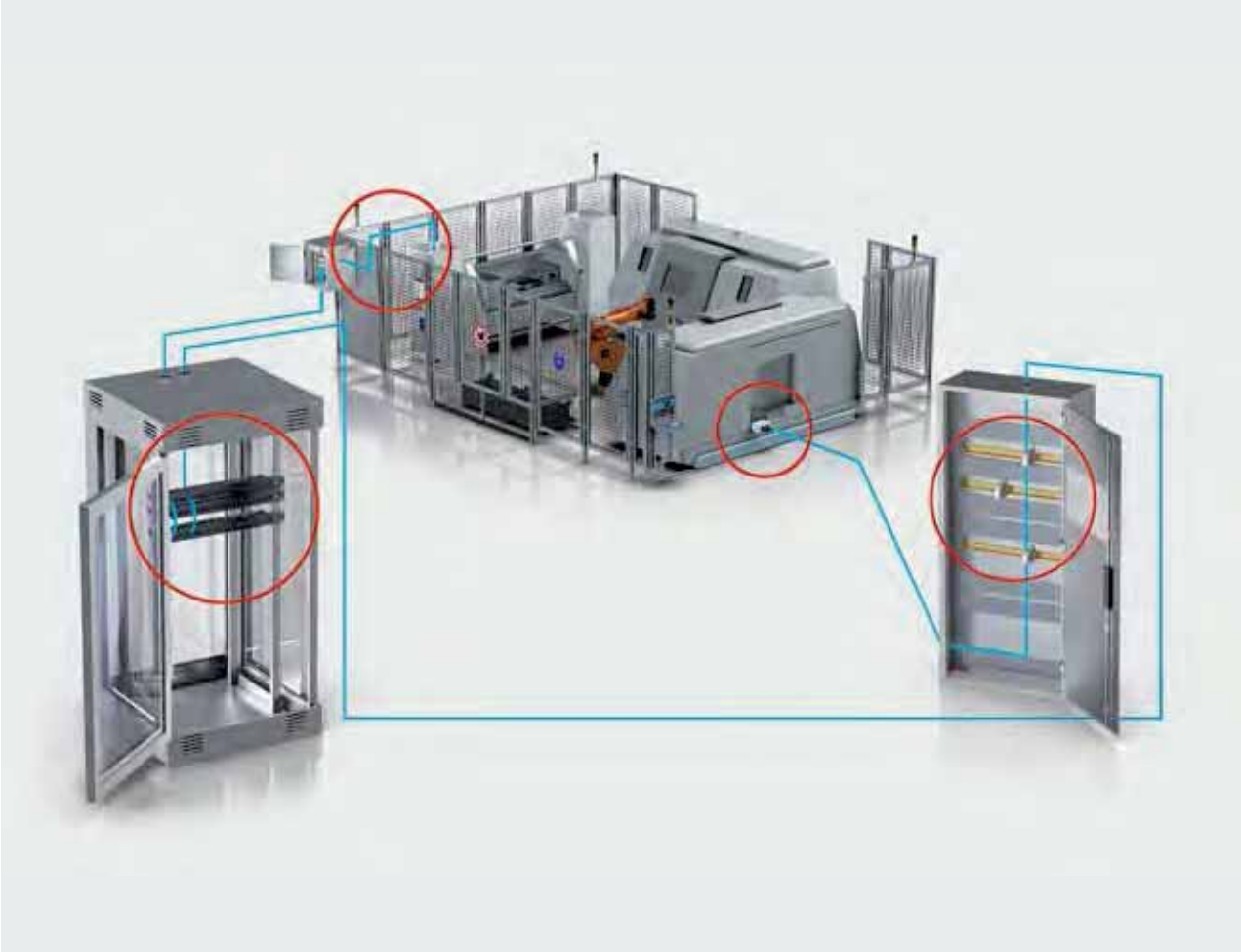

Components for the Floor Distributor

Components for Field Cabling

Outlets

Components for the Control Cabinet

High Speed – from Installation to Transmission

Demands made on fast networking, on reporting and on process control are continually increasing. With DataVoice Industry the user finally has a solution which meets every requirement. A data transfer rate from 10 MBit to 10 GBit opens up entirely new possibilities for users, both in process design as well as in logistics.

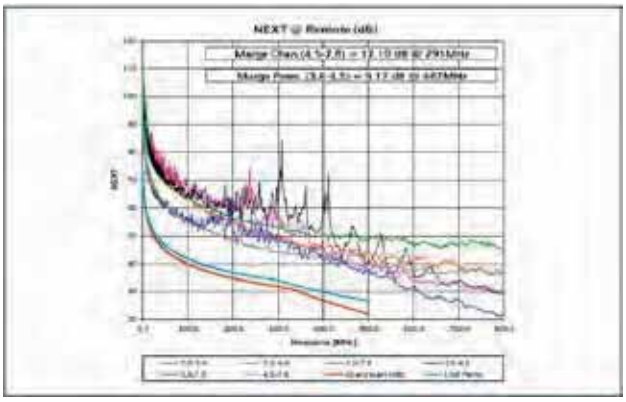

Simplest Handling

The connector generation for industrial applications has been developed to make installation quick, easy, safe and above all reliable without the need for special tools. As is the case, Telegärtner connectors are characterized by maximum flexibility when it comes to installation options. This starts with preassembled units and components which can be easily put together and, more importantly, without special tools; and carries over to the simple installation options for flanges. With Telegärtner DataVoice Industry the user has the choice between central screw-on connections for standard wall cut-outs or of four screws for exterior mounting. Both options can be easily realized with standard punch tools.

Circular Connectors M12x1 X- & D-coded for Industrial Automation

With the M12x1 connector series, Telegärtner answers the demand of industry for consistent cabling of industrial communication networks in accordance to IEC 61918 which prescribe M12x1 circular connectors in 4 and 8-pole versions as a plug interface.

As a 4-pole, D-coded connector, you can use it for data rates up to 100 Mbit/s for installations in the PROFINET environment. The 8-pole X-coded version enables data rates up to 10 Gbit/s and in addition a power supply to connected equipment. This allows applications such as security or video surveillance (CCTV), passenger information systems (PIS), production systems or production monitoring with high-resolution cameras to be implemented. The extremely robust M12 can be mounted on site without special tools. Its vibration-proof screw connection enables strain relief and sealing in one. It also features very good shield contacting and covers a wide range of wire diameters (0.9 – 1.6 mm) and cable diameters (5 – 9 mm).

Telegärtner STX M12 Cabling System

Telegärtner offers M12x1 D- and X-coded connectors for the installation of industrial communication networks, which are suitable for use with solid and stranded wires and include a 360° shielding contact.

Another part of the STX M12 cabling system are bulkhead sockets for PCBs with housings for front or back mounting. For the device connection between machine/terminating equipment or from machine/terminating equipment to the control cabinet, Telegärtner offers pre-assembled connecting cables with SF/UTP 2x2xAWG22/7 PUR according to PROFINET specification for the D-coded M12x1. The connecting cables with X-coded M12x1 feature an S/FTP 4x2xAWG26/7 PUR structure and increased temperature range of -40° to 85°C.

The M12x1 X-coded connector can be used worldwide in industrial Ethernet systems in accordance with ODVA (Rockwell Automation), PROFINET (Siemens) and CC-Link (Mitsubishi Electric), EtherCAT (Beckhoff Automation) applications.

TOC Outdoor Connectors

TOC stands for Telecommunications Outdoor Connectors and offers cabling professionals the reliability and flexibility they need for toughest applications. They are used for data- and telecommunications in mobile radio, process-, utility- and traffic automation, or security applications but also in the harsh environment of machine and plant engineering.

The TOC series is available in nickel-plated brass for RJ45 Cat.6_A, FO LC Duplex and MPO/MTP® connectors. Compliant with the specifications of protection class IP68 and due to its excellent material properties, the TOC series can be installed even in harsh conditions within a temperature range from -40 °C to 85 °C.

To lock, relief of strain and seal the connection, one turning movement is necessary and no further procedures are required. Customers benefit: fast, error free and easy installation, high transmission reliability and resilience and more flexibility in the network design.

TOC Series RJ45 and LC Duplex

The TOC series RJ45 coming with the field-assembly MFP8 Cat.6_A and AMJ-S Module Cat.6_A is available as a set. They can be attached to solid and stranded conductor cables with cable outer diameter max. 9.5 mm on site without the need for any special tools. For line extensions, the TOC Coupler can be easily integrated into the cabling structure.

The TOC Series with LC Duplex resp. MPO/MTP® plugs captivates due to its flexibility and ease of installation. The TOC Series with LC Duplex resp. MPO/MTP® captivates due to its flexibility and ease installation. Customers can work with pre-terminated cables feed into TOC plug.
By means of the elongated release latch the plugs can be mated & unmated into SFP transceivers or adaptors effortlessly even in confined installation environments. In addition, the several installation positions of SFP transceivers no longer form a problem. The TOC plug housing covers cable diameters up to 9.5 mm. For line extensions, the TOC Coupler can be easily integrated into the cabling structure.

Telegärtner STX:
Connector Platform for Industrial Ethernet

Whether it involves factory, machinery or facility cabling, Variant 1, Variant 4, Variant 5 and Variant 14 industrial connectors from the STX platform together with Variant 6 connectors from Telegärtner offer you firstclass, standards-compliant Industrial Ethernet solutions. One reason for this is their resistance to the stresses encountered in industrial environments. A second reason is their modularity: there's nothing like STX where you can equip protective housings with such an unlimited variety of plug or bulkhead inserts.

An interface which meets all the demands of industrial connection technology

An interface forms the foundation of the STX platform concept, taking all requirements, possibilities and eventualities in the field of industrial connection technology into consideration: fiber optics and copper, bulkhead and housing.

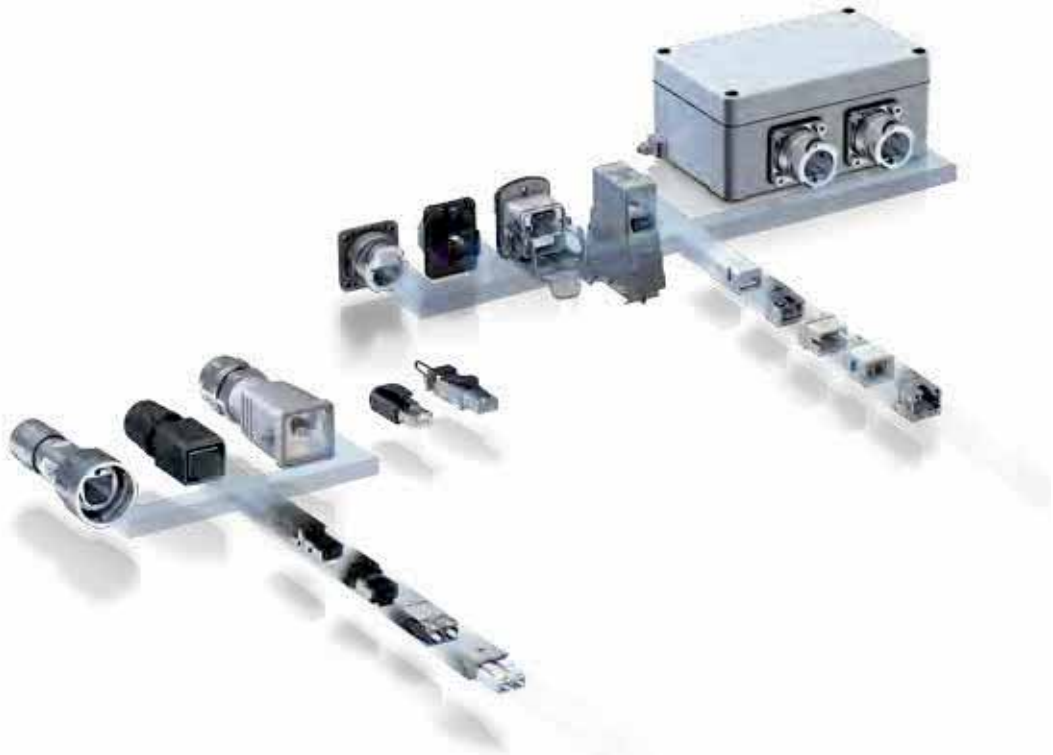

The STX platform concept permits inserts of uniform dimensions to be used in different housings. For modern networks operating at gigabit rates nothing is simpler or more reliable. **Be it for factory or machinery and equipment wiring – you'll always be on the safe side with STX Ethernet connectors.**

No Limits on Combination: The Modular STX Connector System

Advantage thanks to maximum modularity. The new Telegärtner STX Ethernet connectors, available in Variant 1, Variant 4, Variant 5 and Variant 14 and all with ***STEADY**TEC*® technology, offer standards-compliant solutions which can be flexibly combined with one another – without troublesome adjustments since the freely selectable inserts can be used in all IP67 protective housings. This provides greater freedom in component selection and in component application. Aside from the RJ45 inserts, fibre optic connectors for Plastic Optical Fibers (POF), Plastic Clad Fibers (PCF) and Glass Optical Fibers (GOF) in 9 µm, 50 µm and 62.5 µm can all be integrated. Beyond this, a unique selection of versions in either plastic or metal is available. Additionally, all connectors are standardized in accordance with EN 50173-1, ISO/IEC 24702, IEC 61918, IEC 61784-5 as well as IEC 61076-3-106 and

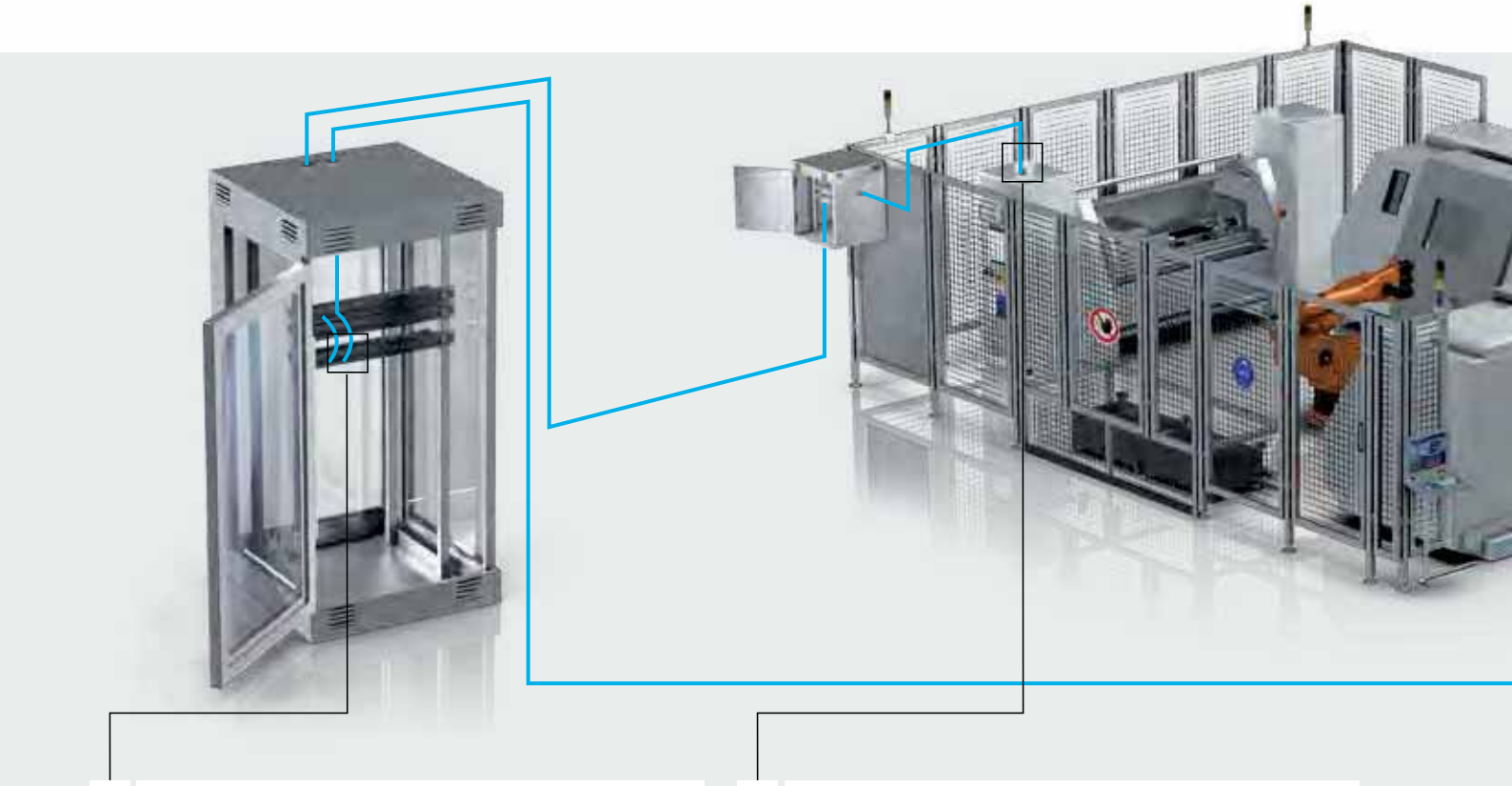

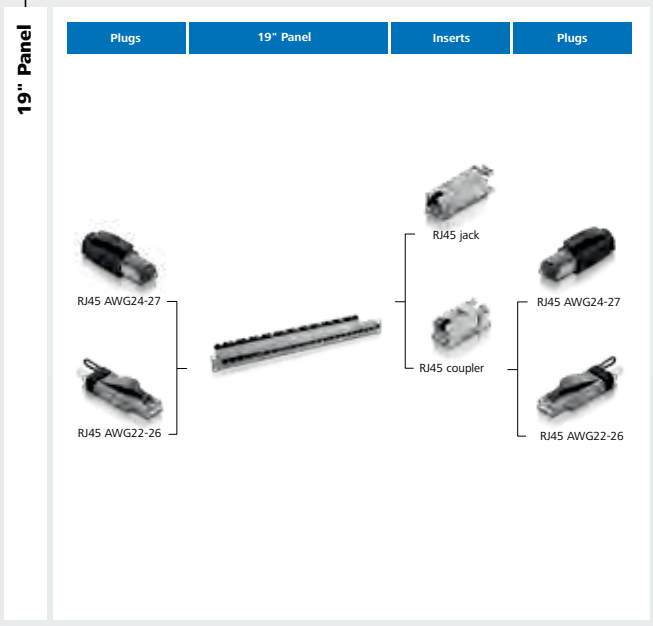

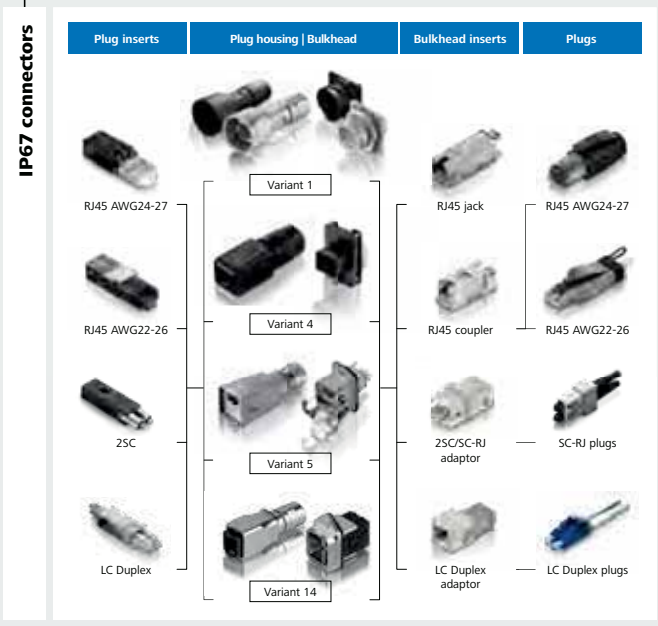

IEC 61076-3-117. In summary: Nothing is simpler and more reliable for modern, multi-gigabit-speed networks; whether for factory, machine and equipment wiring, or whether for reliable connections between shop, machine and equipment networks.
Profit from the maximum flexibility offered by STX. Thanks to its wide range, the product line guarantees you crucial advantages during planning, assembly and ongoing operations for numerous applications. The user has the choice and thus always obtains the product which best suits the given application. Every version – whether with plastic or metal housing – is designed for IP67 protection.

RELIABLE.
SIMPLE.
FAST.
SOLUTIONS-ORIENTED.

Telegärtner STX: mit „*STEADY*TEC® Reliable Technology“

In order to fully prepared Industrial Ethernet for the special challenges presented by this harsh environment, Telegärtner – working together with leading firms from the field – has developed the so-called “***STEADY***TEC®” technology. ***STEADY***TEC® stands for a simple, reliable connecting technique for harsh environments.

Any product carrying the “***STEADY***TEC® Reliable Technology” logo offers the user full assurance that the connector in question complies with all international standards for Industrial Ethernet: 100 %. The stringent demands with respect to quality and system continuity are reflected across the entire product range. Planners, installers and operators are pleased with this combination of reliability, compliance with standards, flexibility, variety and modularity. Only products which can meet these criteria may wear the “***STEADY***TEC® Reliable Technology” logo.

IP67 outlets

IP20 mounting rail outlet

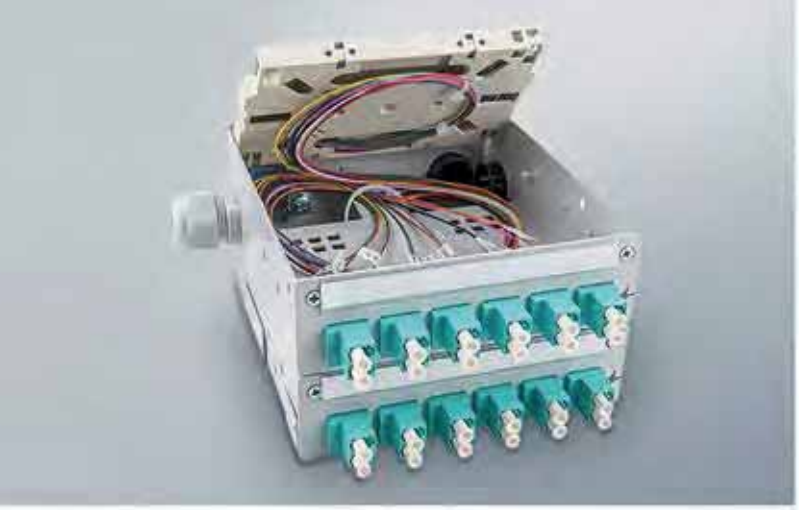

IP67

Telegärtner DataVoice Industry
Highlights

Telegärtner has been setting new standards in connection technology for decades. Over the years Telegärtner has developed numerous products for structured building cabling with which planners, installers and users can go about their daily tasks easier, more efficiently and with the promise of greater success.

Field-assembly RJ45 Plug MFP8-4x90 Cat.6_A , angled
The MFP8-4x90 Cat.6_A is the logical extension of the field-assemblable RJ45 connector series. The advantages of the conventional MFP8 Cat.6_A such as easy and fast assembly on all standard types of cable and for all networks up to 10 Gigabit Ethernet, have been extended by a variable 90° cable outlet. This offers unprecedented flexibility and saves time and money on installation, repairs and maintenance – in office buildings, in data centers, in industry or for home cabling.

Field-assembly RJ45 Plug MFP8 IE Cat.6_A
The newest member of the MFP8 family is characterized by two significant innovations. Besides the new designed and shapely full metal housing, the MFP8 IE features in particular an innovative cable gland for cable diameters up to 10 mm. The hinged parts of the shield housing are attached captive at the plug housing and allow a fast and easy assembly of industrial cables on site. Thus the MFP8 IE is the ideal solution for installations and repairing of modern industrial networks.

STX Mounting Rail Distributor for up to 24 optical fibres
The range of STX Mounting Rail Distributors has been extended by a new version for up to 24 optical fibers. They can be ordered pre-loaded (“ready to splice”) and come with pre-installed adaptors ST Duplex, SC Duplex or LC Duplex and coloured, stripped pigtails.

Field-assembly Connectors STX M12x1 X- and D-coded
The cabling of industrial communication networks in accordance with IEC 61918 prescribes the M12x1 circular connectors in 4 and 8-pole versions as a plug interface. For this, Telegärtner offers M12x1 D- and X-coded connectors in accordance with IEC 61076-2-101 and IEC 61076-2-109, bulkhead sockets for PCBs with housings for front and back mounting and pre-assembled connecting cables for the device connection between machines/terminating equipment or from machine/terminating equipment into the control cabinet.

Connection Module VM-Pro 8-8 Class F_A (1000 MHz) IP67
The mechanical stability, the insulated structure and the protection against external influences allows versatile use of the VM-Pro 8-8 Class F_A (1000 MHz) IP67 for laying and repairing cables in building, residential and industrial building cabling. Its compact design enables a convenient cable connection even in very confined spaces. Assembly requires no special tools and can be done in just a few easy steps.

You will find other Telegärtner highlights from the DataVoice range on our Internet Web site under
www.telegaertner.com/datavoice

Telegärtner
DataVoice Office
Online catalogue
DataVoice Office

Telegärtner Online

Visit us online!

Get an insight into our extensive product spectrum and learn more about us. Thanks to our target group-orientated structuring you will quickly and easily find informative contents on different topics such as components for home wiring, for industrial applications or for wiring data centers.

Our online catalogue keeps you constantly informed on our complete product portfolio – always up-to-date. By using open navigation structure and integrated full text retrieval you are sure to find the products you are looking for quickly. Every product group is described in detail with corresponding technical parameters and special features. You can obtain extensive information on every product in picture and text, as well as you can download important information such as assembly instructions as PDF-file onto your computer.

www.telegaertner.com

Telegärtner
Downloads & Tools
Configurators and Tools

Telegärtner Configurators

for the online planning of RF cables, Cabling Components & Networks

You want to assemble RF cables with coaxial connectors individually and add cable cover, labelling and cable length according to your requirements? Or do you want to configure cables and connectors or an FO patch panel according to your requirements and send an inquiry immediately online? Or do you want to be able to schedule the structured cabling of a network and search for perfectly coordinated components such as modules/keystones, data outlets, patch panels, mini distributors or patch cords and installation cables, which you can put together according to your individual wishes and needs? Then our configurators are just what you need.

TICNET-Configurator

For the optimum online planning of individual fiber optic patch panels and wall distributors, ready-to-install fiber optic links, fiber optic patch cords and pigtails, RJ45 patch cords in protection class IP20, IP67 and IP68.

Advantages at a glance:

- 6 different configurators for a wide and diverse range of individual product combinations
- Detailed product information with images and technical data
- Clear breakdown of all relevant information incl. gross list prices
- Saving of your configurations for quick subsequent orders
- View your saved configurations at any time by entering security code

www.telegaertner.com/go/ticnet

Network-Configurator

For fast and easy online planning of a structured network incl. modules/keystones, outlets, patch panels, mini distributors, patch cords and installation cable.

Advantages at a glance:

- Two different view options (floor viewing for planning across several floors as well as room view for a simple planning of your individual network) for a easy and fast configuration
- Detailed parts lists with technical data and gross list prices in Excel or PDF format for downloading
- View saved configurations and edit at any time by entering security code

www.telegaertner.com/go/network-config

COAX-Configurator

For the optimum online planning of individually assembled RF cables incl. coaxial connectors, cable cover, labelling and cable length.

Advantages at a glance:

- Detailed display of all products which you need for your personal configuration – with PDF data sheets for downloading
- Illustration on the connectors by photo and technical drawings
- All configuration parameters at a glance: for a simple and clear cable configuration in a few steps
- Your individual configuration as a clear specification in PDF format: for downloading and printing

www.telegaertner.com/go/coaxconfig

The Right Solution for Every Requirement

The Telegärtner Scope of Supply

All products in our portfolio were developed to transfer data and signals safely and reliably. Our extensive catalogue programme covers a wide range of applications. But since every application makes its own demands on the product, it is sometimes necessary to adapt individual products or modules. Telegärtner offers numerous product-accompanying and supplementary services especially for this – both for connecting components, network solutions, fiber optic products and RF connectors. Use our TICNET, Network and Coax online configurators to configure cables, connectors, fiber optic patch panels, complete structured networks or coaxial connectors to meet your requirements and request them simply online.

Benefit from our know-how from a number of customised products such as data outlets or distributors or from our OEM competence – for uncomplicated and structured wiring of halls, machines or plants or secure transmission of RF signals.

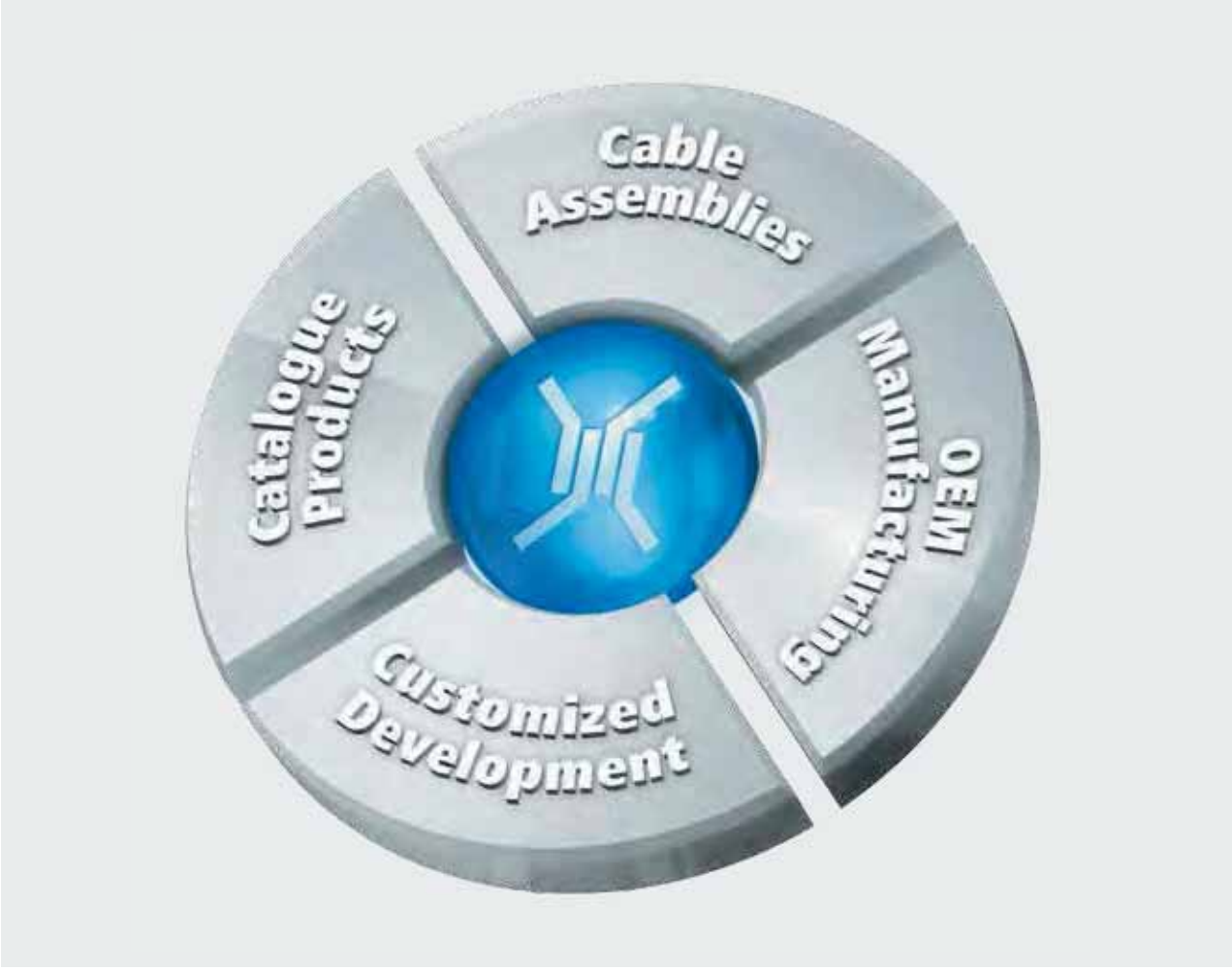

Catalogue Products

Telegärtner offers an extensive range of high quality connecting components for data and telecommunications technology. In addition to high performance passive components for transmission via copper cables we also offer connection and distributor components for fiber optic technology. This is all rounded off by cable pre-assembly – for comprehensive, structured building cabling. In addition to network components, you will also find a wide standard range of RF connectors in our portfolio for fast availability. With added Telegärtner quality and reliability in every product.

Customised Development

In order to offer our customers uncomplicated and structured cabling of halls, machines or plants, we adapt individual products or modules such as data outlets or distributors to meet your individual requirements. Our development competence is demonstrated particularly in the coax field where we convince with a CAD database and more than 15,000 single parts and many thousands of implemented special developments – this individual customisation is invaluable especially for small and medium-sized series.

OEM Manufacturing

Produced according to your technical and design specifications both as a built-in unit or a complete product: The tailor-made Telegärtner OEM products are used for data and signal transfer in many different branches. Thanks to short development times, fast and flexible sample production including housing construction as well as reliable order handling, Telegärtner is constantly able to supply customers in different telecommunications sectors with the right DataVoice or Coax solution: in the form of an OEM device which meets all requirements and helps them to successfully serve the market.

Cable Assemblies

Do you want to configure cables and connectors or an FO patch panel according to your requirements and send an inquiry immediately online? Then the TICNET Configurator from Telegärtner is just the right tool for you. Several configurators are available for different individual requirements. Each product that you configure is shown to you in detail – incl. illustrations and technical information. You can save your configurations and call them up again later as required. In addition to the TICNET Configurator we also offer you the Coax Configurator: With this you can also configure coaxial connectors with cables online.

Telegärtner

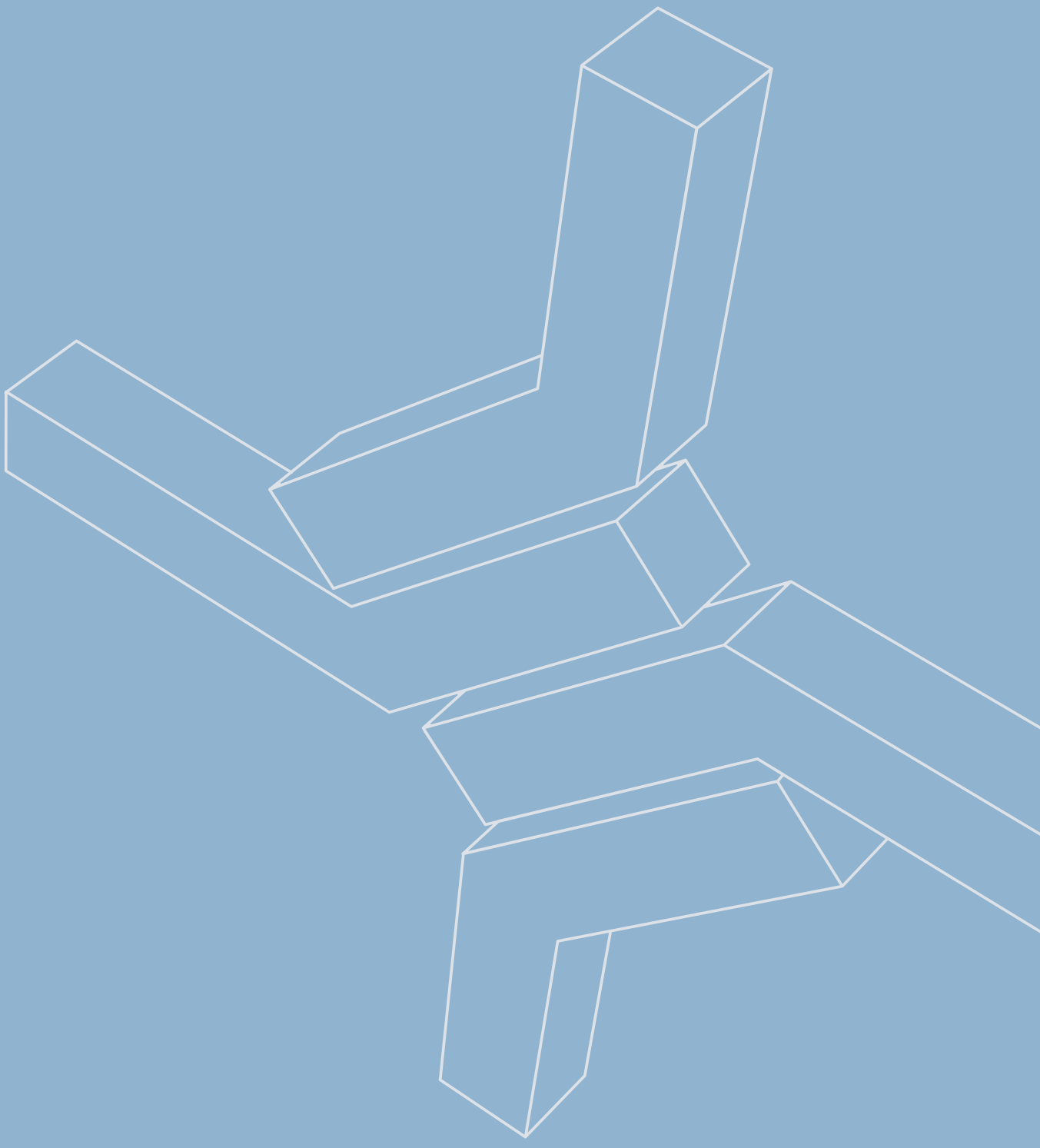

Telegärtner

Telegärtner

Best Contacts for your Success

Telegärtner Karl Gärtner GmbH in Steinenbronn near Stuttgart is an internationally operative full provider for professional solutions in connection technology. The traditional company produces and sells RF coaxial connectors, networking solutions for structured building cabling for office and industrial environment.

In its more than 70 year history Telegärtner Karl Gärtner GmbH has evolved from a spare parts supplier for telephone installations for American barracks to one of the top addresses for coaxial connectors, network components and cable assembly. But this remarkable development was only possible because the demands of the traditional company have not changed in all these years. Telegärtner does not just want to produce good quality but to give customers excellent solutions with which they can work successfully.

Telegärtner meets high tech demands and satisfies conventional customer needs with great commitment. Regardless of whether a large or small series is required, Telegärtner is the ideal standard supplier and development partner for customers who demand and expect the best contacts for their success.

Detailed information about Telegärtner as well as our online catalogue you can find at:
www.telegaertner.com

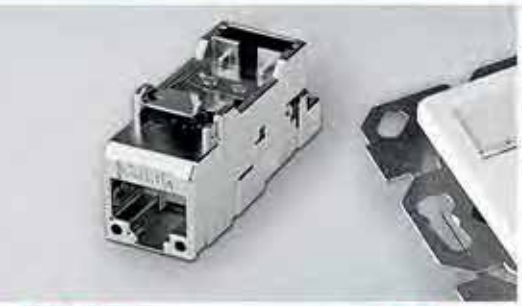

Cat.6A
1
2
3
4
5
6
7
8
9
Telegärtner
1
2
3
4
5
6

Telegärtner Products

Utilize the Contacts within the Telegärtner Group

The Telegärtner group offers a complete and varied network of services. If you are already working successfully with Telegärtner in one of the following product areas, you can also profit from our outstanding performance in other areas – and exploit the resulting synergies. Please contact your authorised Telegärtner sales partner to receive additional catalogues and information material!

Coaxial Connectors
Whether you require coaxial connectors for high power transfer in the area of transmission, subminiature connectors for dense packaging, or precision connectors for laboratory equipment, we can meet your every need with our extensive line of standard products – as well as, naturally, connectors specially designed to meet individual customer specifications.

Networking Components
We offer you an extensive line of connection components for telecommunications and data transmission technology. On the one hand, high performance, active and passive components for transmission via copper cables and, on the other, connection and distribution components for fiber optics.

Cable Assembly
On request, we can provide you ready-to-use coaxial and other cables which we assemble ourselves. The advantage: cable specific connectors together with reliable, low-loss RF cables. In addition to conventional coax cables, we also pre-assemble semi-rigid, semi-flex, and corrugated cables as well as RJ45 and FO cables with protection class from IP 20 to 68.

Precision Turned Parts
Telegärtner Gerätebau manufactures complex precision turned parts and components in a diameter range of Ø 8 mm to Ø 65 mm made of brass, aluminium, steel and stainless steel. In cooperation with reliable partners we offer our customers all common finishing technologies (e. g. grinding and honing, galvanic and chemical coatings, deburring and heat treatment).

Plastic Injection Mould Parts
Telegärtner Kunststofftechnik brings its comprehensive know-how to bear on complex material combinations, from product development right up to series production, from multi-component injection moulding, across in-mould and MID 3D techniques, to automation and clean room technologies.

Industrial Electronics
Telegärtner Elektronik offers active/passive sub-assemblies forindustrial electronics, telephone and entryway speaker systems as well as emergency call systems. We offer everything from development (hardware and software) based on customer specifications, to technical consultation and prototype testing and acceptance by the TÜV (the leading technical approval institution in Germany), up to production in small and large series. Device construction covers everyaspect from PCB population and sub-assembly mounting, up to complete device manufacturing.

CERTIFICATE

DEKRA

Telegärtner
KARL GÄRTNER GMBH

ISO 9001:2008

DEKRA Certification GmbH hereby certifies that the company

Telegärtner Karl Gärtner GmbH

Scope of certification:
Development, production and sales of connection devices for high-frequency engineering and telecommunication

Certified location:
D-71144 Steinenbronn, Lerchenstraße 35

Telegärtner Quality
Connectors for Highest Demands

Policy on Quality
Because we always want to offer you, our customers, the best contacts, our quality expectations go far beyond standard. Accordingly, we view ISO as merely a standard for quality – Telegärtner quality, on the other hand, is something we improve daily. It is with this in mind that we have instituted a quality assurance programme according to DIN EN ISO 9001:2008 und DIN EN ISO 14001:2004: from goods received, through manufacturing up to shipping and maintenance. A CAQ programme, the most up-to-date measuring and testing tools, optical and 3D measuring systems, quality consciousness by our employees and the continual optimisation of the Total Quality Management: That´s what makes Telegärtner so unique.

Development and Manufacturing
The products developed with CAD are optimized in our labs with the aid of network analysers and intermodulation test benches. A well-balanced ratio between fully automated, semi-automated and manual manufacturing processes guarantees a high level of flexibility. In addition to the wide range of standard types listed in this catalogue, a multitude of special designs are also available. Additional products can be – and are – developed and manufactured based on your specifications.

Delivery Service
The Telegärtner brand stands for more than 70 years of pronounced customer orientation. Starting in the manufacturing, where we consider your requests up to the delivery, where we do more than necessary, to afford you the best contacts in the right place at the right time. A fully automated state-of-the-art warehouse with more than 28,000 containers assures, that you don´t have to wait long for their goods. 24-hour delivery time ex warehouse: This is the figure against which you can measure the performance of our logistic department.

Responsibility for Society and the Environment
Environmental protection at Telegärtner is not only considered in the development and manufacturing of products, but also in all entrepreneurial activities in the daily routine. The sparing use of resources has top priority. Our catalogues are printed CO_2 neutral, business and copying papers are FSC certified and 15% of our annual demand of electricity is produced by our own solar plant on the roof top of our company building.

Subsidiaries and Agents

The Telegärtner Group

Worldwide there for you

The head office of the Telegärtner Group is located in Steinenbronn, Germany. It lies in the heart of the Stuttgart industrial region from where world-renowned companies such as Mercedes Benz, Porsche, or Bosch began their global triumphal march.

Telegärtner Germany manufactures networking components and coaxial connectors for structured cabling as well as plastic injection moulded parts in Steinenbronn. Precision turned parts and components for fiber optic technology are produced in Höckendorf (near Dresden). Finally, active and passive electronic sub-assemblies are developed and manufactured in Crailsheim. Beyond this, we also have several overseas subsidiaries.

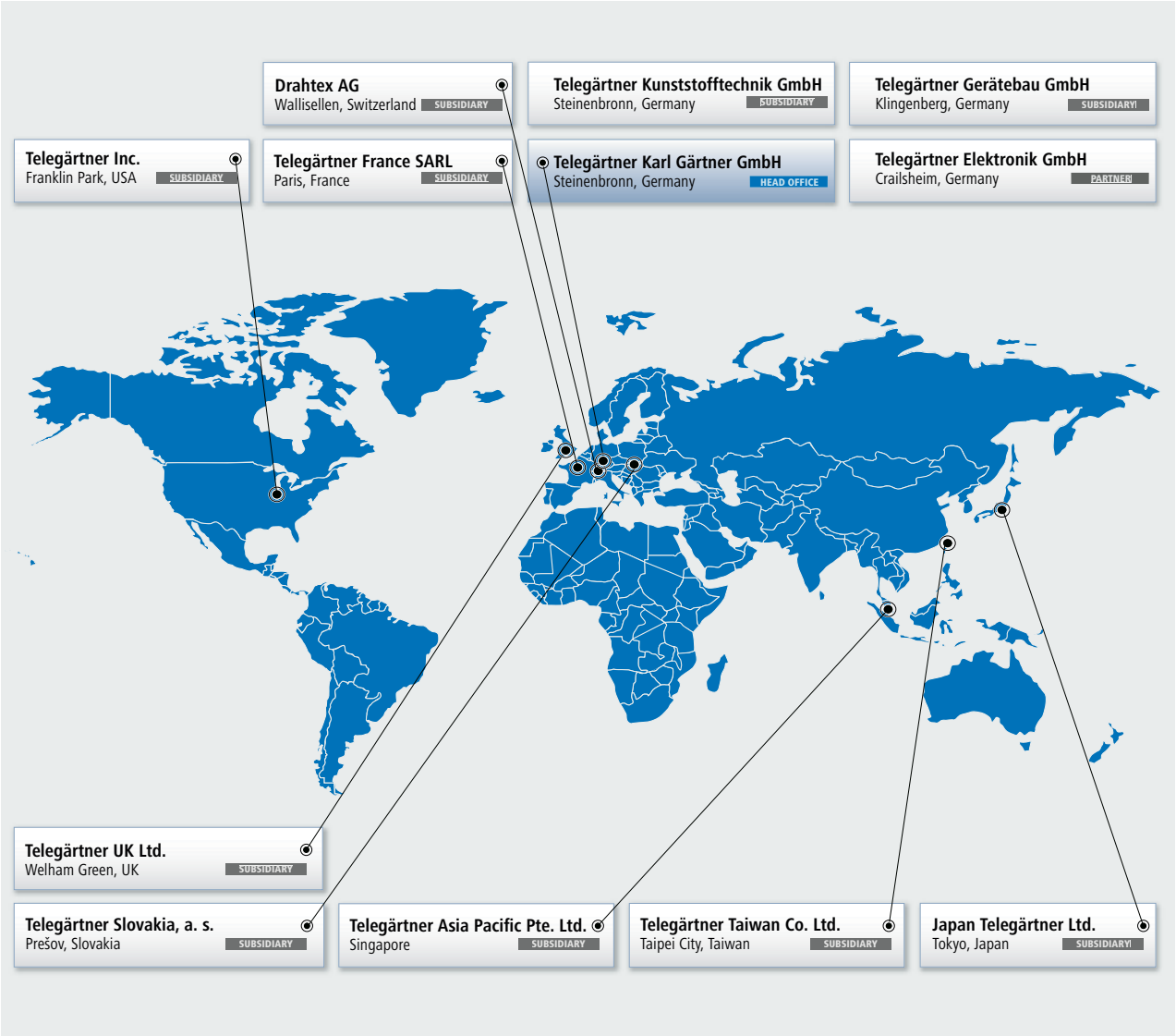

Telegärtner Head Office and Worldwide Subsidiaries

Germany

Telegärtner Karl Gärtner GmbH
Steinenbronn, Germany

Telegärtner Karl Gärtner GmbH
Lerchenstraße 35
D-71144 Steinenbronn
Germany

Tel: +49 7157 125-100
Fax: +49 7157 125-125
info@telegaertner.com
www.telegaertner.com
Head Office

Germany

Telegärtner Kunststofftechnik GmbH
Steinenbronn, Germany

Telegärtner Kunststofftechnik GmbH
Gewerbestraße 4-6
D-71144 Steinenbronn
Germany

Tel: +49 7157 52 501-0
Fax: +49 7157 72 512
kunststofftechnik@telegaertner.com
www.telegaertner.com
Subsidiary

Germany

Telegärtner Elektronik GmbH
Crailsheim, Germany

Telegärtner Elektronik GmbH
Hofäckerstraße 18
D-74564 Crailsheim
Germany

Tel: +49 7951 488-0
Fax: +49 7951 488-80
info@telegaertner-elektronik.de
www.telegaertner-elektronik.de
Partner

Germany

Telegärtner Gerätebau GmbH
Klingenberg, Germany

Telegärtner Gerätebau GmbH
Frauenstraße 1
D-01774 Klingenberg
Germany

Tel: +49 35055 682-0
Fax: +49 35055 612-24
geraetebau@telegaertner.com
www.telegaertner.com
Subsidiary

Japan

Japan Telegärtner Ltd.
Tokyo, Japan

Japan Telegärtner Ltd.
Shibuya-YT Bldg.02-5F
21-3 Shinsen-Cho, Shibuya-Ku
J-Tokyo 150-0045, Japan

Tel: +81 3 57 90 76-21
Fax: +81 3 57 90 76-22
info@telegaertner.co.jp
www.telegaertner.co.jp
Subsidiary

USA

Telegärtner Inc.
Franklin Park, USA

Telegärtner Inc.
411 Domenic Court
Franklin Park, IL 60131
USA

Tel: +1 630 616-7600
Fax: +1 630 616-8322
sales@telegartner.com
www.telegaertner.com
Subsidiary

France

Telegärtner France SARL
Paris, France

Telegärtner France SARL
Immeuble Carré Haussmann 1-4
4, allée du trait d'union
77127 Lieusaint, France

Tel: +33 1 82 33 01-10

info.france@telegaertner.com
www.telegaertner.com
Subsidiary

Taiwan

Telegärtner Taiwan Co., Ltd.
New Taipei City, Taiwan

Telegärtner Taiwan Co., Ltd.
6F, No. 317, Sec. 2,
Wenhua Rd., Banqiao Dist.,
New Taipei City, 22046, Taiwan, R.O.C.

Tel: +886 2 2252-7620
Fax: +886 2 2258-9099
info.taiwan@telegaertner.com.tw
www.telegaertner.com.tw
Subsidiary

Singapore

Telegärtner Asia Pacific Pte. Ltd.
Singapore

Telegärtner Asia Pacific Pte. Ltd.
102E Pasir Panjang Road
#03-04 Citilink Warehouse Complex
Singapore 118529

Tel: +65 6272 6666
Fax: +65 6272 8009
daniel.gaertner@telegaertner.com
www.telegaertner.com
Subsidiary

Switzerland

Drahtex AG
Zürich, Switzerland

Drahtex AG
Hertistraße 25
8304 Wallisellen
Switzerland

Tel: +41 44 878-20-78
Fax: +41 44 878-20-79
info@drahtex.com
www.drahtex.com
Subsidiary

Great Britain

Telegärtner UK Ltd.
London, Great Britain

Telegärtner UK Ltd.
Unit 1 - A1(M) Business Centre
151 Dixons Hill Road, Welham Green,
Hertfordshire AL9 7JE, Great Britain

Tel: +44 1707 636-600
Fax: +44 1707 636-639
info@telegaertner.co.uk
www.telegaertner.co.uk
Subsidiary

Slovakia

Telegärtner Slovakia A.S.
Prešov, Slovakia

Telegärtner Slovakia, A.S.
Budovatelska 38
08001 Prešov
Slovakia

Tel: +421 51 77 25 561
Fax: +421 51 77 25 561
info@telegaertner.co.uk
www.telegaertner.co.uk
Subsidiary

Worldwide Sales Paths – Telegärtner Connects the World

Whether in Tokyo, Johannesburg, or London – Telegärtner is represented throughout the world. From A as in Auckland through M as in Mauritius, to Z as in Zagreb. Naturally, all products comply with the applicable international standards. Other Telegärtner Group production facilities and sales offices lie far beyond the boundaries of Germany: in France, Japan, Singapore, Slovakia, Switzerland, Taiwan, UK, USA...

Telegärtner worldwide
You will find Telegärtner agents always up to date on our homepage www.telegaertner.com

Technical Offices, Agents and System Analysts in Germany

Baden-Württemberg

Telegärtner
Technical Office Stuttgart
Torsten Schäfer

Brühlstr. 32, 71034 Böblingen
Tel.: +49 7031 20486-31
Fax: +49 7031 20486-32
torsten.schaefer@telegaertner.com

Bayern

Telegärtner
Technical Office Augsburg
Horst Renges

Stadtberger Str. 12a, 86457 Augsburg
Tel.: +49 821 43014852
Fax: +49 821 29741645
horst.renges@telegaertner.com

Berlin
Brandenburg
Mecklenburg-Vorpommern Ost
Sachsen-Anhalt Nord

Telegärtner
Technical Office Berlin
Martin Düker

Hennigsdorfer Str. 56, 13503 Berlin
Tel.: +49 30 4148-003
Fax: +49 30 4148-999
martin.dueker@telegaertner.com

Nordrhein-Westfalen
Niedersachsen Süd
Rheinland Pfalz Nord

Telegärtner
Technical Office Köln
Markus Körsgen

Niederheiden 16, 53804 Much
Tel.: +49 2245 9118838
Fax: +49 2245 9118839
markus.koersgen@telegaertner.com

Hamburg, Schleswig-Holstein
Niedersachsen Nord, Bremen
Mecklenburg-Vorpommern
West, Ostwestfalen

Telegärtner
Technical Office Hamburg
Roland Jeschke

Ahrensböker Str. 69h, 23617 Stockelsdorf
Tel.: +49 451 88049294
Fax: +49 451 88049295
roland.jeschke@telegaertner.com

Sachsen-Anhalt Süd
Thüringen
Sachsen

Telegärtner
Technical Office Dresden
Andreas Kobsch

Rudolf-Neff-Weg 7, 01705 Pesterwitz
Tel.: +49 351 65017-42
Fax: +49 351 65017-48
andreas.kobsch@telegaertner.com

Saarland, Hessen,
Rheinland-Pfalz (Südpfalz)
Bayern
(Oberfranken, Unterfranken)

Telegärtner
Technical Office Frankfurt
Ralph Vetter

Escherstr.6, 65510 Idstein
Tel.: +49 6126 700-4594
Fax: +49 6126 700-4641
ralph.vetter@telegaertner.com

Niedersachsen Süd
Thüringen Nord, Hessen Nord
Ost-Westfalen
Sachsen-Anhalt West

Telegärtner
Technical Office Hannover
Christian Rothkamm

Wacholderweg 22, 38268 Lengede
Tel.: +49 5344 915989-0
Fax: +49 5344 915989-1
christian.rothkamm@telegaertner.com

whole Germany

Telegärtner
System Analyst DataVoice
Falk Krüger

Wiesenweg 9, 01968 Kleinkoschen
Tel.: +49 3573-65896-96
Fax: +49 3573-65896-97
falk.krueger@telegaertner.com

You will find Telegärtner stockists and distributors on our homepage

www.telegaertner.com

Technical Information

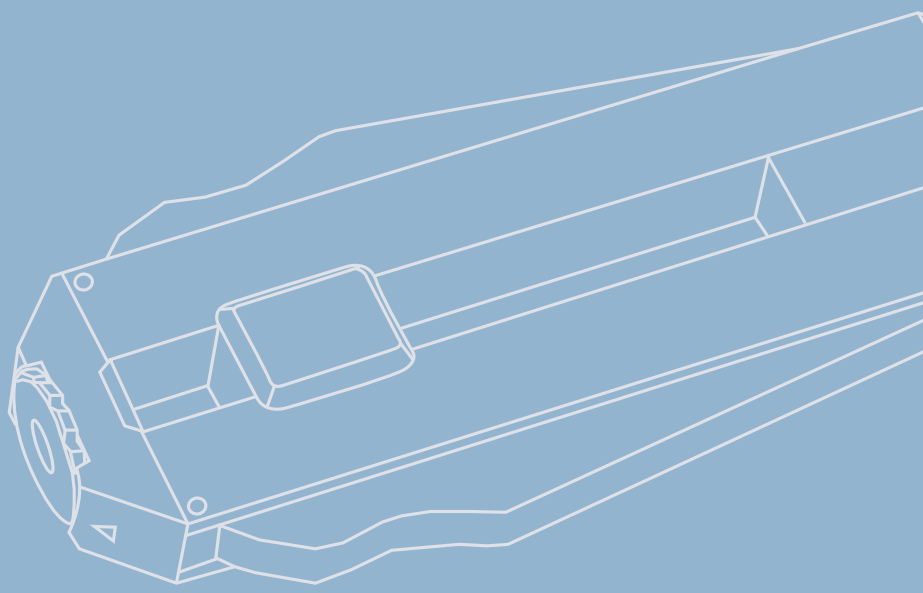

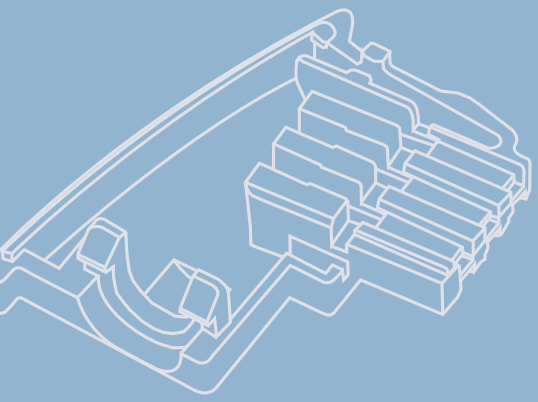

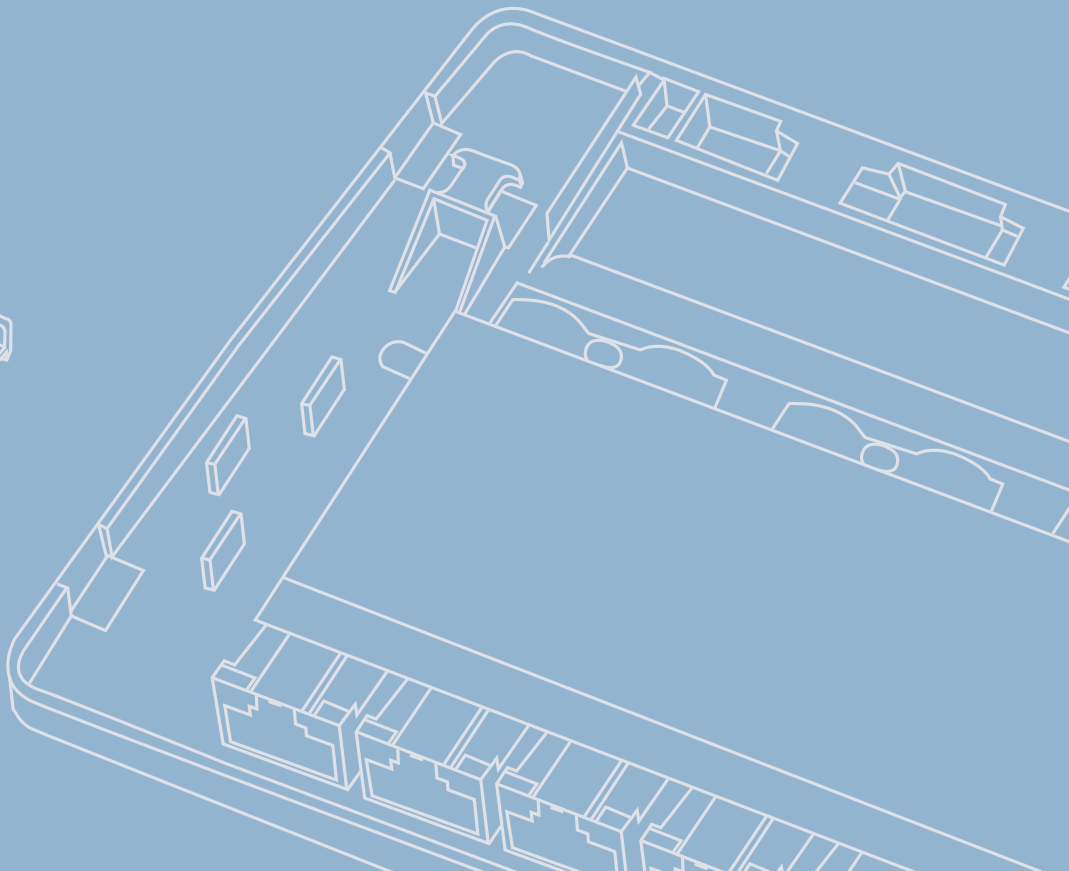

Ethernet in Industrial Networks – a Track Record

Important information: The rules and standards mentioned in this catalogue are constantly updated. It is therefore essential to consult the applicable current issues. The details given in this technical information have been prepared with great care. However, it is not possible to rule out all possibilities of mistakes occurring. Telegärtner therefore accepts no liability for accuracy or for any printing errors. All liability for financial loss, damage to property or personal injury is excluded to the extent permitted by law.

Ethernet has become the dominant IT technology. Introduced in 1973 by Bob Metcalfe, Ethernet has become the predominant standard for office buildings, with growing market shares in telephony and security by replacing the classic analogue systems. More and more industrial networks are also using Ethernet as a general, uniform technology on all levels. Industrial Ethernet has become globally acknowledged. The evolution from central PLCs to decentralized controllers and to distributed intelligence in the field with large, connected production networks has given rise to a rapidly growing need for higher bandwidth. This will continue with the expanding amount of intelligent sensors, actuators, high-resolution video systems, and industry-ready Gigabit Ethernet switches.

There are three levels of communication in an industrial environment: information level, control level, and field level. On the field level, field bus systems are common, but the different bus systems all have one drawback in common: Bus systems are not generic; they are application specific and vendor specific. Different bus systems do not communicate with each other. Furthermore, bus systems need gateways to communicate with the control level. Any changes, such as moving site or adding additional equipment etc., requires that very careful attention is paid to the details of the bus installed. This is different with Industrial Ethernet on the control level and on the information level: Industrial Ethernet runs over generic cabling like Ethernet does in an office environment. The networks in the production plant, at the machines, the systems, and in the offices, are based on the same technology, which leads to easier and more efficient usage and maintenance. Cabling is designed and installed in accordance with the international standards ISO/IEC 24702 and EN 50173-1 and -3 and can be extended without limits. Channel performance classes and component categories ensure reliable and future-proof networks.

MICE Concept

The harsh industrial environment puts far more stress on the components of a data network than an office environment does: Dust, moisture, chemicals, mechanical stress, extreme temperatures, and strong electromagnetic fields make high demands on the cabling components. At the same time, production plants demand maximum reliability and availability. Downtime – even extremely short downtime – is not an option. This is taken into consideration by ISO/IEC 24702, EN 50173-1 and -3 and IEC 61918 1.0 using the MICE matrix. This matrix enables design engineers to specify the environmental circumstances. With MICE, different scenarios and environments can be described in a very comprehensive way. E.g., M1I1C1E1 means an environment with the lowest possible demands like in an office, M3I3C3E3 means the harshest environment such as can be found in power plants. The classes can be mixed, of course, like M3I3C1E1 in the mining industry. After the environmental demands have been specified, the cabling components are chosen following the global standards of ISO/IEC.

MICE is an acronym for

- **M** Mechanical rating: impact, shock, vibration, tensile loads, bruise, ...
- **I** Ingress rating: protection against dust and moisture
- **C** Climatic rating: cold, heat, humidity, UV light, flame-retardence, resistance against chemicals, ...
- **E** Electromagnetic rating: immunity against electromagnetic fields, discharges, spikes, ...

Each of these four ratings is divided into three classes:

Class 1: office environment
Class 2: light duty environment
Class 3: heavy duty environment

RJ45 Connectors

Decades ago, the RJ45 became the universal connector in IT networks. ANSI/TIA-568 offers two pin assignments for the RJ45: T568A and T568B. T568A was developed for military applications, but was opened to civil applications later. To differ from the military standard, manufacturers of connecting hardware developed T568B as a civil version. The current ANSI/TIA standard contains both versions. From a technical point of view, both versions are equal. However, it is vitally important to have the same version on both ends. Nowadays, nearly all plugs and jacks are connected according to T568B.

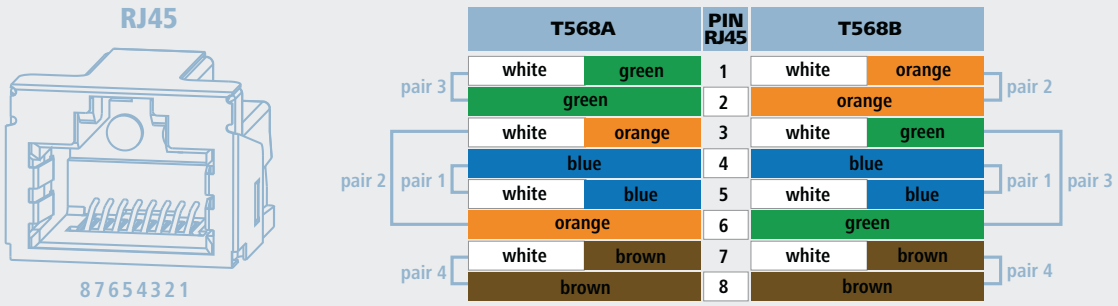

Pin assignments according to T568A (left) and T568B (right)

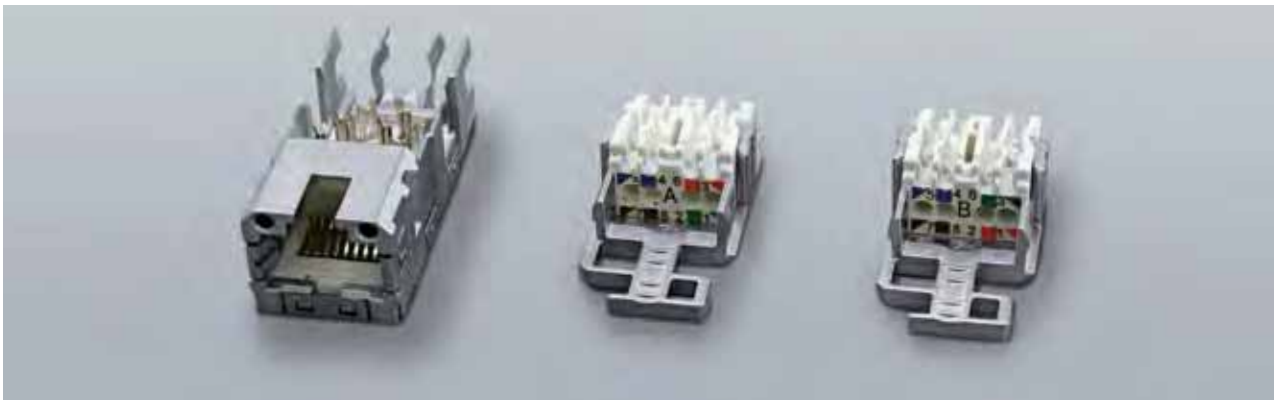

Jack with colour codes for T568A and T568B

Connectors in Industrial-suited Protective Housings

Connections must be protected in the harsh industrial environment against external influences. In practice, various housing variants have prevailed:

Variant 1 IEC 61076-3-106

Automation machines and fieldbus installations
ODVA

Variant 4 IEC 61076-3-106

Ethernet applications, generic cabling in accordance with DIN EN 50173-3, ISO/IEC 24702

Variant 5 IEC 61076-3-106

Heavy duty connectors for harsh environments and for railway, wind power and mechanical engineering applications PROFINET

Variant 6 IEC 61076-3-106

Automation systems and fieldbus installations

Variant 14 IEC 61076-3-117

Automation systems, PROFINET and AIDA standard fieldbus installations

M12 Circular Connectors

Industrial requirements for secure and continuous transfer of constantly increasing data volumes demand cabling solutions which are able to satisfy the needs of today and the future. The cabling of industrial communication networks in accordance with IEC 61918 also provides 4- and 8-pole versions of the M12x1 round connector as a plug interface.

The 4-pole M12x1 D-coded round connectors are standardised in accordance with IEC 61076-2-101 and enable data rates up to 100 Mbit/s. They can be used for installations in the PROFINET environment. For even higher data rates up to 10 Gbit/s the round connector is standardised as an 8-pole version M12x1 with X-coding in accordance with 61076-2-109. This version also allows powering the connected equipment using Power over Ethernet Plus according to IEEE 802.3at. By this, applications such as security or video surveillance (CCTV), passenger information systems (PIS), production systems or production monitoring with high- resolution cameras to be implemented.

Telegärtner offers M12x1 D-coded and X-coded connectors, bulkhead sockets for PCB and pre-assembled connecting cables for transfer of 1–100 Mbit/s or 1–10 Gbit/s with UL listing for installation of industrial communication networks. With field assembly versions of the new M12x1 X-coded Cat.6_A connector, networks can be set up flexibly on site without special tools. The connector offers 360° shield contact and is suitable for both solid and stranded conductors. Both S/FTP and SF/UTP types with a wire diameter of 0.9–1.6 mm and an external diameter of 5.5–9 mm can be used for the connection. As printed circuit board receptacle types with housings for front or rear panel assembly, they are also available without housing and with a quad screen connection to the printed circuit board. The interface therefore offers component manufacturers various options for integration of their products.

Telegärtner also offers pre-assembled connecting cables for the connection between machine or other terminating equipment as well as connection of the machine or terminating device in the switch cabinet. They have SF/UTP 2x2xAWG22/7 PUR design in accordance with the PROFINET specification for the M12x1 D-coded. The connecting cables with M12x1 X-coded have a S/FTP 4x2xAWG26/7 PUR structure and increased temperature range of -40° to + 85°C.

The M12x1 X-coded connectors can be used worldwide in industrial Ethernet systems in accordance with ODVA (Rockwell Automation), PROFINET (Siemens) and CC-Link (Mitsubishi Electric), EtherCAT (Beckhoff Automation) applications.

M12 Circular Connectors

Electrical Engineering Information

Connectors used in industrial networks must meet higher demands than those used in office environments. This includes the criteria described below.

Creepage Distance
The creepage distance is the shortest distance between two conductive parts along the surface of an insulating material. Pollution and/or moisture can make the surface of an insulating material conductive.

Air Gap
The air gap is the shortest distance between two conductive parts through the air gap between them.

Power-frequency Withstand Voltage
The power-frequency withstand voltage is an AC voltage of 50 Hz or 60 Hz for testing the solid insulation between two conductive parts. The insulation must withstand the voltage.

Impulse Withstand Voltage
The impulse withstand voltage is a voltage surge of a fixed level and duration for testing the solid insulation and the air gap between two conductive parts. The test specimen must withstand the voltage. The characteristic of the air gap is dependent on the air pressure and therefore on the height above sea level.

Overvoltage Category
Standard DIN EN 60664-1 assigns electrical equipment (including plugs) to overvoltage categories. For plug connectors, categories I to III are relevant:

Overvoltage category I: for equipment items (including plugs) that are only used in circuits in which overvoltages are limited to an appropriately low level using suitable measures.

Overvoltage category II: for equipment items (including plugs) that are fed by the fixed installation. Overvoltages can occur as a result of switching operations. Overvoltages caused by lightning strikes are not considered.

Overvoltage category III: for equipment items (including plugs) that are subject to special demands in terms of reliability and availability.

Rated Voltage
Voltage at which an equipment item (including plugs) normally operates. The rated voltage depends on the pollution degree, since pollution can be electrically conductive (carbon black, for example) or can be conductive due to moisture. The rated voltage is therefore specified in connection with the pollution degree.

Pollution Degree
Pollutants may be solid, liquid or gaseous. Four pollution degrees are defined in DIN EN 60664-1:

Pollution degree 1: no pollution or only non-conductive pollution

Pollution degree 2: no pollution or only non-conductive pollution, but temporary conductivity is caused by moisture

Pollution degree 3: conductive pollution or pollution that is conductive as a result of moisture but has become dry; non-conductive pollution occurs

Pollution degree 4: permanent conductivity resulting from conductive pollution or moisture

Rated Impulse Voltage
The impulse withstand voltage, as determined by the plug connector manufacturer, which the insulation must be able to withstand at the expected overvoltages.

Current-carrying Capacity
The current-carrying capacity specifies the amperage that is permitted to flow continuously and via all contacts.

Copper Data Cables

ISO developed a standardized, systematic naming for the different types of construction of twisted pair cables. The first letter stands for the overall screen, the second one – separated by a slash – stands for the element screen. "S" means braid screen, "F" means foil screen. "TP" stand for twisted pair, the balanced element. The M12x1 X-coded connector can be used worldwide in industrial Ethernet systems in accordance with ODVA (Rockwell Automation), PROFINET (Siemens) and CC-Link (Mitsubishi Electric), EtherCAT (Beckhoff Automation) applications.

Different types of twisted pair cables

S/FTP: overall braid screen (S), elements foil screened (FTP)
F/UTP: overall foil screen (F), elements unscreened (UTP)
SF/UTP: overall braid and foil screen (SF), elements unscreened (UTP)
U/UTP: no overall screen (U), elements unscreened (UTP)

Twisted pair cables are available with solid and stranded conductors.

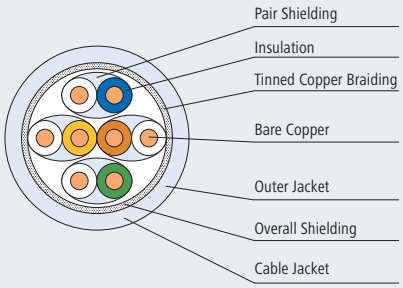

solid

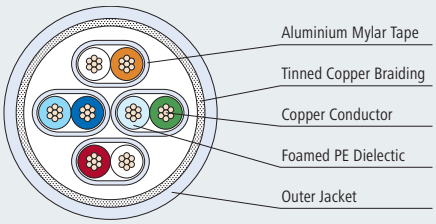

stranded

Class and Category

„Class“ means something completely different than „category“. The class (or category link in American English) always applies to the installed link, the category as such applies only to one single component, e.g. the cable or the outlet; the component is tested and verified by either the labs of the manufacturer or independent verification labs. The installed link is always tested according to classes (or category links).

Cabling classes according to ISO/IEC 11801-1

Class D: frequency range up to 100 MHz, for data rates up to 1 Gbps
Class E: frequency range up to 250 MHz, for data rates up to 1 Gbps
Class E_A: frequency range up to 500 MHz, for data rates up to 10 Gbps
Class F: frequency range up to 600 MHz, for multi-media applications
Class F_A: frequency range up to 1,000 MHz, for multi-media applications

Cabling Classes according to ISO/IEC 11801-5

The standards for the Cabling Classes I and II for 40 GBASE-T for copper data cables up to 30 m channel length for applications in high performance data centers are currently discussed. They will have a frequency band up to 2,000 MHz. For the Classes I and II there will be two component categories: Category 8.1 will be based on Category 6_A, will use the RJ45 connector and will be backwards compatible with categories 5/5e, 6 and 6_A. Category 8.2 will be based on Category 7_A. It will be backwards compatible to all categories including Cat. 7 und 7_A but will use non-RJ45 connectors.

Class I: up to 2,000 MHz, for 40GBASE-T at 30 m channel length (24 m permanent link, 2x3 m patch cords), based on components of the Category 8.1.

Class II: up to 2,000 MHz, for 40GBASE-T at 30 m channel length (24 m permanent link, 2x3 m patch cords), based on components of the Category 8.2.

Component categories according to ISO/IEC 11801-1:

Category 5: frequency range up to 100 MHz, for data rates up to 1 Gbps
Category 6: frequency range up to 250 MHz, for data rates up to 1 Gbps
Category 6_A: frequency range up to 500 MHz, for data rates up to 10 Gbps
Category 7: frequency range up to 600 MHz, for multi-media applications
Category 7_A: frequency range up to 1,000 MHz, for multi-media applications

Component categories according to ISO/IEC 11801-5:

Category 8.1: RJ45 according to IEC 60603-7-81, up to 2,000 MHz, for 40 GBASE-T at 30 m channel length, backwards compatible to category 5, 6 and 6_A for 10 GBASE-T at 100 m channel length

Category 8.2: TERA, GG45, ARJ45 nach IEC 60603-7-82, up to 2,000 MHz, for 40GBASE-T at 30 m channel length, backwards compatible to category 7 and 7_A for 10GBASE-T at 100 m channel length.

Fiber Optic Networks

Depending on the application, fiber optics offer advantages over copper data cables: They are smaller, more flexible and allow longer cable lengths and higher data rates. Multimode fiber optics are used in preference for cable lengths of several hundred metres. Put simply, several light beams can travel through these at the same time. LEDs and VCSELs (simple lasers, such as those used in CD and DVD drives) are used as light sources. Singlemode fibers are used for cables of even longer lengths, in which – also put simply – only a single light beam is transmitted. The light source used is a conventional laser, sometimes with high transmission power.
The OM2 to OM4 performance classes are common for multimode fibers. Only the OS2 class is used for singlemode fibers.

Maximum data rate	Type. fiber performance class	Type. cable lengths
1 Gbit/s	Multimode OM2	550 m
10 Gbit/s	Multimode OM3	100 m
10 Gbit/s	Multimode OM4	150 m
10 Gbit/s	Single mode OS2	Several kilometres

The exact cable lengths are dependent on the Ethernet variant used. For details, see standard IEEE 802.3.

Fiber Optic Connectors

Four types of fiber optics connectors are mainly used in the industrial sector: ST, SC, LC and E2000. Plugs for singlemode fibers come in the standard version with a vertically cut end surface (physical contact version or "PC") and with an obliquely cut end surface ("angled physical contact" version or "APC") and outstanding optical performance.

ST connector IEC 61754-2

Relatively old connector type, which is found almost exclusively in existing installations

SC connector IEC 61754-4

Non-twisting connector, replaced by the LC connector as a result of its relatively large dimensions

LC connector IEC 61754-20

Compact connector with very good optical performance, standard connetor for most applications

E2000 connector IEC 61754-15

Connector with excellent optical performance, originates from the telecommunication technology

Plastic Fibers

For large distances or environments with strong electromagnetic fields, optical networks can be an option. However, the cost of fibre optic cables with glass fibres, such as those used for telecommunication, is very often out of all proportions for industrial networks. Plastic fibres can offer economical and technical advantages. Polymere optical fibres (POF) are cheap and easy to install. As opposed to glass fibres, no special tools are needed. Installation and connection can be done quickly and reliably, without the need for expensive splice tools or time-consuming polishing. The advantages of POF over copper cables are the same as those offered by glass fibres: immunity against electromagnetic fields, no emission, and potential-free links. Typical link lengths are from 25 up to 100 metres. More and more controllers are available with POF connections.

Protection against Foreign Bodies and Water

Protection against touch and foreign bodies acc. IEC 60529

First Code Number	Description
0	No particular protection
1	Protection against ingress of solid foreign bodies with a diameter over 50 mm
2	Protection against solid foreign bodies with a diameter over 12,5 mm Protection against vertically dripping
3	Protection against ingress of solid foreign bodies with a diameter over 2,5 mm
4	Protection against ingress of solid foreign bodies with a diameter over 1,0 mm
5	Dust protected
6	Dust-proof

Protection against water acc. IEC 60529

Second Code Number	Description
0	No particular protection
1	Protection against dripping water
2	Protection against vertically dripping water. There must be no harmful effect on materials tipped (in a container) up to 15° from it is normal position
3	Protection against fine water spray
4	Protection against water spray
5	Protection against water jet
6	Protection against strong water spray jet
7	Protection against water, when the material is immersed in water
8	The material is suitable for continous submersion in water

The Most Important AWG Dimensions for Industrial Ethernet

AWG	d/mm	A/mm²	d/inch	A/inch²	Metric cable A/mm²
22	0.64	0.33	0.0253	0.0253	0.5
23	0.57	0.26	0.0226	0.0226	0.25
24	0.51	0.2	0.0201	0.0201	0.25
25	0.45	0.16	0.0179	0.0179	0.2
26	0.4	0.13	0.0159	0.0159	0.14
27	0.36	0.1	0.0142	0.0142	0.1

Errors and omissions excepted.

Please note: AWG stands for American Wire Gauge. This historic US measure was formerly used to denote the number of drawing dies through which a wire is pulled during production. Because the wire manufacturers each used their own dies, deviations in the exact diameters of wires were possible. In the meantime, the AWG dimensions have been standardised according to ASTM B528. The conversion is done using the conductor cross-section as a basis. A solid wire is used as a basis here for specifying the outside diameter. Conductors with several wires have a larger core diameter because of the space between the individual wires.

For conductors with several wires, the number of wires per core is indicated by a slash after the AWG number, for example AWG24/7 for a dimension AWG24 core with seven fine wires. In single-wire (solid) conductors, the suffix "/1" is mostly omitted, so "AWG22" is often used instead of "AWG22/1".

Conformity Marks

Telegärtner products undergo strict quality and safety testing on a regular basis.

The "UL listed" mark is used by the independent UL (Underwriters Laboratories) testing institute to certify that a product meets the strict safety requirements that UL has defined. The "US" on the right of the circle indicates that the requirements for the United States have been met, while the "C" on the left of the circle applies to Canada. UL listed products have a test number (listing number) assigned to them, which the manufacturer provides on request.

The "UL Recognized Component" mark is used by the independent UL (Underwriters Laboratories) testing institute to certify that the component bearing the mark meets the stringent UL safety requirements. The "US" on the right indicates that the requirements for the United States are met, while the "C" applies to Canada.

As part of the Premium Verification Program, connection components, cables and patch cables are tested in accordance with national and international standards by the independent test lab GHMT AG. In this process, components are not submitted by manufacturers for testing – GHMT AG takes samples at its own discretion.

Telegärtner is also one of the world's leading metrology companies. Products undergo stringent tests in our own laboratory. The "Real-time re-embedded" measuring procedure determines whether a product meets the strict requirements of category 6_A for data network technology components.

Telegärtner is one of the few companies in the world that measures components its own measurement laboratory without using additional baluns as measuring adaptors between test specimens and the test equipment. In the "Real-time direct fixture" testing procedure the test equipment is connected directly to the fixture of the component to be tested. This leads to more accurate and more reliable test results than any conventional method could offer.

Product solutions in this catalogue bearing the PROFINET logo meet or exceed the requirements specified in the PROFINET Cabling Guides. A list of the PROFINET-compliant products can be found on our website in the "Approvals" section.

1

Components for the Floor Distributor - RJ45/FO

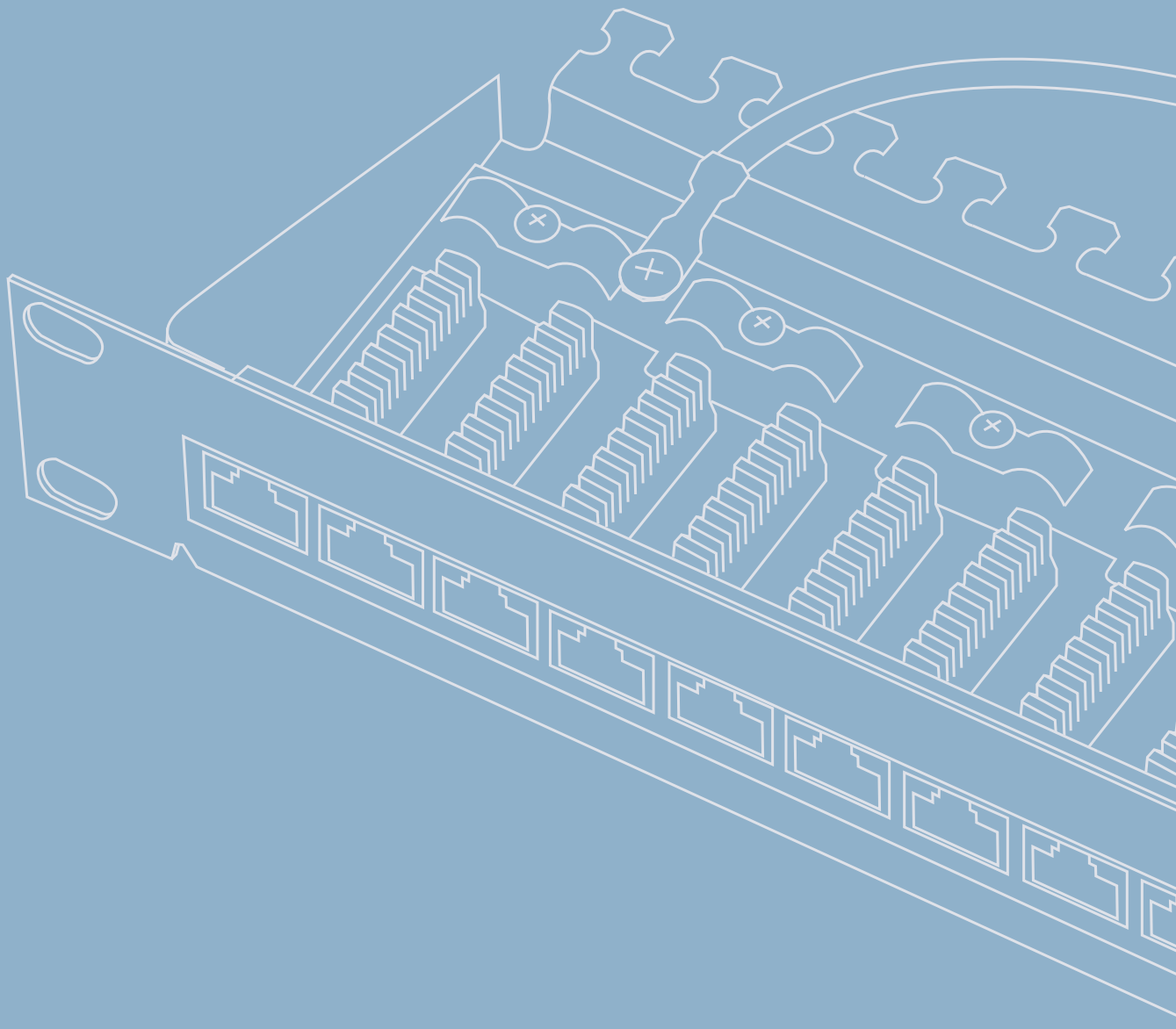

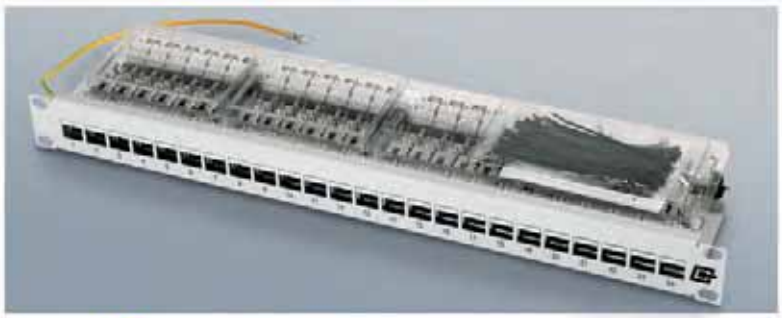

1 Components for the Floor Distributor - RJ45/FO

1.1 AMJ 19“ Frontplate 49

1.2 19“ FO Patch Panels 55

1.2.1 ECONOMY V assembled 55

1.2.2 BASIS V assembled 57

1.3 Accessories 60

For generic cabling inside floor distributors Telegärtner offers flexible 19" patch panel solutions for RJ45 and FO connections. Users benefit from a unique and consistent connector and connection technology to realize a persistent link from the floor distributor to the machine.

AMJ 19" Frontplate

1.1

	19" Frontplate	19" Frontplate Flex	19" Feedthrough Panel
Standards			
Generic cabling systems	-	-	ISO/IEC 11801, EN 50173-1
Connectors	-	-	IEC 60603-7-5
19" Safes und 19" Housings	IEC 60297-1; IEC 60297-2; DIN 41494 part 1/7; EIA 310		
Mechanical Characteristics			
Insertion force	-	-	≤ 20 N
Life (mating cycles RJ45, RJ12, RJ11)	-	-	≥ 750
Material: shield	-	-	brass, 30 µm nickel plated
Material: contact spring	-	-	spring steel
Material: contact spring finish	-	-	min. 0,8 µm Au on 1,2 µm Ni
Material: housing rear part	-	sheet steel, zinc plated	-
Material: jack housing	-	ABS alpine white	ABS PA alpine white
Material: ground cable AWG 16 with terminal	-	-	E-Cu-braid with PVC insulation; tin plated
Material: housing	sheet steel zinc plated, powder coated, light grey RAL 7035		
Bonding cable AWG 11 with terminal	E-Cu-braid with PVC insulation; tin plated		-
Environmental Requirements			
Protection against particulate ingress	-	-	IP2X
Protection against water / immersion	-	-	IPX0
Ambient temperature	-40° C to + 70° C	-40° C to + 70° C	-40° C to + 70° C
Rapid change of temperature	-40° C to + 70° C / 25 cycles t=30 min.	-	-40° C to + 70° C / 25 cycles t=30 min.
Climatic damp heat	+25° C / +65° C / 93% RH // -10° C / 21 cycles	-	+25° C / +65° C / 93% RH // -10° C / 21 cycles
Electrical Characteristics			
Current carrying capacity at 50°C	-	-	1 A
PoE+ acc to IEEE 802.3at	-	-	fulfilled
Transmission Characteristics			
10 Gigabit Ethernet acc. to IEEE 802.3an	-	-	fulfilled

	AMJ-S Module Cat.6_A		AMJ Module K Cat.6_A	AMJ Coupler Cat.6/Cat.5e
	AMJ-S 2G	AMJ-S		
Standards				
Connectors	IEC 60603-7-51	IEC 60603-7-51	IEC 60603-7-51	IEC 60603-7-5 / -7-3
Mechancial Characteristics				
Insertion force	≤ 30 N	≤ 30 N	≤ 30 N	≤ 30 N
Life (mating cycles RJ45, RJ12, RJ11)	≥ 750	≥ 750	≥ 750	≥ 750
Material: housings	zinc diecast	zinc diecast	zinc diecast	zinc diecast
Material: insulation housing	-	-	-	ABS alpine white
Material: snap-fit	spring steel	spring steel	PC UL94 V0 black	zinc diecast
Material: shield	German silver	German silver	German silver	German silver
Material: insulators	PC UL94 V0	PC UL94 V0	PBT	PA
Material: PCB	FR4	FR4	FR4	FR4
Material: PCB finish	chem. tin-plated	chem. tin plated	chem. tin plated	chem. tin plated
Material: contact spring	spring steel	spring steel	spring steel	spring steel
Material: contact spring finish	min. 0,8 µm (30 µin) Au on 1,2 µm (50µin) Ni			
Material: contact IDC termination	CuNi2Si	CuNi2Si	CuNi2Si	-

1.1 AMJ 19" Frontplate

	AMJ-S Module Cat.6$_A$		AMJ Module K Cat.6$_A$	AMJ Coupler Cat.6/Cat.5e
	AMJ-S 2G	AMJ-S		
Mechanical Characteristics				
Material: IDC termination finish	min. 3-6 µm (120-240 µin) Sn			-
Material: cable ties	-	-	PA UL94 V2	-
Cu-Conductor diameter: solid	0.41 - 0.64 mm AWG 26/1 - AWG 22/1	0.41 - 0.64 mm AWG 26/1 - AWG 22/1	0.41 - 0.64 mm AWG 26/1 - AWG 22/1	-
Cu-Conductor diameter: stranded	0.48- 0.76 mm AWG 26/7 - AWG 22/7	0.46 - 0.76 mm AWG 27/7 - AWG 22/7	0.46 - 0.76 mm AWG 27/7 - AWG 22/7	-
Insulation diameter	0.9 - 1.6 mm	0.9 - 1.6 mm	0.9 - 1.6 mm	-
Material: cable clamp	PC UL94 V0	PC UL94 V0	-	-
Cable diameter	max. 9 mm	max. 9 mm	max. 9 mm	-
Environal Requirements				
Ambient temperature	-40° C to +85° C	-40° C to +85° C	-40° C to +70° C	-40° C to +70° C
Electrical Characteristics				
Contact resistance	≤ 20 mΩ	≤ 20 mΩ	≤ 20 mΩ	≤ 20 mΩ
Insulation resistance	≥ 500 MΩ	≥ 500 MΩ	≥ 500 MΩ	≥ 500 MΩ
Voltage proof: contact-contact	≥ 1000 V, DC	≥ 1000 V, DC	≥ 1000 V, DC	≥ 1000 V, DC
Voltage proof: contact-shield	≥ 1500 V, DC	≥ 1500 V, DC	≥ 1500 V, DC	≥ 1500 V, DC
Current carrying capacity at 50° C	1 A	1 A	1 A	1 A
PoE+ acc. to IEEE 802.3at	Adequate for Power over Ethernet+			
Transmission Characteristics				
Category 6$_A$ (Component)	ISO/IEC 11801, DIN EN 50173-1			-
Class E$_A$ (Permanent Link)	ISO/IEC 11801, DIN EN 50173-1			-
Class E$_A$ (Channel)	ISO/IEC 11801, DIN EN 50173-1			
Class E (Channel with Coupler Cat.6)	-	-	-	ISO/IEC 11801, DIN EN 50173-1
Class D (Channel with Coupler Cat.5e)	-	-	-	ISO/IEC 11801, DIN EN 50173-1
Gigabit Ethernet acc. to IEEE 802.3	-	-	fulfilled	fulfilled
10 Gigabit Ethernet acc. to IEEE 802.3an	fulfilled	fulfilled	fulfilled	fulfilled for Cat.6
UL	-	fulfilled	-	-
PVP	fulfilled	-	-	-

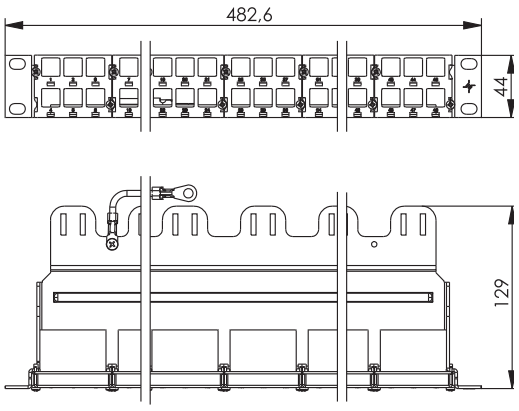

AMJ-S

Order no.	Short name	Type	Remarks	Series	Colour
H02025A0236	19" Frontplate 1 HU for 48 AMJ-S Modules	incl. cable strain relief and bonding kit, without Module/Coupler	48 Ports	AMJ-S	sheet steel zinc plated

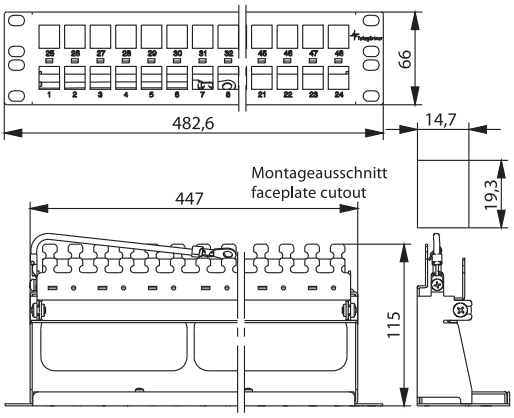

AMJ-S
AMJ

Order no.	Short name	Type	Remarks	Series	Colour
H02025A0171	19" frontplate 1,5 HU	incl. cable strain relief and bonding kit, without Module/Coupler	48 Ports	AMJ-S; AMJ Module K; AMJ Coupler K; UMJ Module K; UMJ Coupler K	light grey RAL 7035
H02025A0241	19" frontplate 1,5 HU	incl. cable strain relief and bonding kit, without Module/Coupler	48 Ports	AMJ-S; AMJ Module K; AMJ Coupler K; UMJ Module K; UMJ Coupler K	black

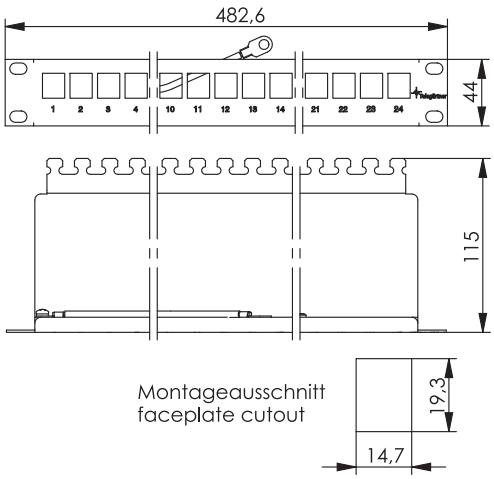

AMJ-S
AMJ

Order no.	Short name	Type	Remarks	Series	Colour
H02025A0167	19" Frontplate 1 HU	incl. cable strain relief and bonding kit, without Module/Coupler	24 ports	AMJ-S; AMJ Module K; AMJ Coupler K; UMJ Module K; UMJ Coupler K	light grey RAL 7035
H02025A0220	19" Frontplate 1 HU	incl. cable strain relief and bonding kit, without Module/Coupler	24 ports	AMJ-S; AMJ Module K; AMJ Coupler K; UMJ Module K; UMJ Coupler K	black

1.1 AMJ 19" Frontplate

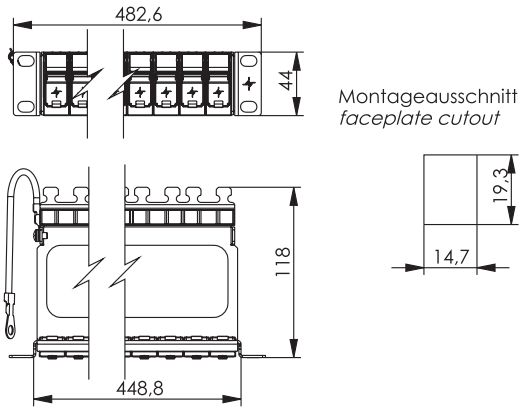

AMJ
AMJ-S

Order no.	Short name	Type	Remarks	Series	Colour
H02025A0234	19" Frontplate Flex 1 HU	incl. 24 snap-in bezels, cable management, cable strain relief and bonding kit, without Module/Coupler	24 ports	AMJ-S Module; AMJ Module K; AMJ Coupler K; UMJ Module K; UMJ Coupler K	frontplate light grey RAL 7035/ faceplate alpine white
H02025A0199	19" Frontplate Flex 1 HU	incl. 24 snap-in bezels, cable management, cable strain relief and bonding kit, without Module/Coupler	24 ports	AMJ Module K; AMJ Coupler K; UMJ Module K; UMJ Coupler K	frontplate light grey RAL 7035/ faceplate alpine white

Cat.6A
AMJ-S
REAL-TIME RE-EMBEDDED

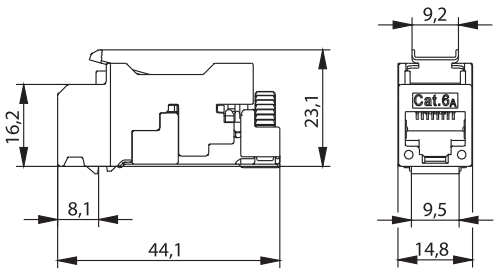

Order no.	Short name	Type	Remarks	Mount. dim.
J00029A3110	AMJ-S Module 2G Cat.6A T568A	blister package (24 pcs.)	tool-free connectivity, suitable for RJ45/11/12 plugs	Z121
J00029A3111	AMJ-S Module 2G Cat.6A T568B	blister package (24 pcs.)	tool-free connectivity, suitable for RJ45/11/12 plugs	Z121

Cat.6A
AMJ-S
REAL-TIME RE-EMBEDDED

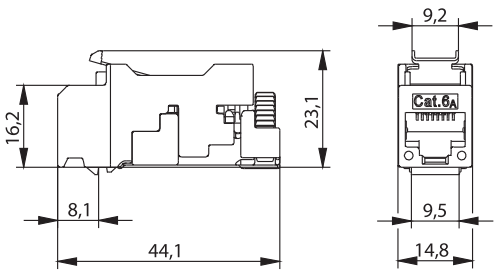

Order no.	Short name	Type	Remarks	Mount. dim.
J00029A2110	AMJ-S Module Cat.6A T568A	blister package (24 pcs.)	tool-free connectivity, suitable for RJ45/11/12 plugs	Z121
J00029A2111	AMJ-S Module Cat.6A T568B	blister package (24 pcs.)	tool-free connectivity, suitable for RJ45/11/12 plugs	Z121

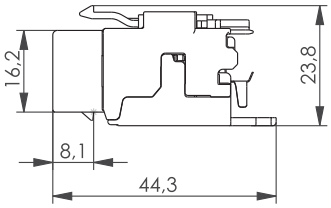

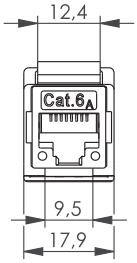

Cat.6A AMJ REAL-TIME RE-EMBEDDED

Order no.	Short name	Type	Remarks	Mount. dim.
J00029L0036	AMJ Module K Cat.6_A T568A	blister package (24 pcs.)	tool-free connectivity, suitable for RJ45/11/12 plugs	Z121
J00029B0077	AMJ Module K Cat.6_A T568B	blister package (24 pcs.)	tool-free connectivity, suitable for RJ45/11/12 plugs	Z121

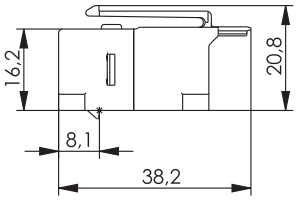

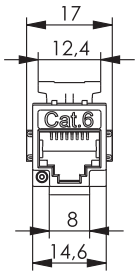

Order no.	Short name	Description	Type	Remarks	Mount. dim.
J00029B0061	AMJ Coupler K Cat.6, f-f	suitable for Class E_A Channel, 10 Gigabit Ethernet	blister package (24 pcs.)	suitable for RJ45/11/12 plugs	Z121
J00029L0051	AMJ Coupler K Cat.5e, f-f	suitable for Class E Channel, 1 Gigabit Ethernet	blister package (24 pcs.)	suitable for RJ45/11/12 plugs	Z121

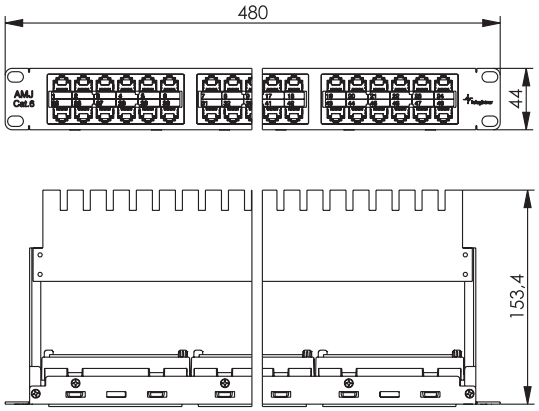

Order no.	Short name	Type	Remarks	Colour
J02024A0007	19" Feedthrough panel, 1 HU	incl. 48 AMJ Coupler K Cat.6 (4x12), cable strain relief and bonding kit	suitable for RJ45/11/12 plugs	light grey RAL 7035
J02024C0007	19" Feedthrough panel, 1 HU	incl. 48 AMJ Coupler K Cat.6 (4x12), cable strain relief and bonding kit	suitable for RJ45/11/12 plugs	black

1.1 AMJ 19" Frontplate

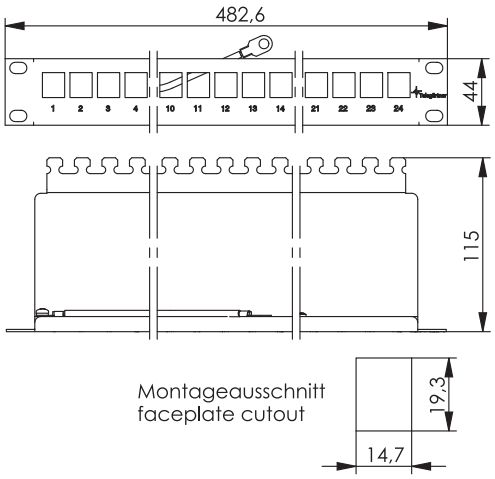

Cat.6A
AMJ-S
REAL-TIME RE-EMBEDDED

Order no.	Short name	Type	Remarks	Colour
J02023A0039	19" Frontplate 1 HU	incl. 24 AMJ-S Modules Cat.6A T568A, cable strain relief and bonding kit	tool-free connectivity, suitable for RJ45/11/12 plugs	light grey RAL 7035
J02023A0040	19" Frontplate 1 HU	incl. 24 AMJ-S Modules Cat.6A T568B, cable strain relief and bonding kit	tool-free connectivity, suitable for RJ45/11/12 plugs	light grey RAL 7035

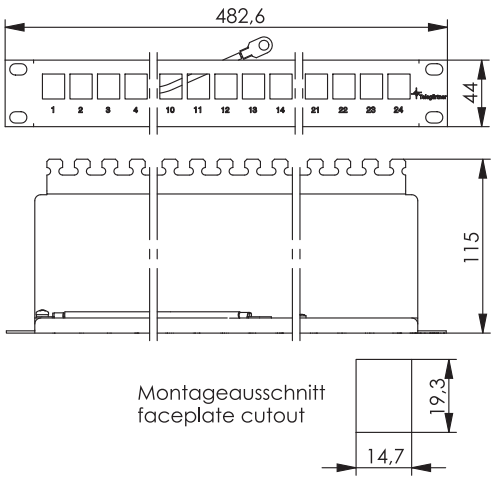

Cat.6A
AMJ
REAL-TIME RE-EMBEDDED

Order no.	Short name	Type	Remarks	Colour
J02023K0027	19" Frontplate 1 HU	incl. 24 AMJ Modules K Cat.6A T568A, cable strain relief and bonding kit	tool-free connectivity, suitable for RJ45/11/12 plugs	light grey RAL 7035
J02023A0033	19" Frontplate 1 HU	incl. 24 AMJ Modules K Cat.6A T568A, cable strain relief and bonding kit	tool-free connectivity, suitable for RJ45/11/12 plugs	black
J02023A0034	19" Frontplate 1 HU	incl. 24 AMJ Modules K Cat.6A T568B, cable strain relief and bonding kit	tool-free connectivity, suitable for RJ45/11/12 plugs	light grey RAL 7035
J02023A0035	19" Frontplate 1 HU	incl. 24 AMJ Modules K Cat.6A T568B, cable strain relief and bonding kit	tool-free connectivity, suitable for RJ45/11/12 plugs	black

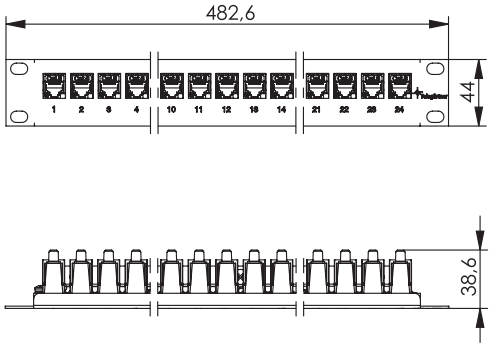

Order no.	Short name	Type	Remarks	Colour
J02023A0026	19" Frontplate 1 HU	incl. 24 AMJ Coupler K Cat.6, bonding kit, without cable strain relief	suitable for Class E_A Channel, suitable for RJ45/11/12 plug	light grey RAL 7035
J02023K0025	19" Frontplate 1 HU	incl. 24 AMJ Coupler K Cat.5e, bonding kit, without cable strain relief	suitable for Class E Channel, 1 Gigabit Ethernet, suitable for RJ45/11/12 plug	light grey RAL 7035

19" FO Patch Panels 1.2

19" Patch Panels for Fibre Optic are suitable for distribution of multifibre cables to single cables, either as a distribution frame or - with closed housing - for storage of splice cassettes. They may be integrated into all standard 19" racks and - due to the modular design - be varied in accordance with the individual requirements of the customer. Housings and front plates are available in up to 3 HU. All the necessary accessories such as cable glands, splice cassettes, FO adaptors and fixing parts may be individually combined and also assembled, if required.
Tip: Using the Telegärtner TICNET configurator, you can compile patch panels, FO pigtails, patch- and adaptor cables in simplex or duplex design quickly and simply online:
www.telegaertner.com/ticnet

	ECONOMY V	BASIS V
Mechanical Characteristics		
Housing	sheet steel 1 mm, powder-laminated, light grey RAL 7035	
Protection class acc. To IEC 60529	IP20	IP20
Front plates	sheet aluminum 1,5 mm, powder-laminated, light grey RAL 7035, port no. imprinted, marking strip with plastic cover optional	
Cable entries	strain relief bar for cable ties	2x M20; 2x M25
Panel piercings	for ST, SC, SC Duplex, E2000, LC Duplex, FC	for ST, SC, SC Duplex, E2000, LC Duplex, FC
Dimensions in mm	**1 HU**	**1 HU**
Width	482	482
Height	44	44
Depth	175	265

ECONOMY V assembled 1.2.1

Performance Characteristics

- for installation of Breakout cables, Mini Breakout cables and TICNET pre-terminated cables
- fixed housing
- 2 fixing brackets included, 50 mm recessed mounting possible

Scope of delivery:

- housing
- front plate
- adaptors
- strain relief

1.2 19" FO Patch Panels

1.2.1 ECONOMY V assembled

Order no.	Housing type	Number of Adaptors	Adaptor Type	Adaptor: Colour	Remarks
H02030A0018	ECONOMY V 1 HU	12	ST, ceramic sleeve, metal housing	metal	for singlemode and multimode
H02030A0021	ECONOMY V 1 HU	24	ST, ceramic sleeve, metal housing	metal	for singlemode and multimode

Order no.	Housing type	Number of Adaptors	Adaptor Type	Adaptor: Colour	Remarks
H02030A0016	ECONOMY V 1 HU	6	SC Duplex, ceramic sleeve, plastic housing	blue	for singlemode and multimode
H02030M0016	ECONOMY V 1 HU	6	SC Duplex, ceramic sleeve, plastic housing	beige	for multimode
H02030T0016	ECONOMY V 1 HU	6	SC Duplex, ceramic sleeve, plastic housing	aqua	for multimode OM3
H02030V0016	ECONOMY V 1 HU	6	SC Duplex, ceramic sleeve, plastic housing	black	for multimode OM4
H02030A0019	ECONOMY V 1 HU	12	SC Duplex, ceramic sleeve, plastic housing	blue	for singlemode and multimode
H02030M0019	ECONOMY V 1 HU	12	SC Duplex, ceramic sleeve, plastic housing	beige	for multimode
H02030T0019	ECONOMY V 1 HU	12	SC Duplex, ceramic sleeve, plastic housing	aqua	for multimode OM3
H02030V0019	ECONOMY V 1 HU	12	SC Duplex, ceramic sleeve, plastic housing	black	for multimode OM4
H02030A0022	ECONOMY V 1 HU	24	SC Duplex, ceramic sleeve, plastic housing	blue	for singlemode and multimode
H02030M0022	ECONOMY V 1 HU	24	SC Duplex, ceramic sleeve, plastic housing	beige	for multimode
H02030T0022	ECONOMY V 1 HU	24	SC Duplex, ceramic sleeve, plastic housing	aqua	for multimode OM3
H02030V0022	ECONOMY V 1 HU	24	SC Duplex, ceramic sleeve, plastic housing	black	for multimode OM4

Order no.	Housing type	Number of Adaptors	Adaptor Type	Adaptor: Colour	Remarks
H02030A0608	ECONOMY V 1 HU	6	LC Duplex, ceramic sleeve, plastic housing	blue	for singlemode and multimode
H02030M0608	ECONOMY V 1 HU	6	LC Duplex, ceramic sleeve, plastic housing	beige	for multimode
H02030T0608	ECONOMY V 1 HU	6	LC Duplex, ceramic sleeve, plastic housing	aqua	for multimode OM3
H02030V0608	ECONOMY V 1 HU	6	LC Duplex, ceramic sleeve, plastic housing	black	for multimode OM4
H02030A0609	ECONOMY V 1 HU	12	LC Duplex, ceramic sleeve, plastic housing	blue	for singlemode and multimode
H02030M0609	ECONOMY V 1 HU	12	LC Duplex, ceramic sleeve, plastic housing	beige	for multimode
H02030T0609	ECONOMY V 1 HU	12	LC Duplex, ceramic sleeve, plastic housing	aqua	for multimode OM3
H02030V0609	ECONOMY V 1 HU	12	LC Duplex, ceramic sleeve, plastic housing	black	for multimode OM4
H02030A0610	ECONOMY V 1 HU	24	LC Duplex, ceramic sleeve, plastic housing	blue	for singlemode and multimode
H02030M0610	ECONOMY V 1 HU	24	LC Duplex, ceramic sleeve, plastic housing	beige	for multimode
H02030T0610	ECONOMY V 1 HU	24	LC Duplex, ceramic sleeve, plastic housing	aqua	for multimode OM3
H02030V0610	ECONOMY V 1 HU	24	LC Duplex, ceramic sleeve, plastic housing	black	for multimode OM4

Performance Characteristics

- for installation of multifiber cables and TICNET pre-terminated cables
- fixed housing
- 2 fixing brackets included, 50 mm recessed mounting possible

Scope of delivery

- housing with each 2 cable entries for M20 and M25 cable glands
- 1 cable gland M20 for 5-9 mm
- 1 cable gland M25 for 9-16 mm
- 2 covers for M20 and M25
- splice cassette with integrated crimp splice holders for max. 24 fibers and cover
- front plate
- adaptors and pigtails see tables

Panels with pigtails include crimp splice protectors type Telekom and marking strip.

Order no.	Housing type	Number of Adaptors	Adaptor Type	Adaptor: Colour	Number of Splice Cassettes	Remarks
H02030A0000	BASIS V 1 HU	12	ST, ceramic sleeve, metal housing	metal	1	for singlemode and multimode
H02030A0001	BASIS V 1 HU	24	ST, ceramic sleeve, metal housing	metal	2	for singlemode and multimode

Order no.	Housing type	Number of Adaptors	Adaptor Type	Adaptor: Colour	Number of Splice Cassettes	Remarks
H02030A0008	BASIS V 1 HU	6	SC Duplex, ceramic sleeve, plastic housing	blue	1	for singlemode and multimode
H02030M0008	BASIS V 1 HU	6	SC Duplex, ceramic sleeve, plastic housing	beige	1	for multimode
H02030T0008	BASIS V 1 HU	6	SC Duplex, ceramic sleeve, plastic housing	aqua	1	for multimode OM3
H02030V0008	BASIS V 1 HU	6	SC Duplex, ceramic sleeve, plastic housing	black	1	for multimode OM4
H02030A0009	BASIS V 1 HU	12	SC Duplex, ceramic sleeve, plastic housing	blue	2	for singlemode and multimode
H02030M0009	BASIS V 1 HU	12	SC Duplex, ceramic sleeve, plastic housing	beige	2	for multimode
H02030T0009	BASIS V 1 HU	12	SC Duplex, ceramic sleeve, plastic housing	aqua	2	for multimode OM3
H02030V0009	BASIS V 1 HU	12	SC Duplex, ceramic sleeve, plastic housing	black	2	for multimode OM4
H02030A0034	BASIS V 1 HU	24	SC Duplex, ceramic sleeve, plastic housing	blue	2	for singlemode and multimode
H02030M0034	BASIS V 1 HU	24	SC Duplex, ceramic sleeve, plastic housing	beige	2	for multimode
H02030T0034	BASIS V 1 HU	24	SC Duplex, ceramic sleeve, plastic housing	aqua	2	for multimode OM3
H02030V0034	BASIS V 1 HU	24	SC Duplex, ceramic sleeve, plastic housing	black	2	for multimode OM4

Order no.	Housing type	Number of Adaptors	Adaptor Type	Adaptor: Colour	Number of Splice Cassettes	Remarks
H02030A0590	BASIS V 1 HU	6	LC Duplex, ceramic sleeve, plastic housing	blue	1	for singlemode and multimode
H02030M0590	BASIS V 1 HU	6	LC Duplex, ceramic sleeve, plastic housing	beige	1	for multimode
H02030T0590	BASIS V 1 HU	6	LC Duplex, ceramic sleeve, plastic housing	aqua	1	for multimode OM3
H02030V0590	BASIS V 1 HU	6	LC Duplex, ceramic sleeve, plastic housing	black	1	for multimode OM4
H02030A0491	BASIS V 1 HU	12	LC Duplex, ceramic sleeve, plastic housing	blue	2	for singlemode and multimode
H02030M0491	BASIS V 1 HU	12	LC Duplex, ceramic sleeve, plastic housing	beige	2	for multimode
H02030T0491	BASIS V 1 HU	12	LC Duplex, ceramic sleeve, plastic housing	aqua	2	for multimode OM3
H02030V0491	BASIS V 1 HU	12	LC Duplex, ceramic sleeve, plastic housing	black	2	for multimode OM4
H02030A0492	BASIS V 1 HU	24	LC Duplex, ceramic sleeve, plastic housing	blue	2	for singlemode and multimode
H02030M0492	BASIS V 1 HU	24	LC Duplex, ceramic sleeve, plastic housing	beige	2	for multimode
H02030T0492	BASIS V 1 HU	24	LC Duplex, ceramic sleeve, plastic housing	aqua	2	for multimode OM3
H02030V0492	BASIS V 1 HU	24	LC Duplex, ceramic sleeve, plastic housing	black	2	for multimode OM4

1.2 19" FO Patch Panels

1.2.2 BASIS V assembled

Order no.	Housing type	Number of Adaptors	Adaptor Type	Adaptor: Colour	Number of Splice Cassettes	Remarks
H02030A0554	BASIS V 1 HU	12	E2000/APC, ceramic sleeve, plastic housing	green	1	for singlemode
H02030A0594	BASIS V 1 HU	24	E2000/APC, ceramic sleeve, plastic housing	green	2	for singlemode

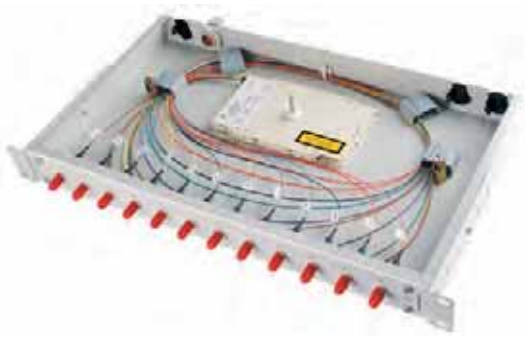

Order no.	Housing type	Number of Adaptors	Adaptor Type	Fiber Pigtails	Colour	Remarks
H02030E0000	BASIS V 1 HU	12	ST, ceramic sleeve, metal housing	12x 9/125, OS2, 2 m, ST	metal	coloured, stripped for splicing
H02030F0000	BASIS V 1 HU	12	ST, ceramic sleeve, metal housing	12x 50/125, OM2, 2 m, ST	metal	coloured, stripped for splicing
H02030K0000	BASIS V 1 HU	12	ST, ceramic sleeve, metal housing	12x 50/125, OM3, 2 m, ST	metal	coloured, stripped for splicing
H02030E0001	BASIS V 1 HU	24	ST, ceramic sleeve, metal housing	24x 9/125, OS2, 2 m, ST	metal	coloured, stripped for splicing
H02030F0001	BASIS V 1 HU	24	ST, ceramic sleeve, metal housing	24x 50/125, OM2, 2 m, ST	metal	coloured, stripped for splicing
H02030K0001	BASIS V 1 HU	24	ST, ceramic sleeve, metal housing	24x 50/125, OM3, 2 m, ST	metal	coloured, stripped for splicing

Order no.	Housing type	Number of Adaptors	Adaptor Type	Fiber Pigtails	Colour	Remarks
H02030E0008	BASIS V 1 HU	6	SC Duplex, ceramic sleeve, plastic housing	12x 9/125 OS2, 2 m, SC	blue	coloured, stripped for splicing
H02030F0008	BASIS V 1 HU	6	SC Duplex, ceramic sleeve, plastic housing	12x 50/125 OM2, 2 m, SC	beige	coloured, stripped for splicing
H02030K0008	BASIS V 1 HU	6	SC Duplex, ceramic sleeve, plastic housing	12x 50/125 OM3, 2 m, SC	aqua	coloured, stripped for splicing
H02030G0008	BASIS V 1 HU	6	SC Duplex, ceramic sleeve, plastic housing	12x 50/125 OM4, 2 m, SC	black	coloured, stripped for splicing
H02030E0009	BASIS V 1 HU	12	SC Duplex, ceramic sleeve, plastic housing	24x 9/125 OS2, 2 m, SC	blue	coloured, stripped for splicing
H02030F0009	BASIS V 1 HU	12	SC Duplex, ceramic sleeve, plastic housing	24x 50/125 OM2, 2 m, SC	beige	coloured, stripped for splicing
H02030K0009	BASIS V 1 HU	12	SC Duplex, ceramic sleeve, plastic housing	24x 50/125 OM3, 2 m, SC	aqua	coloured, stripped for splicing
H02030G0009	BASIS V 1 HU	12	SC Duplex, ceramic sleeve, plastic housing	24x 50/125 OM4, 2 m, SC	black	coloured, stripped for splicing
H02030E0034	BASIS V 1 HU	24	SC Duplex, ceramic sleeve, plastic housing	48x 9/125 OS2, 2 m, SC	blue	coloured, stripped for splicing
H02030F0034	BASIS V 1 HU	24	SC Duplex, ceramic sleeve, plastic housing	48x 50/125 OM2, 2 m, SC	beige	coloured, stripped for splicing
H02030K0034	BASIS V 1 HU	24	SC Duplex, ceramic sleeve, plastic housing	48x 50/125 OM3, 2 m, SC	aqua	coloured, stripped for splicing
H02030G0034	BASIS V 1 HU	24	SC Duplex, ceramic sleeve, plastic housing	48x 50/125 OM4, 2 m, SC	black	coloured, stripped for splicing

Order no.	Housing type	Number of Adaptors	Adaptor Type	Fiber Pigtails	Colour	Remarks
H02030E0590	BASIS V 1 HU	6	LC Duplex, ceramic sleeve, plastic housing	12x 9/125 OS2, 2 m, LC	blue	coloured, stripped for splicing
H02030F0590	BASIS V 1 HU	6	LC Duplex, ceramic sleeve, plastic housing	12x 50/125 OM2, 2 m, LC	beige	coloured, stripped for splicing
H02030K0590	BASIS V 1 HU	6	LC Duplex, ceramic sleeve, plastic housing	12x 50/125 OM3, 2 m, LC	aqua	coloured, stripped for splicing
H02030G0590	BASIS V 1 HU	6	LC Duplex, ceramic sleeve, plastic housing	12x 50/125 OM4, 2 m, LC	black	coloured, stripped for splicing
H02030E0491	BASIS V 1 HU	12	LC Duplex, ceramic sleeve, plastic housing	24x 9/125 OS2, 2 m, LC	blue	coloured, stripped for splicing
H02030F0491	BASIS V 1 HU	12	LC Duplex, ceramic sleeve, plastic housing	24x 50/125 OM2, 2 m, LC	beige	coloured, stripped for splicing
H02030K0491	BASIS V 1 HU	12	LC Duplex, ceramic sleeve, plastic housing	24x 50/125 OM3, 2 m, LC	aqua	coloured, stripped for splicing
H02030G0491	BASIS V 1 HU	12	LC Duplex, ceramic sleeve, plastic housing	24x 50/125 OM4, 2 m, LC	black	coloured, stripped for splicing
H02030E0492	BASIS V 1 HU	24	LC Duplex, ceramic sleeve, plastic housing	48x 9/125 OS2, 2 m, LC	blue	coloured, stripped for splicing
H02030F0492	BASIS V 1 HU	24	LC Duplex, ceramic sleeve, plastic housing	48x 50/125 OM2, 2 m, LC	beige	coloured, stripped for splicing
H02030K0492	BASIS V 1 HU	24	LC Duplex, ceramic sleeve, plastic housing	48x 50/125 OM3, 2 m, LC	aqua	coloured, stripped for splicing
H02030G0492	BASIS V 1 HU	24	LC Duplex, ceramic sleeve, plastic housing	48x 50/125 OM4, 2 m, LC	black	coloured, stripped for splicing

Order no.	Housing type	Number of Adaptors	Adaptor Type	Fiber Pigtails	Colour	Remarks
H02030E0554	BASIS V 1 HU	12	E2000/APC, ceramic sleeve, plastic housing	12x 9/125, OS2, 2 m, E2000/APC	green	coloured, stripped for splicing
H02030E0594	BASIS V 1 HU	24	E2000/APC, ceramic sleeve, plastic housing	24x 9/125, OS2, 2 m, E2000/APC	green	coloured, stripped for splicing

You can find the entire line of FO products in our catalogue: DataVoice Office
www.telegaertner.com

Now you can assemble FO Patch Panels online and immediately place your order inquiry using our TICNET configurator
www.telegaertner.com/ticnet

1.3 Accessories

Order no.	Short name
H10000A0000	Carrier with marking strip for 19" front plates, screw mounting

Order no.	Short name
H02025A0343	19" patch panel with 5 cable guide bars (plastic)

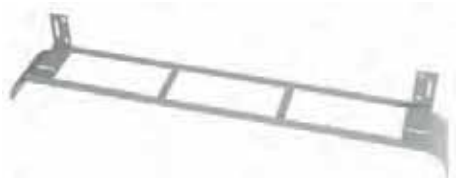

Order no.	Description
H02025A0317	Cable Management for 19" FO Patch Panel 1 HU

Order no.	Short name
H02025A0116	Cable management plate for 19" patch panels 1 HU

Order no.	Short name
B06013A0010	Cable management bar for 19" patch panels

2

Components for the Control Cabinet - RJ45/FO

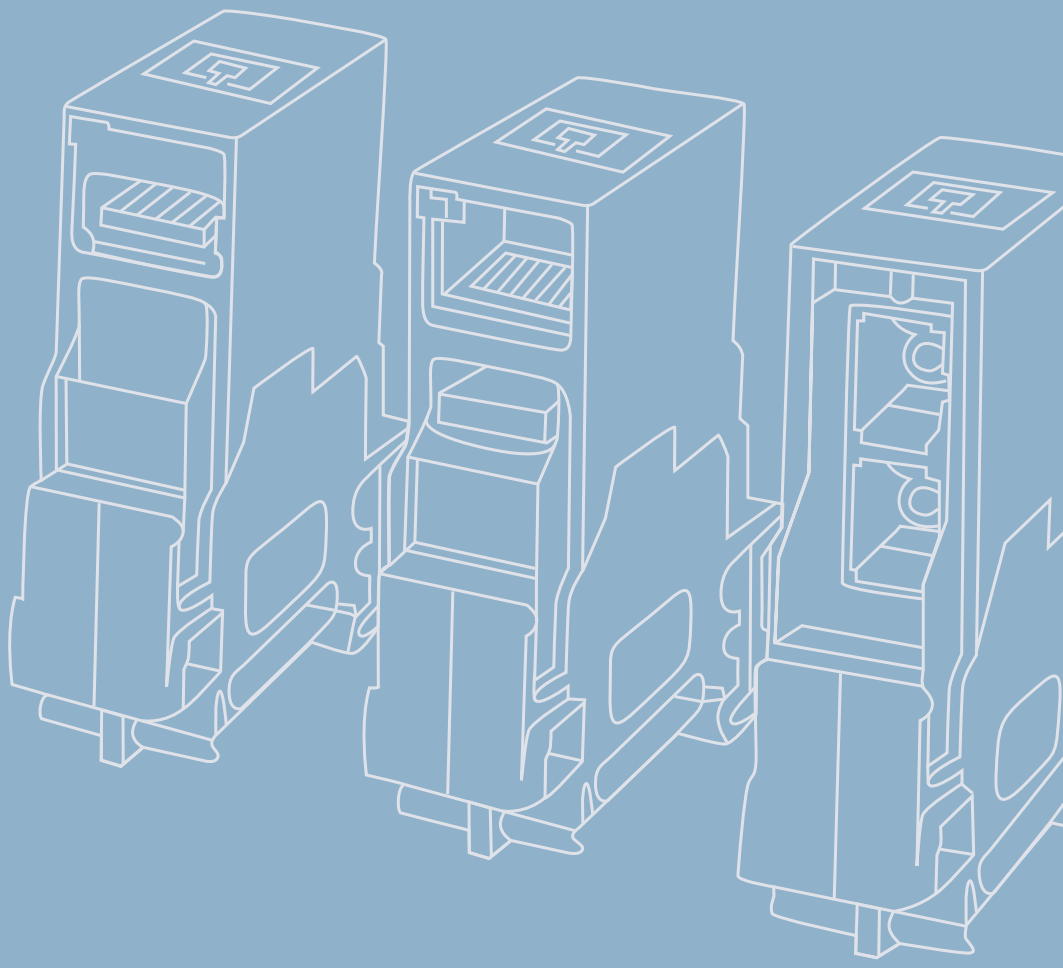

2 Components for the Control Cabinet - RJ45/FO

2.1 STX Mounting Rail Distributor 63
2.1.1 STX Mounting Rail Distributor assembled with adaptors 63
2.1.2 STX Mounting Rail Distributor assembled with adaptors and pigtails 65

2.2 STX Mounting Rail Outlets 66
2.2.1 STX Mounting Rail Outlets RJ45 67
2.2.2 STX Mounting Rail Outlets USB 67
2.2.3 STX Mounting Rail Outlets FO 68

2.3 STX Mounting Rail Distributor for AMJ-S Modules / AMJ Modules K 70

2.4 STX Mounting Rail Distributor for FO Cable-Splitter 71

2.5 Mounting Rail Outlet TS45 AMJ-S 71

For generic cabling in control cabinets, Telegärtner offers outlets and distributors which can be mounted directly next to one another on the mounting rail. They form the ideal connection between the arriving installation lines and the wiring inside the control cabinet. The components can be quickly and easily mounted on conventional TH 35 rails by simply clicking them in place.

STX mounting rail distributor 2.1

Performance Characteristics

- for up to 24 fibers
- 3 individual cable entries (top/bottom/rear)
- top hat rail mounting, 3 mounting options

Mechanical Characteristics	
Material: housing	sheet steel zinc plated, powder coated, light grey RAL 7035
Material: front plate	sheet steel zinc plated, powder coated, light grey RAL 7035
Material: top hat rail adaptor	sheet steel nickel plated
Cable entry	cable gland M20 for 5-9 mm
Panel piercings	ST Duplex, SC Duplex, LC Duplex, E2000 Compact
Dimensions in mm: Width	35 / 70
Dimensions in mm: Heigth	125
Dimensions in mm: Depth	140
Environmental Requirements	
Shock	250 ms²
Vibration sinusoidal (9 Hz - 500 Hz)	50 ms²
Protection against particulate ingress	IP2X
Protection against water / immersion	IPX0
Ambient temperature	-40° C to + 70° C
Rapid change of temperature	-40° C to + 70° C / 25 cycles t=30 min.
Climatic damp heat	+25° C / +65° C / 93% RH // -10° C / 21 cycles
Flowing mixed gas	+25°C / 73% RH / 4 days, H_2S / SO_2

STX Mounting Rail Distributor assembled with adaptors 2.1.1

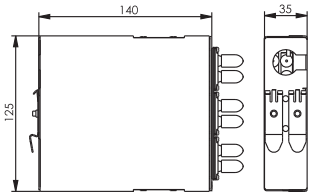

Order no.	Housing type	Adaptors	Type
H82050A0001	STX mounting rail distributor	6xST Duplex, phosphor bronze sleeve/metal housing	Multimode
H82050S0001	STX mounting rail distributor	6xST-Duplex, ceramic sleeve/metal housing	Singlemode/Multimode

2.1

2.1 STX mounting rail distributor

2.1.1 STX Mounting Rail Distributor assembled with adaptors

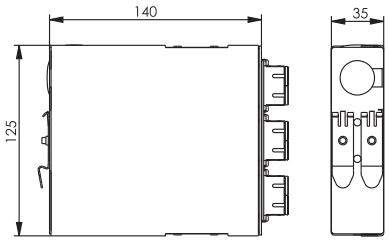

Order no.	Housing type	Adaptors	Colour	Type
H82050A0002	STX mounting rail distributor	6xSC Duplex, phosphor bronze sleeve/plastic housing	beige	Multimode
H82050S0002	STX mounting rail distributor	6xSC Duplex, ceramic sleeve/plastic housing	blue	Singlemode/Multimode
H82050S0003	STX mounting rail distributor	6xSC Duplex, ceramic sleeve/metal housing	silver	Singlemode/Multimode

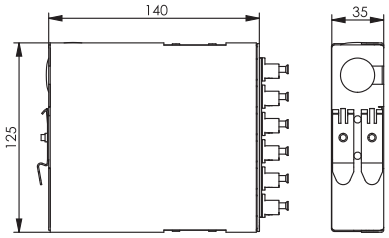

Order no.	Housing type	Adaptors	Colour	Type
H82050A0005	STX mounting rail distributor	6xLC Duplex, ceramic sleeve/plastic housing	beige	Multimode
H82050S0005	STX mounting rail distributor	6xLC Duplex, ceramic sleeve/plastic housing	blue	Singlemode/Multimode

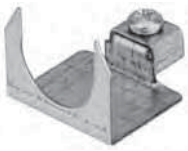

Order no.	Type
H06000A0055	Cable strain relief (bar, clamp, screw), only for loose-tube cables and mini-breakout cables

Order no.	Description	Remarks
F08000A0003	Crimp splice protector	System Telekom
F08000A0014	Crimp splice protector	System Telekom, PU = 150 pcs.
F08000A0017	Micro splice protector for shrink splice	Ø 1,3 mm, L=30 mm

STX Mounting Rail Distributor assembled with adaptors and pigtails 2.1.2

Order no.	Description	Fiber Pigtails	Remarks
H82050E0001	STX mounting rail distributor with 6xST Duplex, splice cassette, Pigtails	12x E9/125, ST	coloured*
H82050F0001	STX mounting rail distributor with 6xST Duplex, splice cassette, Pigtails	12x G50/125 OM2, ST	coloured*
H82050K0001	STX mounting rail distributor with 6xST Duplex, splice cassette, Pigtails	12x G50/125 OM3, ST	coloured*
H82050G0001	STX mounting rail distributor with 6xST Duplex, splice cassette, Pigtails	12x G50/125 OM4, ST	coloured*
H82050E0002	STX mounting rail distributor with 6xSC Duplex, splice cassette, Pigtails	12x E9/125, SC	coloured*
H82050E0003	STX mounting rail distributor with 6xSC Duplex, splice cassette, Pigtails	12x E9/125, SC	metal housing, coloured*
H82050F0002	STX mounting rail distributor with 6xSC Duplex, splice cassette, Pigtails	12x G50/125 OM2, SC	coloured*
H82050K0002	STX mounting rail distributor with 6xSC Duplex, splice cassette, Pigtails	12x G50/125 OM3, SC	coloured*
H82050G0002	STX mounting rail distributor with 6xSC Duplex, splice cassette, Pigtails	12x G50/125 OM4, SC	coloured*
H82050E0005	STX mounting rail distributor with 6xLC Duplex, splice cassette, Pigtails	12x E9/125, LC	coloured*
H82050F0005	STX mounting rail distributor with 6xLC Duplex, splice cassette, Pigtails	12x G50/125 OM2, LC	coloured*
H82050K0005	STX mounting rail distributor with 6xLC Duplex, splice cassette, Pigtails	12x G50/125 OM3, LC	coloured*
H82050G0005	STX mounting rail distributor with 6xLC Duplex, splice cassette, Pigtails	12x G50/125 OM4, LC	coloured*
H82050E0007	STX mounting rail distributor with 6x E2000 Compact, splice cassette, Pigtails	12x E9/125, E2000	coloured*
H82050F0007	STX mounting rail distributor with 6x E2000 Compact, splice cassette, Pigtails	12x G50/125 OM2, E2000	coloured*
H82050K0007	STX mounting rail distributor with 6x E2000 Compact, splice cassette, Pigtails	12x G50/125 OM3, E2000	coloured*
H82050G0007	STX mounting rail distributor with 6x E2000 Compact, splice cassette, Pigtails	12x G50/125 OM4, E2000	coloured*

* with cable strain relief; stripped for splicing

Order no.	Description	Fiber Pigtails	Remarks
H82050E0101	STX mounting rail distributor with 12x ST Duplex, splice cassette, pigtails	24x E9/125, ST	coloured*
H82050F0101	STX mounting rail distributor with 12x ST Duplex, splice cassette, pigtails	24x G50/125 OM2, ST	coloured*
H82050K0101	STX mounting rail distributor with 12x ST Duplex, splice cassette, pigtails	24x G50/125 OM3, ST	coloured*
H82050G0101	STX mounting rail distributor with 12x ST Duplex, splice cassette, pigtails	24x G50/125 OM4, ST	coloured*
H82050E0102	STX mounting rail distributor with 12x SC Duplex, splice cassette, pigtails	24x E9/125, SC	coloured*
H82050F0102	STX mounting rail distributor with 12x SC Duplex, splice cassette, pigtails	24x G50/125 OM2, SC	coloured*
H82050K0102	STX mounting rail distributor with 12x SC Duplex, splice cassette, pigtails	24x G50/125 OM3, SC	coloured*
H82050G0102	STX mounting rail distributor with 12x SC Duplex, splice cassette, pigtails	24x G50/125 OM4, SC	coloured*
H82050E0105	STX mounting rail distributor with 12x LC Duplex, splice cassette, pigtails	24x E9/125, LC	coloured*
H82050F0105	STX mounting rail distributor with 12x LC Duplex, splice cassette, pigtails	24x G50/125 OM2, LC	coloured*
H82050K0105	STX mounting rail distributor with 12x LC Duplex, splice cassette, pigtails	24x G50/125 OM3, LC	coloured*
H82050G0105	STX mounting rail distributor with 12x LC Duplex, splice cassette, pigtails	24x G50/125 OM4, LC	coloured*

* with cable strain relief; stripped for splicing

2.2 STX Mounting Rail Outlet

The STX Mounting Rail Outlets utilizing ***STEADY**TEC*® technology are available in a wide variety of applications (RJ45, USB coupler, fiber optic adaptors). The use of freely selectable modules which can be easily inserted into the housings provides a high level of flexibility in both component selection as well as in areas of application. The Variants designed for fully-screened RJ45 jacks Cat.6_A and RJ45 Couplers Cat.6 Class E_A are equipped with a functional earth which can be switched on/off during operation. This simplifies fault analyses in the grounding concept while also separating the potentials between the network and the control cabinet.

	STX Mounting Rail Outlets RJ45 Module Cat.6_A	STX Mounting Rail Outlets RJ45 Coupler Cat.6 Class E_A	STX Mounting Rail Outlets USB Coupler
Standards			
Generic cabling systems	ISO/IEC 11801; EN 50173-1; ISO/IEC 24702; IEC 61918		-
Custom-designed cabling systems	PROFINET Installation Guideline		-
Connectors	IEC 60603-7-51	IEC 60603-7-51	IEC 61076-3-107
Mounting rail TH35	DIN 60715	DIN 60715	DIN 60715
Specification for low-voltage switchgear and controlgear	DIN EN 60947-1; DIN EN 60947-7-1		-
Mechanical Characteristics			
Insertion force	≤ 30 N	≤ 30 N	≤ 66 N
Life (mating cycles RJ45, RJ12, RJ11)	≥ 750	≥ 750	≥ 1500
Material: housing / mounting rail	PA UL94 V0 grey	PA UL94 V0 grey	PA UL94 V0 grey
Material: earth contact spring	Spring steel 5-8 µm Sn on 3 µm Cu		-
Material: jack housing	zinc diecast	zinc diecast	PC UL94 V0 black
Material: housing finish	CuSnZn	nickel plated	-
Material: shield	German silver	German silver	stainless steel or phosphor bronze, min 1 µm Ni
Material: contact spring	spring steel	spring steel	Phosphor Bronze, min 1 µm Ni
Material: contact spring finish	min. 0,8 µm Au on 1,2 µm Ni		
Material: contact IDC termination	CuNi2Si	-	-
Material: IDC termination finish	min. 3-6 µm Sn	-	-
Material: cable ties	PA ZK94 V2	-	-
Cu-Conductor diameter: stranded	0.46-0.76 mm AWG 27/7 - AWG 22/7	-	-
Cu-Conductor diameter: solid	0.41-0.64 mm AWG 26/1 - AWG 22/1	-	-
Core Diameter	0.9-1.6 mm	-	-
Reusable IDC for AWG 22/1; AWG 22/7	≤4 cycles		
Reusable IDC für AWG 23/1 - AWG 26/1; AWG 24/7 - AWG 26/7	≤10 cycles	-	-
Environmental Requirements			
Climatic damp heat	+40° C / 93% RH / 7 days	+40° C / 93% RH / 7 days	+40° C / 93% RH / 7 days
Coldness	-25° C / 1 day	-25° C / 1 day	-25° C / 1 day
Ambient temperature	-40° C to + 70° C	-40° C to + 70° C	-40° C to + 70° C
Rapid change of temperature	-40° C to + 70° C / 25 cycles t=30 min.		
Flowing mixed gas	+25°C / 73% RH / 4 days, H_2S / SO_2		
Electrical Characteristics			
Current carrying capacity at 50°C	1 A	1 A	-
PoE+ acc to IEEE 802.3at	fulfilled	fulfilled	-
Transmission Characteristics			
Category 6_A	ISO/IEC 11801, DIN EN 50173-1	-	-
Class E_A (Permanent Link)	ISO/IEC 11801, DIN EN 50173-1	-	-
Class E_A (Channel)	-	ISO/IEC 11801, DIN EN 50173-1	-
10 Gigabit Ethernet acc. to IEEE 802.3an	fulfilled	fulfilled	-
Performance	-	-	Universal Serial Bus Spec. Revision 2.0/3.0

STX Mounting Rail Outlet RJ45 2.2.1

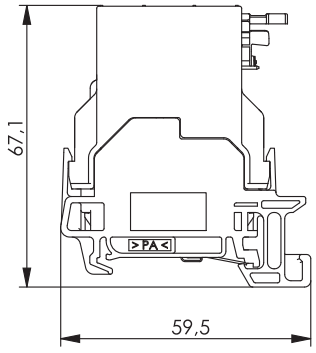

Order no.	Short name	Type	Remarks	Colour
J80023A0000	STX mounting rail outlet	incl. RJ45 jack A Cat.6$_A$ T568A	tool-free connectivity, suitable for RJ45/11/12 plugs, mounting rail TH35	light grey
J80023A0001	STX mounting rail outlet	incl. RJ45 jack B Cat.6$_A$ T568B	tool-free connectivity, suitable for RJ45/11/12 plugs, mounting rail TH35	light grey
J80023A0002	STX mounting rail outlet	incl. RJ45 jack P Cat.6$_A$ PROFINET	tool-free connectivity, suitable for RJ45/11/12 plugs, mounting rail TH35	light grey

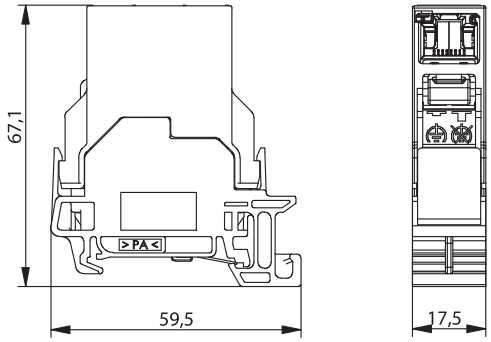

Order no.	Short name	Type	Remarks	Colour
J80023A0003	STX mounting rail outlet	incl. RJ45 coupler Cat.6, suitable for Class E$_A$ Channel	suitable for RJ45/11/12 plugs, mounting rail TH35	light grey

STX Mounting Rail Outlet USB 2.2.2

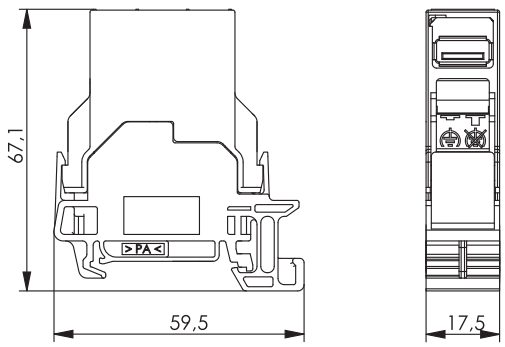

Order no.	Short name	Type	Remarks	Colour
J80023A0004	STX mounting rail outlet	incl. USB 2.0 coupler type A f-f	for mounting rail TH35	light grey
J80023A0006	STX mounting rail outlet	incl. USB 2.0 coupler type A-B f-f	for mounting rail TH35	light grey
J80023A0007	STX mounting rail outlet	incl. USB 3.0 coupler type A f-f	for mounting rail TH35	light grey

2.2 STX Mounting Rail Outlet

	STX Mounting Rail Outlets with SC Duplex Adaptor	STX Mounting Rail Outlets with LC Duplex Adaptor	STX Mounting Rail Outlets with E2000 Adaptor
Standards			
Generic cabling systems	ISO/IEC 11801; EN 50173-1; ISO/IEC 24702; IEC 61918		
Connectors	IEC 61754-4	IEC 61754-20	IEC 61754-15
Mechanical Characteristics			
Insertion force	≤ 30 N	≤ 30 N	≤ 30 N
Durability (mating cycles)	≥ 1000	≥ 1000	≥ 1000
Material: housing / mounting rail	PA UL94 V0 grey	PA UL94 V0 grey	PA UL94 V0 grey
Material: insert for adaptor	aluminium sheet anodised	aluminium sheet anodised	aluminium sheet anodised
Material: adaptor housing	PC UL94 V0	PEI UL94 VOPEI UL94 VO grey	plastic
Material: adaptor split sleeve	Singlemode: ceramics; Multimode: phosphor bronze	Singlemode: ceramics; Multimode: phosphor bronze	Singlemode: ceramics; Multimode: phosphor bronze
Material: protection cap	TPE UL94 V0	PP	plastic
Environmental Requirements			
Shock	250 ms²	250 ms²	250 ms²
Vibration sinusoidal (9 Hz - 500 Hz)	50 ms²	50 ms²	50 ms²
Protection against particulate ingress	IP2X	IP2X	IP2X
Protection against water / immersion	IPX0	IPX0	IPX0
Climatic damp heat		+40° C / 93% RH / 7 days	
Coldness	-25° C / 1 day	-25° C / 1 day	-25° C / 1 day
Ambient temperature	-40° C to + 70° C	-40° C to + 70° C	-40° C to + 70° C
Rapid change of temperature	-40° C to + 70° C / 25 cycles t=30 min.		
Flowing mixed gas	+25°C / 73% RH / 4 days, H_2S / SO_2		
Optical Characteristics			
Insertion loss	Singlemode: max. 0.5 dB; Multimode: max. 0.4 dB	Singlemode: max. 0.5 dB; Multimode: max. 0.4 dB	Singlemode: max. 0.4 dB; Multimode: max. 0.4 dB; APC: max. 0,1 dB
Return loss	min. 40 dB	min. 40 dB	Singlemode: min. 50 dB; Multimode: min. 40 dB; APC: min. 85 dB
Design for POF	yes	no	no

2.2.3 STX Mounting Rail Outlet FO

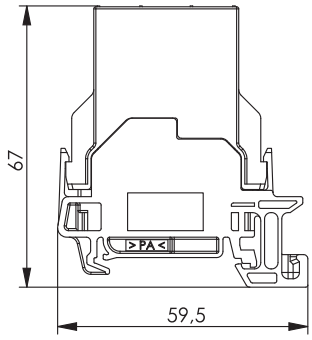

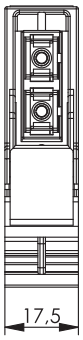

Order no.	Description	Type
H82000A0014	STX mounting rail outlet incl. SC Duplex adaptor	Multimode
H82000A0015	STX mounting rail outlet incl. SC Duplex adaptor	Singlemode

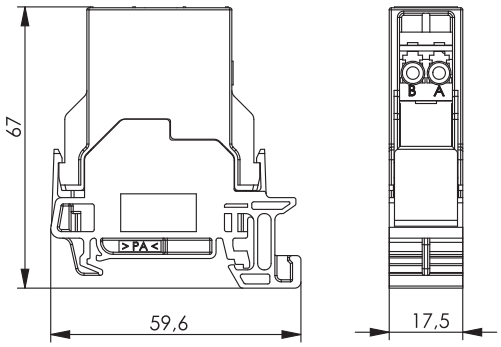

Order no.	Description	Type
H82000A0018	STX mounting rail outlet incl. LC Duplex adaptor	Multimode
H82000A0019	STX mounting rail outlet incl. LC Duplex adaptor	Singlemode

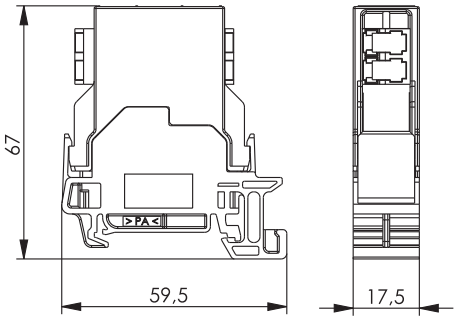

Order no.	Description	Type
H82000A0020	STX mounting rail outlet incl. E2000 Compact RJ	Multimode
H82000A0021	STX mounting rail outlet incl. E2000 Compact RJ	Singlemode
H82000A0024	STX mounting rail outlet incl. E2000/APC Compact RJ	Singlemode

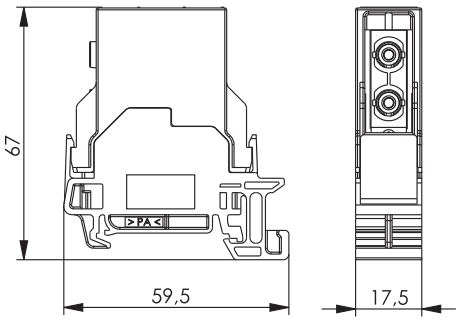

Order no.	Description	Type
H82000A0022	STX mounting rail outlet incl. ST/SC Duplex adaptor	Singlemode/Multimode

2.2 STX Mounting Rail Outlet

2.2.3 STX Mounting Rail Outlet FO

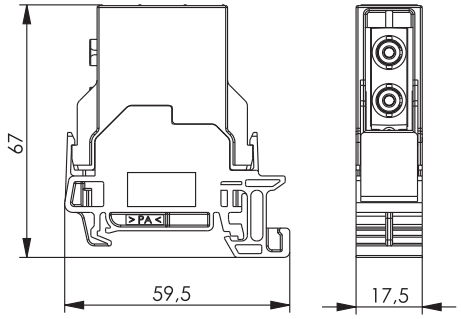

Order no.	Description	Type
H82000A0023	STX mounting rail outlet incl. ST Duplex adaptor	Singlemode/Multimode; metal

2.3 STX Mounting Rail Adaptor for AMJ-S Modules / AMJ Modules K

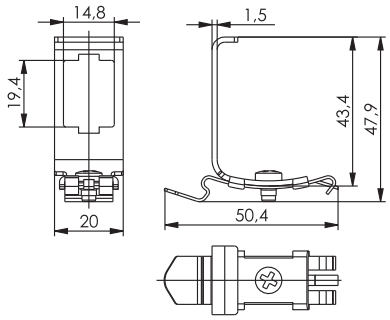

Order no.	Short name	Type	Remarks	Series
H06000B0045	Mounting rail adaptor	metal, without Module/Coupler	for mounting rail TH35	AMJ-S; AMJ Module K; AMJ Coupler K; UMJ Module K; UMJ Coupler K

STX Mounting Rail Distributor for FO Cable-Splitter 2.4

The STX mounting rail fixing brackets serve as a retainer for factory-assembled loose-tube cables with Telegärtner ODS-Mini splitters for 4 - 24 fibers. By means of grommets it is easily possible to mount several types of cable splitters on site onto the mounting rail. Ready-to-install fiber optic links therefore can be introduced into a cabinet and fixed for connecting to electronic equipment or installation into the STX mounting rail distributors.

Performance Characteristics

- for fixing ODS-Mini splitters onto DIN rail TH35 acc. to DIN 60715
- suitable for ODS-Mini splitters for 4-24 fibers
- mounting in 90° steps
- material: stainless steel

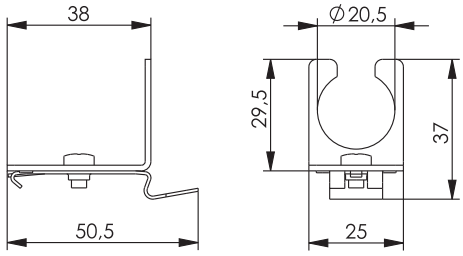

Order no.	Description	Type	Remarks
H06000A0065	STX mounting rail distributor for cable-splitter ODS-Mini	stainless steel	for TH35, mounting in 90° steps

Mounting Rail Outlet TS45 AMJ-S 2.5

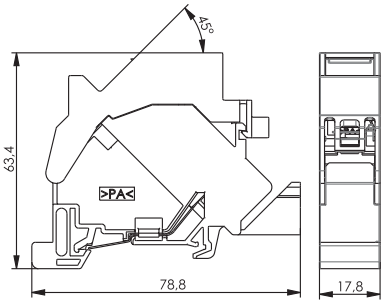

Cat.6A
AMJ-S
REAL-TIME RE-EMBEDDED

Order no.	Short name	Type	Remarks	Colour
J00023A0205	Mounting Rail Outlet TS45 AMJ-S	incl. AMJ-S Module Cat.6_A T568A	for mounting rail TH35	light grey RAL 7035
J00023A0206	Mounting Rail Outlet TS45 AMJ-S	incl. AMJ-S Module Cat.6_A T568B	for mounting rail TH35	light grey RAL 7035

3

Components for Field Cabling - M12/RJ45/FO

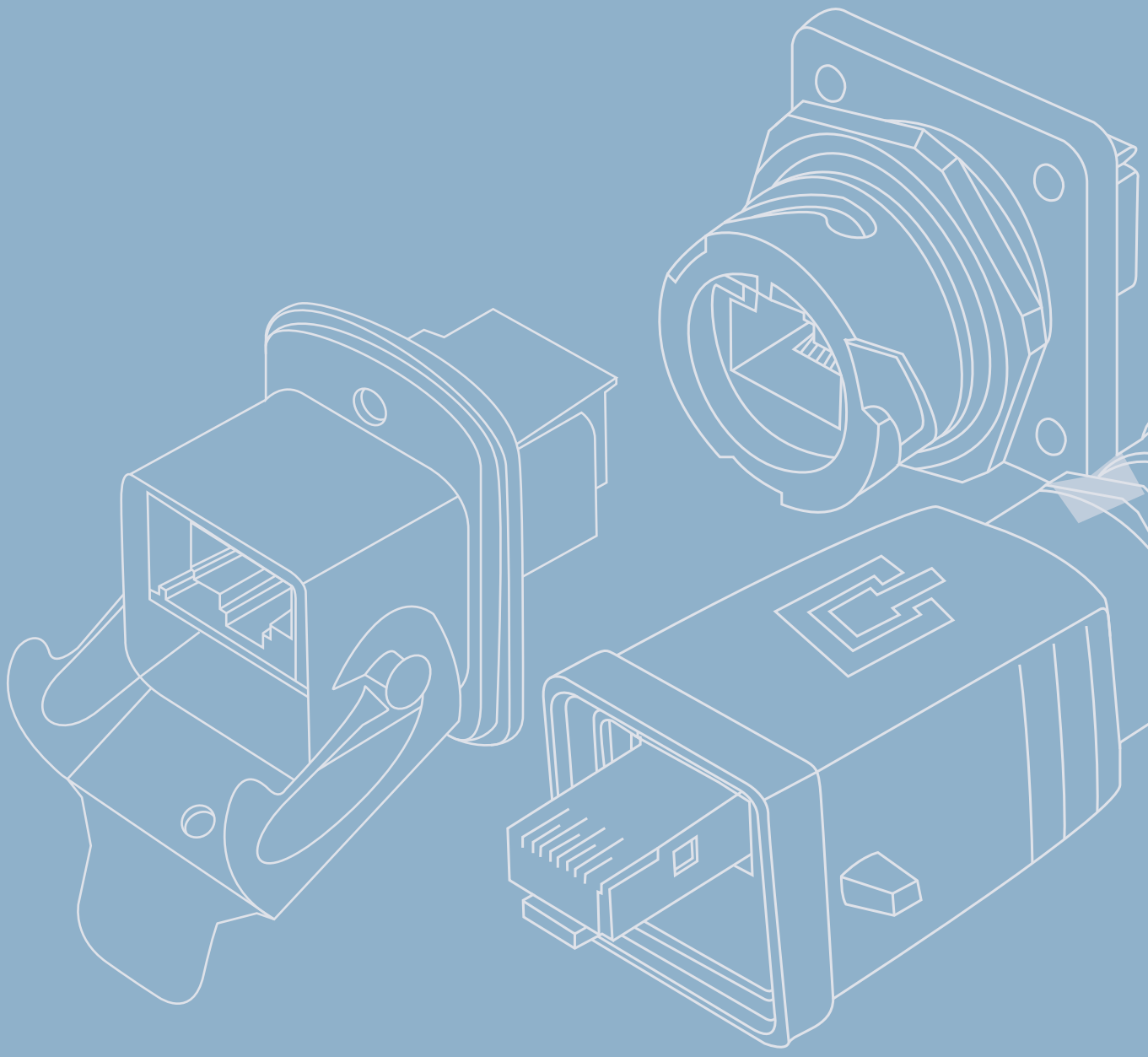

3 Components for Field Cabling - M12/RJ45/FO

3.1 M12x1 D-coded 78
3.1.1 M12x1 D-coded Cable Plug 78
3.1.2 M12x1 D-coded Bulkhead Socket 79

3.2 M12x1 X-coded 81
3.2.1 M12x1 X-coded Cable Plug 81
3.2.2 M12x1 X-coded Bulkhead Socket 82
3.2.3 M12x1 X-coded Coupler 84

3.3 VM-Pro 8-8 Class F_A IP67 86

3.4 Variant 1 87
3.4.1 RJ45 Plug Sets Variant 1 88
3.4.2 FO Plug Sets Variant 1 90
3.4.3 RJ45 Plug Inserts Variant 1 91
3.4.4 FO Plug Inserts 2SC Variant 1 93
3.4.5 FO Plug Inserts LC Duplex Variant 1 94
3.4.6 Plug Housings Variant 1 94
3.4.7 Protection Cap for Plug Variant 1 95
3.4.8 RJ45 Bulkhead Sets Variant 1 96
3.4.9 FO Bulkhead Sets Variant 1 97
3.4.10 RJ45 Bulkhead Inserts Variant 1 98
3.4.11 FO Bulkhead Inserts 2SC/SC-RJ Variant 1 99
3.4.12 FO Bulkhead Inserts LC Duplex Variant 1 100
3.4.13 Bulkhead Housings Variant 1 100
3.4.14 Protection Cap for Bulkhead Variant 1 101
3.4.15 Outlets with Bulkhead Variant 1 101

3.5 Variant 4 104
3.5.1 RJ45 Plug Sets Variant 4 105
3.5.2 FO Plug Sets Variant 4 105
3.5.3 RJ45 Plug Inserts Variant 4 106
3.5.4 FO Plug Inserts 2SC Variant 4 107
3.5.5 FO Plug Inserts LC Duplex Variant 4 108
3.5.6 Plug Housings Variant 4 108
3.5.7 Protection Cap for Plug Variant 4 109
3.5.8 RJ45 Bulkhead Sets Variant 4 109
3.5.9 FO Bulkhead Sets Variant 4 110
3.5.10 RJ45 Bulkhead Inserts Variant 4 110
3.5.11 FO Bulkhead Inserts 2SC/SC-RJ Variant 4 112
3.5.12 FO Bulkhead Inserts LC Duplex Variant 4 113
3.5.13 Bulkhead Housings Variant 4 113
3.5.14 Protection Cap for Bulkhead Variant 4 114
3.5.15 Outlets with Bulkhead Variant 4 114

3.6 Variant 5 117
3.6.1 RJ45 Plug Sets Variant 5 117
3.6.2 RJ45 Plug Inserts Variant 5 118
3.6.3 Plug Housings Variant 5 119
3.6.4 Protection Cap for Plug Variant 5 120
3.6.5 RJ45 Bulkhead Sets Variant 5 120
3.6.6 RJ45 Bulkhead Inserts Variant 5 121
3.6.7 Bulkhead Housings Variant 5 122
3.6.8 Protection Cap for Bulkhead Variant 5 123
3.6.9 Outlets with Bulkhead Variant 5 123

3.7 Variant 6 125
3.7.1 RJ45 Plug Sets Variant 6 126
3.7.2 Bulkhead Sets Variant 6 126
3.7.3 Bulkheads IP67 Variant 6 127
3.7.4 STX V6 Outlet Cat.6 127
3.7.5 RJ45 and FO Outlet IP66 Surface Mounting 130

3.8 Variant 14 132
3.8.1 RJ45 Plug Sets Variant 14 133
3.8.2 FO Plug Sets Variant 14 133
3.8.3 RJ45 Plug Inserts Variant 14 134
3.8.4 FO Plug Inserts Variant 14 134
3.8.5 Protection Cap for Plug Variant 14 135
3.8.6 RJ45 Bulkhead Sets Variant 14 135
3.8.7 FO Bulkhead Sets Variant 14 137
3.8.8 RJ45 Bulkhead Inserts Variant 14 138
3.8.9 FO Bulkhead Inserts Variant 14 139
3.8.10 Protection Cap for Bulkhead Variant 14 139

3.9 2SC IP67 140
3.9.1 FO Connector 2xSC IP67 140
3.9.2 FO Flange Coupler 2xSC IP67 141
3.9.3 RJ45 and FO Outlet IP66 Surface Mounting 142

3.10 STX Communication Interface IP65 143

3.11 FO Wall Boxes and Splice Boxes 145
3.11.1 FO Wall Distributor 145
3.11.2 FO Wall Splice Box 146
3.11.3 FO Combi Wall Box 146
3.11.4 FO Mini Wall Distributor 147
3.11.5 FO Compact Splice Box 147
3.11.6 FO Splice Box IP66 148
3.11.7 Accessories for FO Splice Box IP66 148
3.11.8 ODB 54 with assembled adaptors and pigtails 149
3.11.9 ODB 54 - TICNET 150
3.11.10 SAM - Splice Arranged Management ODB 54 150
3.11.11 Accessories for ODB 54 150
3.11.12 Distribution Plates for FO Wall Distributors and FO Splice Boxes 152

Modern industrial and building wiring envisions linking the office network with the manufacturing network andits subordinate production cells and machinery. The applicable standard for this, ISO/IEC 24702 resp. EN 50173-1 and -3, are intended for situations with a high level of bidirectional traffic between the administration and manufacturing areas whereby realtime transmissions with high security, 100% availability and simultaneous high investment security must all be guaranteed.

The increasing interconnection of machinery, equipment and measuring instruments in the production area using connectors already known from office wiring applications demands that these be adapted to the higher stresses presented by the contamination-prone, rough industrial environment. Aside from a variety of RJ45, IP67 M12 D- and X-coded connectors, Telegärtner therefore also offers designs for connecting glass and polymer fibers in order to meet this challenge.

Type	Norm	Status	Description
RJ45 AWG24	IEC 60603-7-51	Norm	8 pole Modular Connector Cat.6_A
RJ45 AWG22	IEC 60603-7-5	Norm	8 pole Modular Connector Cat.6
SC-RJ	IEC 61754-24	Norm	SFF connector, Push-Pull
SC	IEC 61754-4	Norm	SC Push-Pull
LC	IEC 61754-20	Norm	SFF connector, latch
ST	IEC 61754-2	Norm	bayonet locking
M12-D	IEC 61076-2-101	Norm	M12, 4 pole with D-coding IP67
M12-X	IEC 61076-2-109	Norm	M12, 8 pole with X-coding IP67
Var. 1	IEC 61076-3-106	Norm	Circular bayonet locking
Var. 4	IEC 61076-3-106	Norm	Push-pull IP67
Var. 5	IEC 61076-3-106	Norm	Locking lever coupling IP67
Var. 6	IEC 61076-3-106	Norm	Push-pull locking IP67
Var. 14	IEC 61076-3-117	Norm	Push-pull IP67

Type	ISO/IEC 24702	IEC 61918	EN 50173-3
	Generic Cabling Systems - Industrial Premises	Industrial Communication Networks	Generic Cabling Systems - Industrial Premises
RJ45 AWG24 Cat.6_A	●	●	●
RJ45 AWG22 Cat.6 Class E_A	●		●
SC-RJ	●*	●	●*
SC	●	●	●*
LC	●	●	●
ST	●	●	●*
M12-D	●	●	●
M12-X	●	●	●
Var. 1	●*	●	●*
Var. 4	●		●
Var. 5			
Var. 6	●*	●	●*
Var. 14		●	●*

* reference to IEC 61918

Type	Ethernet TCP/IP	ODVA	PNO AIDA	CLPA
	Ethernet TCP/IP	Ethernet IP	PROFINET	CC-Link IE
RJ45 AWG24 Cat.6_A	●			●
RJ45 AWG22 Cat.6 Class E_A	●			●
SC-RJ	●		●	
SC	●		●	
LC	●	●	●	●
ST	●			
M12-D		●	●	
M12-X		●	●	●
Var. 1		●		
Var. 4				
Var. 5			●	
Var. 6				
Var. 14			●	

Components for Field Cabling - M12/RJ45/FO

	Plug Housings V1 Metal	Plug Housings V1 Plastic	Plug Housings V4	Plug Housings V5	Plug Housings V14
Standards					
Connectors	IEC 61076-3-106	IEC 61076-3-106	IEC 61076-3-106	IEC 61076-3-106	IEC 61076-3-117
Degrees of protection provided by enclosures (IP code)	IEC 60529	IEC 60529	IEC 60529	IEC 60529	IEC 60529
Mechanical Characteristics					
Housing	zinc diecast, nickel-plated	PA UL94 V0 black halogenfree	PA UL94 V0 black halogenfree	aluminium diecast, powder coated	zinc diecast, nickel plated
Cable diameter	5.0 - 10 mm	5.0 - 10 mm	5.0 - 10 mm	5.0 - 10 mm	5.0 - 10 mm
Environmental Requirements					
Protection against particulate ingress	IP6X	IP6X	IP6X	IP6X	IP6X
Protection against water / immersion	IPX7	IPX7	IPX7	IPX7	IPX7
Ambient temperature	-40° C to + 70° C				
Rapid change of temperature	-40° C to + 70° C / 25 cycles t=30 min.				
Climatic damp heat	+25° C / +65° C / 93% RH // -10° C / 21 cycles				
Neutral salt spray test	+35° C / 4 days; 5% NaCl				

	Bulkhead V1 Metal	Bulkhead V1 Plastic	Bulkhead V4	Bulkhead V5	Bulkhead V14
Standards					
Connectors	IEC 61076-3-106	IEC 61076-3-106	IEC 61076-3-106	IEC 61076-3-106	IEC 61076-3-117
Degrees of protection provided by enclosures (IP code)	IEC 60529	IEC 60529	IEC 60529	IEC 60529	IEC 60529
Mechanical Characteristics					
Clamp	-	-	-	Stainless steel	-
Housing	zinc diecast, nickel plated	PA UL94 V0 black halogenfree	PA UL94 V0 black halogenfree	aluminium diecast, powder coated	zinc diecast, nickel plated
Environmental Requirements					
Protection against particulate ingress	IP6X	IP6X	IP6X	IP6X	IP6X
Protection against water / immersion	IPX7	IPX7	IPX7	IPX7	IPX7
Ambient temperature	-40° C to + 70° C				
Rapid change of temperature	-40° C to + 70° C / 25 cycles t=30 min.				
Climatic damp heat	+25° C / +65° C / 93% RH // -10° C / 21 cycles				
Neutral salt spray test	+35° C / 4 days; 5% NaCl				

Technical data apply to Telegärtner products and the appropriate combinations of IP67 plugs and bulkheads.

Industrial requirements for secure and continuous transfer of constantly increasing data volumes demand cabling solutions which are able to satisfy the needs of today and the future. The cabling of industrial communication networks in accordance with IEC 61918 also provides 4- and 8-pole versions of the M12x1 round connector as a plug interface.
The 4-pole M12x1 D-coded round connectors are standardised in accordance with IEC 61076-2-101 and enable data rates up to 100 Mbit/s. They can be used for installations in the PROFINET environment. For even higher data rates up to 10 Gbit/s the round connector is standardised as an 8-pole version M12x1 with X-coding in accordance with 61076-2-109. This version also enables a power supply to connected terminating equipment in accordance with IEEE 802.3at. This allows applications such as security or video surveillance (CCTV), passenger information systems (PIS), production systems or production monitoring with high-resolution cameras to be implemented.
Telegärtner offers M12x1 D-coded and X-coded connectors, bulkhead sockets for PCBs and pre-assembled connecting cables for transfer of 1/100 Mbit/s or 1/10 Gbit/s with UL listing for installation of industrial communication networks. With field-assembly version of the new M12x1 X-coded Cat.6_A connector, networks can be set up flexible on site without special tools. The connector offers 360° shield contacting and is suitable both for connection to solid conductors and stranded cables. Both S/FTP and SF/UTP types with a wire diameter of 0.9–1.6 mm and an external diameter of 5.5–9 mm can be used for the connection. As printed circuit board receptacle types with housings for front or rear panel assembly, they are also available without housing and with a quad screen connection to the printed circuit board. The interface therefore offers component manufacturers various options for integration of their products. Telegärtner also offers pre-assembled connecting cables for the connection between machine or other terminating equipment as well as connection of the machine or terminating device in the switch cabinet. They have SF/UTP 2x2xAWG 22/7 PUR structure in accordance with the PROFINET specification for the M12x1 D-coded. The connecting cables with M12x1 X-coded have a S/FTP 4x2xAWG 26/7 PUR structure and increased temperature range of -40° to + 85°C.

Nomenclature M12x1

Example: CO-8X-180-8X-180-C6A000

1 2 3 4 5 6

1	2 = Interface side 1	3 = Design side 1
CO Coupler	8X M12x1 X-coded 4D M12x1 D-coded	180 straight, 180°

4 = Interface side 2	5 = Design side 2	6 = Category
8X M12x1 X-coded 4D M12x1 D-coded 45 RJ45	180 straight, 180° 090 angled, 90°	C5 Cat.5 C6A Cat.6_A

Example: BS-8X-180-1-4-THR-100BM-000

1 2 3 4 5 6 7 8

1 = Type	2 = Coding	3 = Design	4 = Setup
BS Bulkhead socket CP Cable plug	8X M12x1 X-coded 4D M12x1 D-coded	180 straight, 180° 090 angled, 90°	0 without housing 1 1 pc. design 2 2 pc. design 3 plug set

5 = Screen	6 = Connection	7 = Gap to PCB	8 = Mounting type
1 connection single 3 connection triple 4 connection quad 5 360° shielding	THR solder connection IDC IDC SMD SMD SCT screw termination	gap to PCB / plug length in 1/10 mm	FM front mounting BM back mounting FA field assembly

3.1 M12x1 D-coded

3.1.1 M12x1 D-coded Cable Plug

Standards	
Connectors	IEC 61076-2-101
Mechanical Characteristics	
Insertion force	≤ 30 N
Durability (mating cycles)	≥ 100
Material: housing	zinc diecast nickel plated / brass nickel plated
Material: contact body	PA
Material: shield	German silver
Material: pressure screw	brass nickel plated
Material: contacts	brass
Material: contact finish	Au over Ni
Cu-Conductor diameter: solid	0.51 - 1.0 mm (AWG24-18/1)
Cable diameter	5.0 - 8.0 mm
Environmental Requirements	
Shock	50 g
Protection against particulate ingress	IP6X
Protection against water / immersion	IPX7
Ambient temperature	-40° C to +85° C
Electrical Characteristics	
Contact resistance	≤ 3 mΩ
Insulation resistance	≥ 100 MΩ
Voltage proof: contact-contact	≥ 1000 V, DC
Voltage proof: contact-shield	≥ 1000 V, DC
Transmission Characteristics	
Fast Ethernet acc. to IEEE 802.3	fulfilled
Category 5	ISO/IEC 11801, DIN EN 50173-1

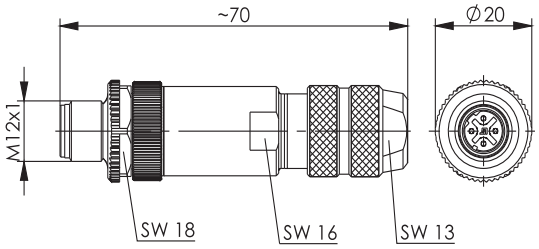

Order no.	Description	Short name	Type
J80026A0200	STX M12x1 KS D-cod. Cat.5	CP4D180-3-5SCT700FA000	4-pole, D-coded, straigth, plug set, 360° shielding, screw termination, length of connector: 70 mm, field assembly

M12x1 D-coded Bulkhead Socket

Standards	
Connectors	IEC 61076-2-101
Mechanical Characteristics	
Insertion force	≤ 30 N
Durability (mating cycles)	≥ 100
Material: housing	zinc diecast nickel plated / brass nickel plated
Material: contact body	PA
Material: contacts	CuSn
Material: contact finish	Au over Ni
Environmental Requirements	
Shock	50 g
Protection against particulate ingress	IP6X
Protection against water / immersion	IPX7
Ambient temperature	-40° C to +85° C
Electrical Characteristics	
Contact resistance	≤ 5 mΩ
Insulation resistance	≥ 100 MΩ
Voltage proof: contact-contact	≥ 500 V, DC
Voltage proof: contact-shield	≥ 500 V, DC
Transmission Characteristics	
Fast Ethernet acc. to IEEE 802.3	fulfilled
Category 5	ISO/IEC 11801, DIN EN 50173-1

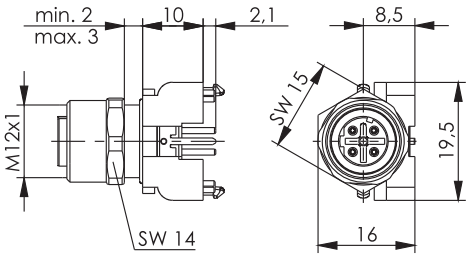

Order no.	Description	Short name	Type	Mount. dim.
J80120A0220	STX M12x1 BS D-cod. Cat.5	BS4D180-2-1THR100BM000	4-pole, D-coded, straight, 1pc. design, screen connection quad, solder connection THR, gap to PCB 10 mm, back mounting	Z138; Z143

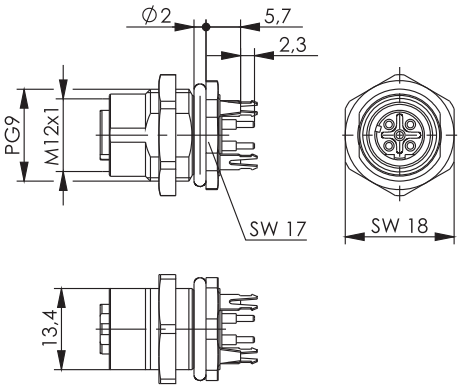

Order no.	Description	Short name	Type	Mount. dim.
J80020A0221	STX M12x1 BS D-cod. Cat.5	BS4D180-1-4THR057BM000	4-pole, D-coded, straight, 1pc. design, screen connection quad, solder connection THR, gap to PCB 5.7 mm, back mounting	Z144; Z145

3.1 M12x1 D-coded

3.1.2 M12x1 D-coded Bulkhead Socket

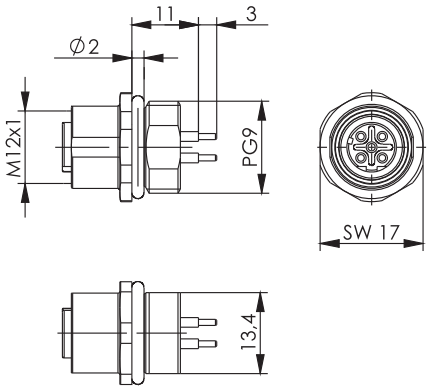

Order no.	Description	Short name	Type	Mount. dim.
J80020A0222	STX M12x1 BS D-cod. Cat.5	BS4D180-1-5THR110FM000	4-pole, D-coded, straight, 1pc. design, screen connection 360°, solder connection THR, gap to PCB 11 mm, front mounting	Z146; Z147; Z148

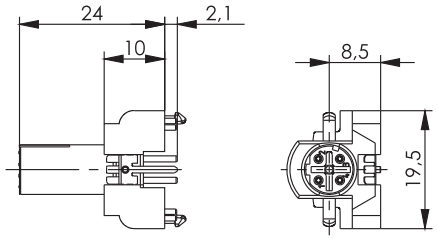

Order no.	Description	Short name	Type	Mount. dim.
J80220A0220	STX M12x1 BS D-cod. Cat.5	BS4D180-0-1THR000BM000	4-pole, D-coded, straight, without housing, screen connection single, solder connection THR, back mounting	Z143

M12x1 X-coded 3.2

M12x1 X-coded Cable Plug 3.2.1

Standards	
Connectors	IEC 61076-2-109
Mechanical Characteristics	
Insertion force	≤ 30 N
Durability (mating cycles)	≥ 100
Material: housing	zinc diecast nickel plated / brass nickel plated
Material: wire pair presorting	PA UL94 V0
Material: shield	German silver
Material: pressure screw	brass nickel plated
Material: contacts	brass
Material: contact finish	Au over Ni
Insulation diameter	0.9 - 1.6 mm
Cu-Conductor diameter: stranded	0.46 - 0.76 mm (AWG27 - 22/7)
Cu-Conductor diameter: solid	0.51 - 0.64 mm (AWG24 - 22/1)
Cable diameter	5.5 - 9.0 mm
Environmental Requirements	
Shock	50 g
Protection against particulate ingress	IP6X
Protection against water / immersion	IPX7
Ambient temperature	-40° C to +85° C
Electrical Characteristics	
Contact resistance	≤ 10 mΩ
Insulation resistance	≥ 100 MΩ
Voltage proof: contact-contact	≥ 500 V, DC
Voltage proof: contact-shield	≥ 500 V, DC
PoE+ acc to IEEE 802.3at	Adequate for Power over Ethernet+
Transmission Characteristics	
10 Gigabit Ethernet acc. to IEEE 802.3an	Adequate for 10 Gigabit Ethernet
Category 6_A	ISO/IEC 11801; DIN EN 50173-1
Class E_A	ISO/IEC 11801; DIN EN 50173-1
Category 6A	ANSI/TIA/EIA-568-C.2

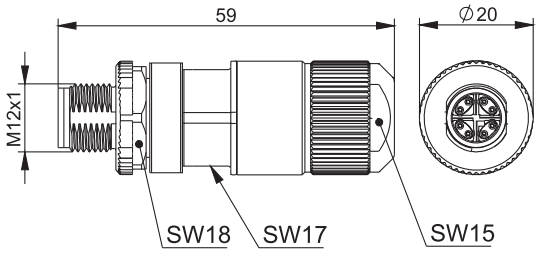

Order no.	Description	Short name	Type
J80026A0100	STX M12x1 CP X-cod. Cat.6_A	CP8X180-3-5IDC590FA000	8-pole, X-coded, straight, plug set, 360° shielding, IDC, plug length: 59 mm, field assembly

3.2 M12x1 X-coded

3.2.2 M12x1 X-coded Bulkhead Socket

Standards	
Connectors	IEC 61076-2-109
Mechanical Characteristics	
Insertion force	≤ 30 N
Durability (mating cycles)	≥ 100
Material: housing	zinc diecast nickel plated / brass nickel plated
Material: contact body	PA
Material: contacts	CuSn
Material: contact finish	Au
Material: gaskets	FKM; NBR
Environmental Requirements	
Shock	50 g
Protection against particulate ingress	IP6X
Protection against water / immersion	IPX7
Ambient temperature	-40° C to +85° C
Electrical Characteristics	
Contact resistance	≤ 5 mΩ
Insulation resistance	≥ 100 MΩ
Voltage proof: contact-contact	≥ 500 V, DC
Voltage proof: contact-shield	≥ 500 V, DC
PoE+ acc to IEEE 802.3at	Adequate for Power over Ethernet+
Transmission Characteristics	
10 Gigabit Ethernet acc. to IEEE 802.3an	Adequate for 10 Gigabit Ethernet
Category 6_A	ISO/IEC 11801; DIN EN 50173-1
Class E_A	ISO/IEC 11801; DIN EN 50173-1
Category 6A	ANSI/TIA/EIA-568-C.2

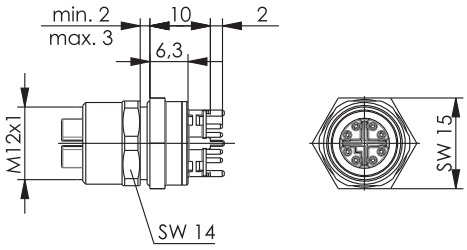

Order no.	Description	Short name	Type	Mount. dim.
J80020A0120	STX M12x1 BS X-cod. Cat.6_A	BS8X180-1-4THR100BM000	8-pole, X-coded, straight, 1pc. design, screen connection quad, solder connection THR, gap to PCB 10 mm, back mounting	Z138; Z139

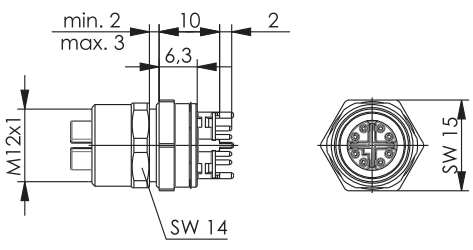

Order no.	Description	Short name	Type	Mount. dim.
J80120A0120	STX M12x1 BS X-cod. Cat.6_A	BS8X180-2-4THR100BM000	8-pole, X-coded, straight, 2pc. design, screen connection quad, solder connection THR, gap to PCB 10 mm, back mounting	Z138; Z139

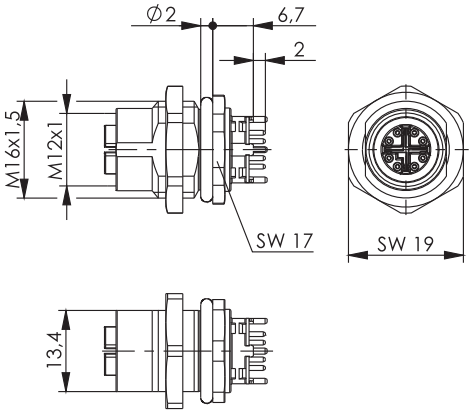

Order no.	Description	Short name	Type	Mount. dim.
J80020A0121	STX M12x1 BS X-cod. Cat.6$_A$	BS8X180-1-4THR067BM000	8-pole, X-coded, straight, 1pc. design, screen connection quad, solder connection THR, gap to PCB 6,7 mm, back mounting	Z139; Z140

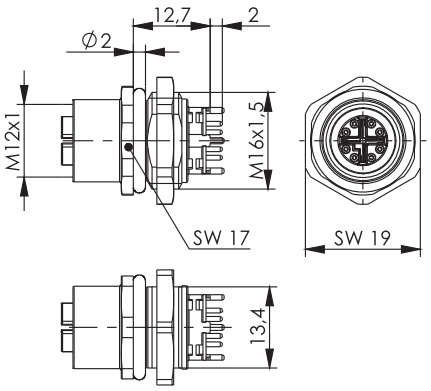

Order no.	Description	Short name	Type	Mount. dim.
J80020A0122	STX M12x1 BS X-cod. Cat.6$_A$	BS8X180-1-4THR127FM000	8-pole, X-coded, straight, 1pc. design, screen connection quad, solder connection THR, gap to PCB 12,7 mm, front mounting	Z139; Z141; Z142

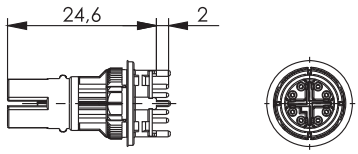

Order no.	Description	Short name	Type	Mount. dim.
J80220A0120	STX M12x1 BS X-cod. Cat.6$_A$	BS8X180-0-4THR000BM000	8-pole, X-coded, straight, without housing, screen connection quad, solder connection THR, , gap to PCB customized, back mounting	Z139

3.2 M12x1 X-coded

3.2.2 M12x1 X-coded Bulkhead Socket

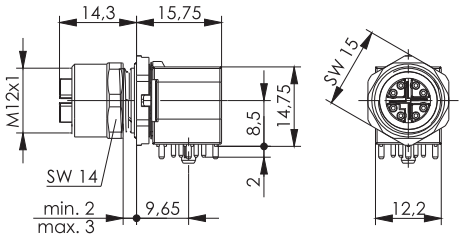

Order no.	Description	Short name	Type	Mount. dim.
J80320A0120	STX M12x1 EBB X-cod. Cat.6$_A$ 90°	BS8X090-1-4THR085BM000	8-pole, X coded, angled, 1 pc. design, screen connection quad, solder connection THR, 8,5 mm gap to PCB, back mounting	Z138; Z158
J80420A0120	STX M12x1 EBB X-cod. Cat.6$_A$ 90°	BS8X090-2-4THR085BM000	8-pole, X coded, angled, 2 pc. design, screen connection quad, solder connection THR, 8,5 mm gap to PCB, back mounting	Z138; Z158
J80520A0120	STX M12x1 EBB X-cod. Cat.6$_A$ 90°	BS8X090-0-4THR085BM000	8-pole, X-coded, angled, without housing, screen connection quad, solder connection THR, customized back mounting	Z159

3.2.3 M12x1 X-coded Coupler

	M12 X-coded Bulkhead Socket	RJ45 Jack
Standards		
Connectors	IEC 61076-2-109	IEC 60603-7-51
Mechanical Characteristics		
Insertion force	≤ 30 N	≤ 30 N
Durability (mating cycles)	≥ 100	≥ 100
Material: housing	zinc diecast nickel plated / brass nickel plated	-
Material: contact body	PA	-
Material: contacts	CuSn	-
Material: contact finish	Au	Au
Material: gaskets	FKM; NBR	-
Environmental Requirements		
Shock	50 g	-
Protection against particulate ingress	IP6X	IP6X
Protection against water / immersion	IPX7	IPX7
Ambient temperature	-40° C to +85° C	-40° C to +85° C
Electrical Characteristics		
Contact resistance	≤ 5 mΩ	≤ 20 mΩ
Insulation resistance	≥ 100 MΩ	≥ 500 mΩ
Voltage proof: contact-contact	≥ 500 V, DC	≥ 1000 V, DC
Voltage proof: contact-shield	≥ 500 V, DC	≥ 1500 V, DC
PoE+ acc to IEEE 802.3at	Adequate for Power over Ethernet+	Adequate for Power over Ethernet+
Transmission Characteristics		
10 Gigabit Ethernet acc. to IEEE 802.3an	Adequate for 10 Gigabit Ethernet	Adequate for 10 Gigabit Ethernet
Category 6$_A$	ISO/IEC 11801; DIN EN 50173-1	ISO/IEC 11801; DIN EN 50173-1
Class E$_A$	ISO/IEC 11801; DIN EN 50173-1	ISO/IEC 11801; DIN EN 50173-1
Category 6A	ANSI/TIA/EIA-568-C.2	ANSI/TIA/EIA-568-C.2

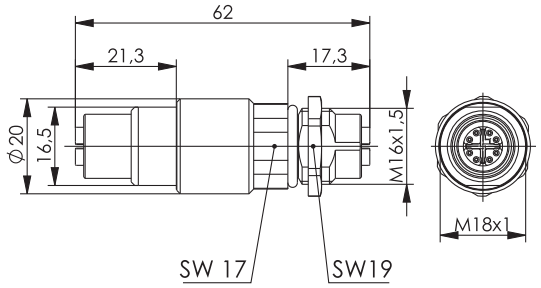

Order no.	Description	Short name	Type	Mount. dim.
J80029A0100	STX M12x1-M12x1 CO X-cod. Cat.6$_A$	CO-8X-180-8X-180-C6A000	mating face 1: 8-pole, X-coded, straight; mating face 2: 8-pole, X-coded, straight; Cat.6$_A$	Z140

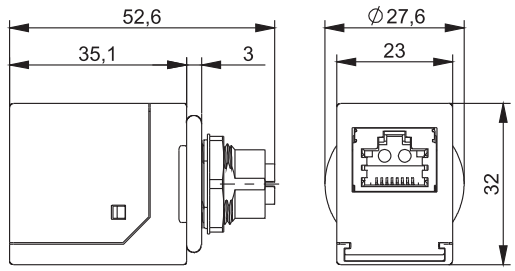

Order no.	Description	Short name	Type	Mount. dim.
J80029A0200	STX M12x1-RJ45 CO X-cod. Cat.6$_A$	CO-8X-180-45-180-C6A000	mating face 1: 8-pole, X-coded, straight; mating face 2: RJ45, straight; Cat.6$_A$	Z140

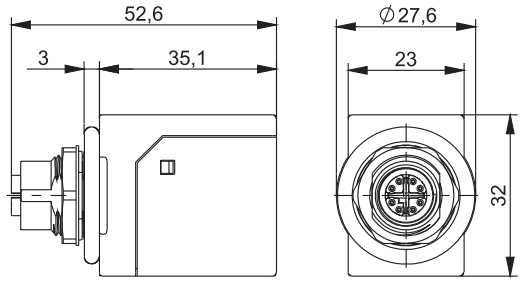

Order no.	Description	Short name	Type	Mount. dim.
J80629A0200	STX M12x1-RJ45 CO X-cod. Cat.6$_A$	CO-8X-180-45-090-C6A000	mating face 1: 8-pole , X-coded, straight; mating face 2: RJ45, angled; Cat.6$_A$	Z140

3.3 VM-Pro 8-8 Class F_A IP67

The connection module VM-Pro 8-8 Class F_A (1000 MHz) IP67 offers transmission properties up to Class F_A acc. to ISO/IEC 11801 and is suitable for installation and patch cables. Shielded and unshielded cables with solid and stranded conductors of AWG 22-27 type and outer diameter of 5.5 - 9.0 mm can be connected with the VM-Pro 8-8 Class F_A (1000 MHz) IP67. Due to its compact shape the connection module is suitable for use in tight spaces. Assembly of the VM-Pro 8-8 Class F_A (1000 MHz) IP67 connection module requires no special tools and is complete in a few steps. The mechanical stability, the insulated structure and the protection against external influences enables versatile use of the VM-Pro 8-8 Class F_A (1000 MHz) IP67 for laying and repairing cables in building, residential and industrial building cabling.
The IP67 connection module is shielded, insulated by the plastic screw glands, safe from manipulation and enables reliable strain relief.

Performance Characteristics

- Class F_A (1000 MHz)
- real-time re-embedded
- suitable for 100 / 250 / 500 / 1000 MHz installation and patch cords
- connection via IDC termination
- isolated construction
- Cable diameter: 5.5 - 9.0 mm
- wire diameter: 0.85 - 1.6 mm
- connection of 4-pair shielded/unshielded installation and patch cords from AWG 27-22
- pairs can be brought directly up to the terminal without untwisting the pairs
- EMC tested acc. to DIN EN 61000-6-1 and DIN EN 61000-6-2

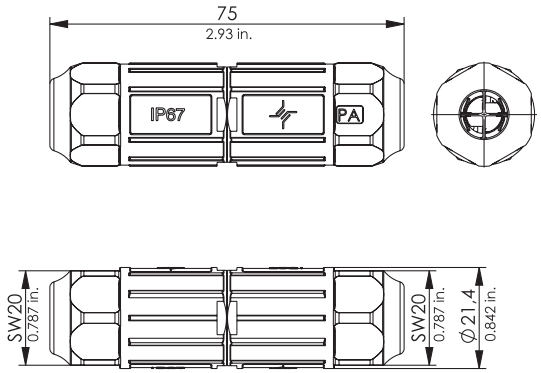

REAL-TIME RE-EMBEDDED

Order no.	Description	Remarks	Colour
J80060A0000	VM-Pro 8-8 Class F_A IP67	AWG27-22	black

Connectors for modern industrial applications need to be designed in such a way that they simplify processes and cope with faster data transmission. Telegärtner recommends the connectors of Variant 1 for generic cabling of factory automation machinery (Automation Island, ODVA) acc. to IEC 61918 in a robust metal or plastic design. The connectors of Variant 1 are standardized in the IEC 61076-3-106, designed to meet the demands of harsh industrial environments, guaranteeing protection class IP67 whether mated or unmated (using the IP67 protection cap). Furthermore, the modular principle - which is used on all connectors with STEADYTEC®-Technology allows us to offer a wide range of products. Benefit from maximum flexibility and choose the insert you need! The RJ45 plug and bulkhead inserts stand out due to high power reserves and offer transmission characteristics of Class E_A acc. to ISO/IEC 11801. The FO plug and bulkhead inserts are available for GOF and POF-fibres and provide the most suitable solution for every application.

Performance Characteristics

- Variant 1 acc. to IEC 61076-3-106
- protection class IP67
- available with RJ45 Cat.6_A, Cat.6 Class E_A, USB or FO insert
- rugged zinc diecast or plastic housing
- storage of cables with diameter 5...10 mm
- pre-assembled plugs and set products for simple assembly
- simple mounting of bulkheads through a central screwed gland or four screws
- with bend protection to prevent cables from being excessively bent
- NBR aiguilette at the protection cap
- bay for marking labels

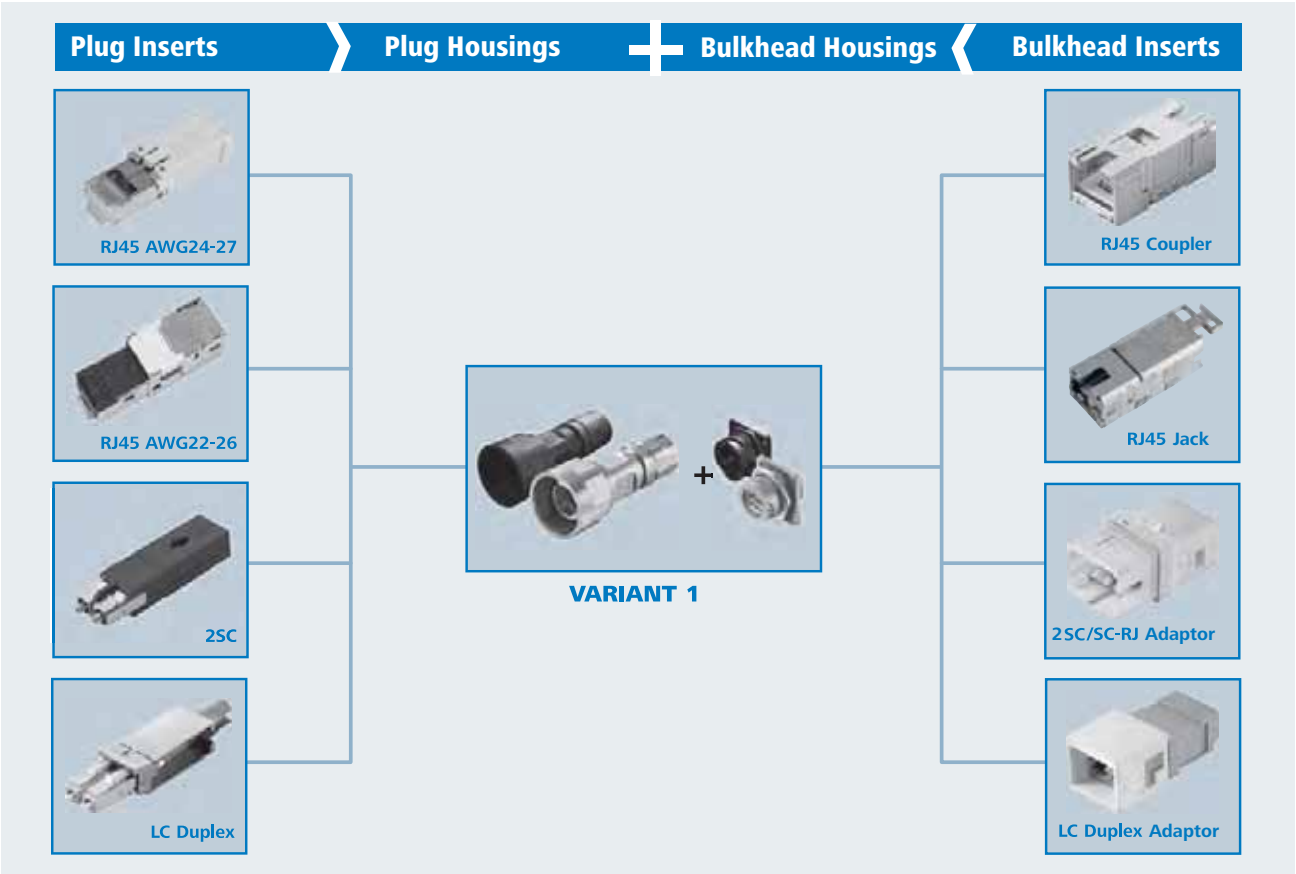

3.4 Variant 1

3.4.1 RJ45 Plug Sets Variant 1

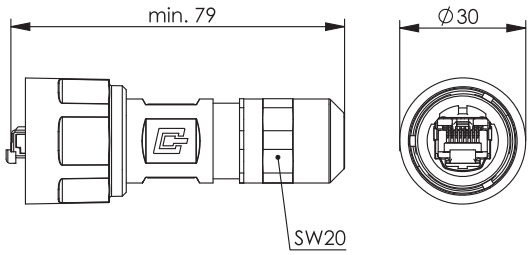

Order no.	Description	Solid/Stranded	Housing	Remarks
J80026A0005	STX V1 RJ45 plug set Cat.6_A	AWG24-27	metal	without bend protection

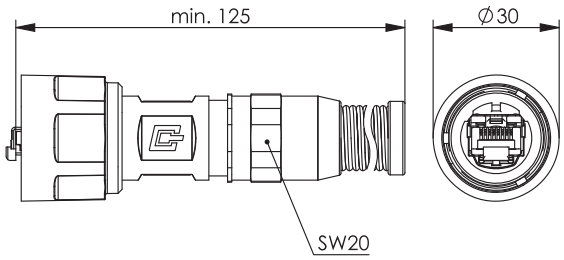

Order no.	Description	Solid/Stranded	Housing	Remarks
J80026A0006	STX V1 RJ45 plug set Cat.6_A	AWG24-27	metal	with bend protection

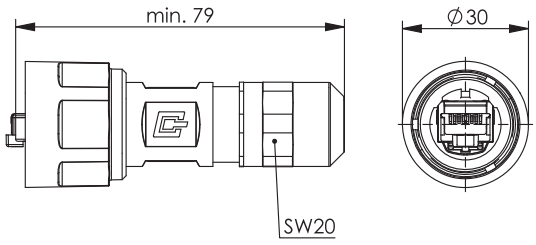

Order no.	Description	Solid/Stranded	Housing	Remarks
J80026A0007	STX V1 RJ45 plug set Cat.6 Class E_A	AWG22-26	metal	field assembly, without bend protection

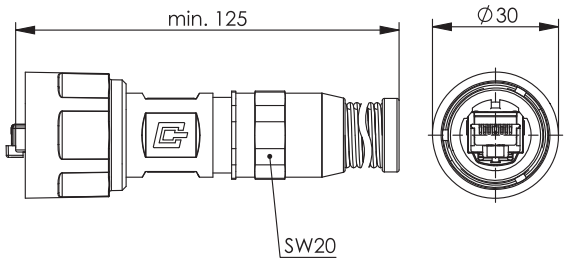

Order no.	Description	Solid/Stranded	Housing	Remarks
J80026A0008	STX V1 RJ45 plug set Cat.6 Class E_A	AWG22-26	metal	field assembly, with bend protection

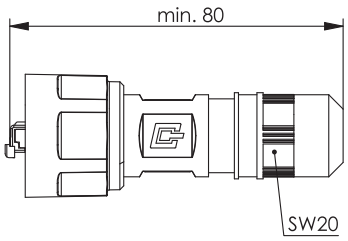

Order no.	Description	Solid/Stranded	Housing	Remarks
J80026A0009	STX V1 RJ45 plug set Cat.6_A	AWG24-27	plastic	without bend protection

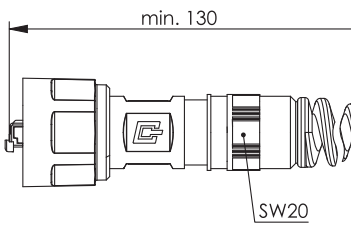

Order no.	Description	Solid/Stranded	Housing	Remarks
J80026A0010	STX V1 RJ45 plug set Cat.6_A	AWG24-27	plastic	with bend protection

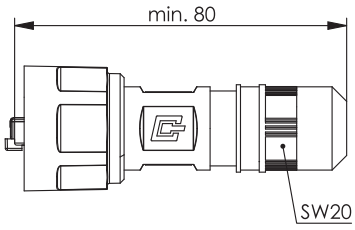

Order no.	Description	Solid/Stranded	Housing	Remarks
J80026A0011	STX V1 RJ45 plug set Cat.6 Class E_A	AWG22-26	plastic	without bend protection, field assembly

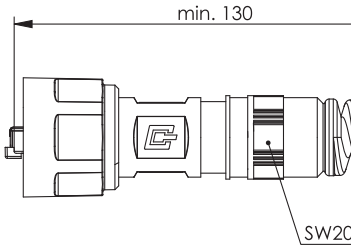

Order no.	Description	Solid/Stranded	Housing	Remarks
J80026A0012	STX V1 RJ45 plug set Cat.6 Class E_A	AWG22-26	plastic	with bend protection, field assembly

3.4 Variant 1

3.4.2 FO Plug Sets Variant 1

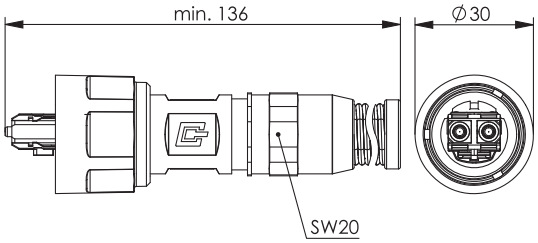

Order no.	Description	Housing	Connector type	Fiber type	Remarks
J88083A0008	STX V1 FO plug set	metal	2SC	Singlemode	without bend protection
J88083A0009	STX V1 FO plug set	metal	2SC	Singlemode	with bend protection
J88083A0006	STX V1 FO plug set	metal	2SC	Multimode	without bend protection
J88083A0007	STX V1 FO plug set	metal	2SC	Multimode	with bend protection
J88083A0010	STX V1 FO plug set	metal	2SC	POF	without bend protection
J88083A0011	STX V1 FO plug set	metal	2SC	POF	with bend protection

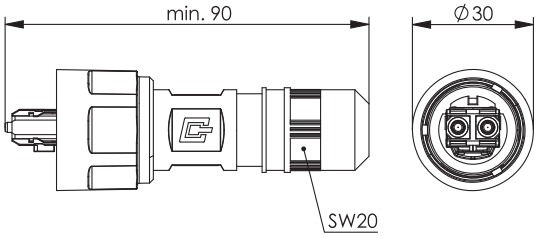

Order no.	Description	Housing	Connector type	Fiber type	Remarks
J88083A0014	STX V1 FO plug set	plastic	2SC	Singlemode	without bend protection
J88083A0015	STX V1 FO plug set	plastic	2SC	Singlemode	with bend protection
J88083A0012	STX V1 FO plug set	plastic	2SC	Multimode	without bend protection
J88083A0013	STX V1 FO plug set	plastic	2SC	Multimode	with bend protection
J88083A0016	STX V1 FO plug set	plastic	2SC	POF	without bend protection
J88083A0017	STX V1 FO plug set	plastic	2SC	POF	with bend protection

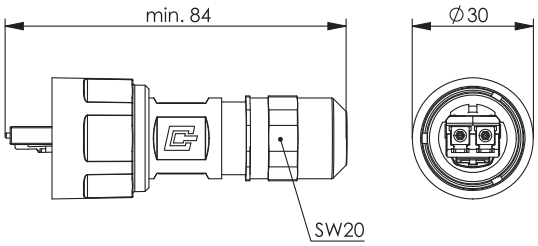

Order no.	Description	Housing	Connector type	Fiber type	Remarks
J88073A0006	STX V1 FO plug set	metal	LC Duplex	Singlemode	without bend protection
J88073A0007	STX V1 FO plug set	metal	LC Duplex	Singlemode	with bend protection
J88073A0004	STX V1 FO plug set	metal	LC Duplex	Multimode	without bend protection
J88073A0005	STX V1 FO plug set	metal	LC Duplex	Multimode	with bend protection

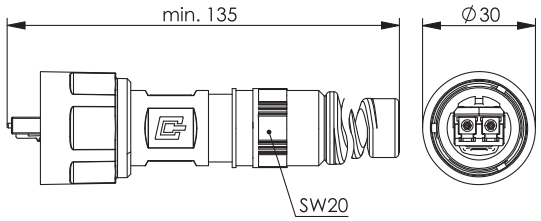

Order no.	Description	Housing	Connector type	Fiber type	Remarks
J88073A0010	STX V1 FO plug set	plastic	LC Duplex	Singlemode	without bend protection
J88073A0011	STX V1 FO plug set	plastic	LC Duplex	Singlemode	with bend protection
J88073A0008	STX V1 FO plug set	plastic	LC Duplex	Multimode	without bend protection
J88073A0009	STX V1 FO plug set	plastic	LC Duplex	Multimode	with bend protection

RJ45 Plug Inserts Variant 1

3.4.3

	Plug Insert AWG24-27	Plug Insert AWG22-26
Standards		
Custom-designed cabling systems	-	PROFINET Installation Guideline
Generic cabling systems	ISO/IEC 11801; EN 50173-1; ISO/IEC 24702; IEC 61918	
Connectors	IEC 60603-7-51	IEC 60603-7-5
Degrees of protection provided by enclosures (IP code)	IEC 60529	IEC 60529
Mechanical Characteristics		
Insertion force	≤ 30 N	≤ 30 N
Durability (mating cycles)	≥ 750	≥ 750
Material: connector housing	PC UL94 V0 crystal clear	zinc diecast, nickel plated
Material: contacts	phosphor bronze	tin bronze
Material: contact finish	min. 0.8 µm Au on 2.54 µm Ni	min. 0.8 µm Au on 2.54 µm Ni
Material: contact IDC termination	-	tin bronze
Material: IDC termination finish	-	tin plated
Material: shield	0.5 mm brass	German silver
Material: shield finish	2 µm Ni	-
Cu-Conductor diameter: stranded	0.46 - 0.61 mm AWG 27/7 - AWG 24/7	0.48 - 0.76 mm AWG 26/7 - AWG 22/7
Cu-Conductor diameter: solid	0.36 - 0.51 mm AWG 27/1 - AWG 24/1	0.41 - 0.64 mm AWG 26/1 - AWG 22/1
Core Diameter	0.85 - 1.05 mm	0.85 - 1.6 mm
Cable diameter	5.0 - 7.3 mm	5.5 - 8.5 mm
Environmental Requirements		
Protection against particulate ingress	IP2X	IP2X
Protection against water / immersion	IPX0	IPX0
Ambient temperature	-40° C to + 70° C	-40° C to + 70° C
Rapid change of temperature	-40° C to + 70° C / 25 cycles t=30 min.	-40° C to + 70° C / 25 cycles t=30 min.
Climatic damp heat	+25° C / +65° C / 93% RH // -10° C / 21 cycles	
Flowing mixed gas	+25°C / 73% RH / 4 days, H_2S / SO_2	
Climatic Characteristics		
Temperature range [°C]	-40° C to 70° C	-40° C to 70° C
Electrical Characteristics		
Current carrying capacity at 50°C	1 A	1 A
PoE+ acc to IEEE 802.3at	fulfilled	fulfilled
Transmission Characteristics		
10 Gigabit Ethernet acc. to IEEE 802.3an	fulfilled	fulfilled
Category 6_A (Component)	ISO/IEC 11801, DIN EN 50173-1	-
Class E_A (Channel)	ISO/IEC 11801, DIN EN 50173-1	ISO/IEC 11801, DIN EN 50173-1

3.4

3.4 Variant 1

3.4.3 RJ45 Plug Inserts Variant 1

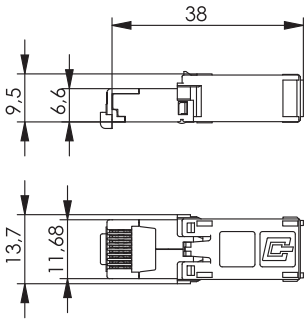

Order no.	Description	Solid/Stranded
J80026A0002	STX RJ45 plug insert Cat.6_A	AWG24-27

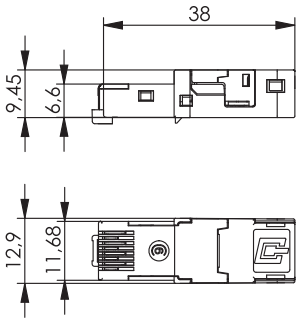

Order no.	Description	Solid/Stranded	Remarks
J80026A0004	STX RJ45 plug insert Cat.6 Class E_A	AWG22-26	field assembly

FO Plug Inserts 2SC Variant 1

3.4.4

	Plug Insert 2SC	Plug Insert LC Duplex
Standards		
Generic cabling systems	ISO/IEC 11801; EN 50173-1; ISO/IEC 24702; IEC 61918	
Custom-designed cabling systems	PROFINET Installation Guideline	-
Connectors	similar to IEC 61754-24	IEC 61754-20
Degrees of protection provided by enclosures (IP code)	IEC 60529	IEC 60529
Mechanical Characteristics		
Insertion force	≤ 30 N	≤ 30 N
Durability (mating cycles)	≥ 500	≥ 500
Material: plug retainer	PA 66	zinc diecast, nickel plated
Material: plug	SC	LC
Material: ferrule	Zirconia	Zirconia
Material: fixing part	-	PBT
Material: crimp sleeve	Copper nickel plated	Copper nickel plated
Material: cable boot	TPE black	TPE black
Material: protection cap	TPE	PP
buffered optical fiber diameter	0.9 mm	0.9 mm
Subcable diameter	2.5-3 mm	2.5-3 mm
Overall cable diameter	5.0-8.0 mm	5.0-8.0 mm
Environmental Requirements		
Protection against particulate ingress	IP2X	IP2X
Protection against water / immersion	IPX0	IPX0
Ambient temperature	-40° C to +65° C	-40° C to + 70° C
Rapid change of temperature	-40° C bis +65° C / 25 cycles t=30 min	-40° C to +85° C / 25 cycles t=30 min
Climatic damp heat	-40°C / +65° C/ rhmax=85% / rhmin=20% / 21 cycles	
Electrical Characteristics		
Insertion loss	Singlemode: max. 0.5 dB; Multimode: max. 0.4 dB	Singlemode: max. 0.5 dB; Multimode: max. 0.4 dB
Return loss	min. 30 dB	min. 30 dB

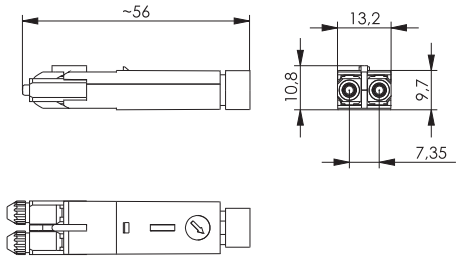

Order no.	Description	Connector type	Fiber type
F80083A0004	STX FO plug insert	2SC	Multimode
F80083A0005	STX FO plug insert	2SC	Multimode
F80083A0006	STX FO plug insert	2SC	POF
F80083A0007	STX FO plug insert	2SC	PCF

3.4

3.4 Variant 1

3.4.5 FO Plug Inserts LC Duplex Variant 1

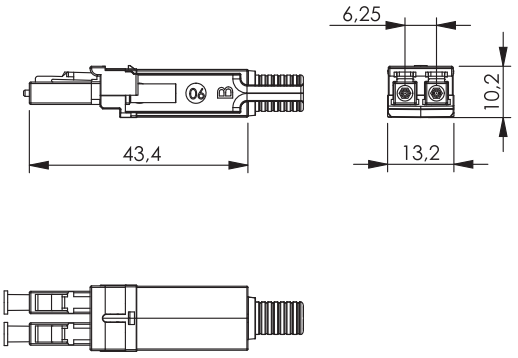

Order no.	Description	Connector type	Fiber type
F80073A0001	STX FO plug insert	LC Duplex	Singlemode
F80073A0000	STX FO plug insert	LC Duplex	Multimode

3.4.6 Plug Housings Variant 1

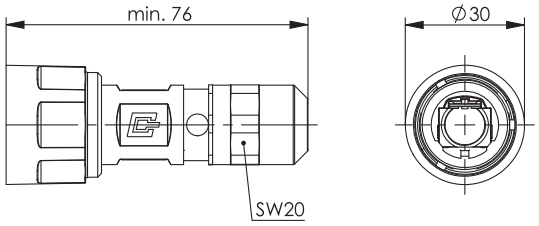

Order no.	Description	Housing	Remarks
H86010A0000	STX V1 plug housing	metal	without bend protection

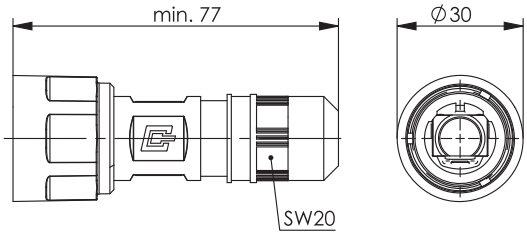

Order no.	Description	Housing	Remarks
H86011A0010	STX V1 plug housing	plastic	without bend protection

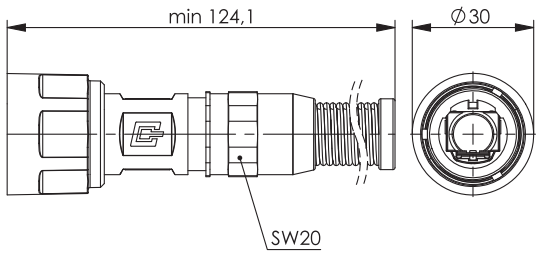

Order no.	Description	Housing	Remarks
H86010B0000	STX V1 plug housing	metal	with bend protection

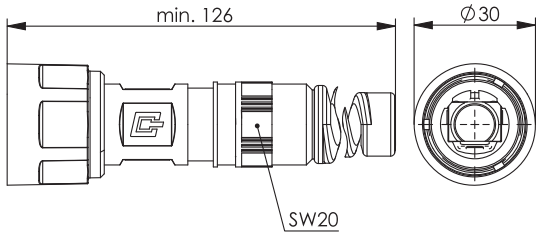

Order no.	Description	Housing	Remarks
H86011B0010	STX V1 plug housing	plastic	with bend protection

Protection Cap for Plug Variant 1 — 3.4.7

Performance Characteristics

- plug protective cap for plug housing complying with IEC 61076-3-106 Variant 1
- to protect plug inserts inside of plug housing
- protection class IP67 in combination with plug housing
- protection class IP67 in combination with bulkhead protective cap
- flammability rating as per UL94 V0
- high resistance to chemicals
- captive, attached protective cap
- twist-off grip facility
- bayonet lock

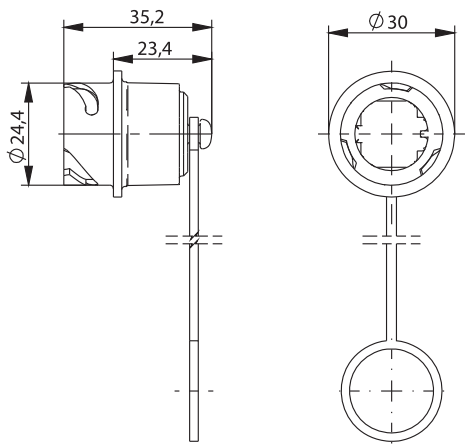

Order no.	Description	Remarks
H80030A0000	STX V1 plug protection cap	plastic

3.4 Variant 1

3.4.8 RJ45 Bulkhead Sets Variant 1

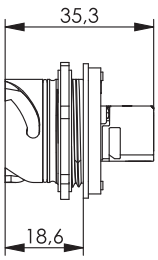

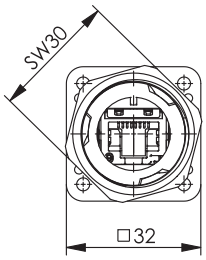

Order no.	Description	Housing	Insert	Mount. dim.
J80020A0001	STX V1 bulkhead set	metal	RJ45 coupler Cat.6, suitable for Class E_A Channel	Z124; Z125

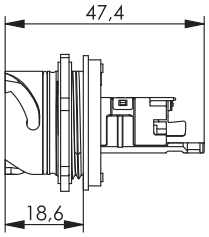

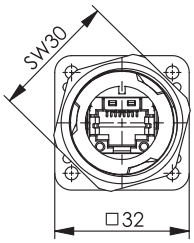

Order no.	Description	Housing	Insert	Mount. dim.
J80020A0000	STX V1 bulkhead set	metal	RJ45 jack A Cat.6_A	Z124; Z125

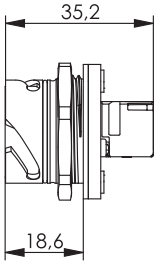

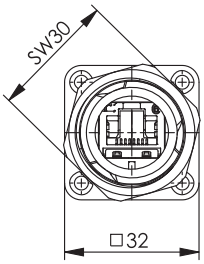

Order no.	Description	Housing	Insert	Mount. dim.
J80020A0003	STX V1 bulkhead set	plastic	RJ45 coupler Cat.6, suitable for Class E_A Channel	Z124; Z125

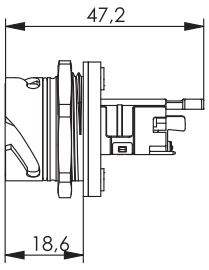

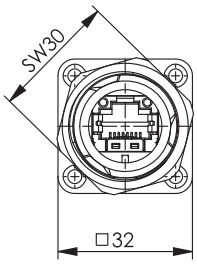

Order no.	Description	Housing	Insert	Mount. dim.
J80020A0002	STX V1 bulkhead set	plastic	RJ45 jack A Cat.6_A	Z124; Z125

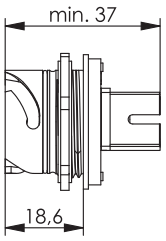

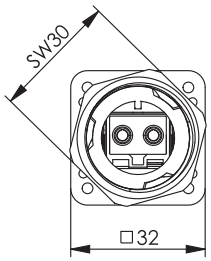

Order no.	Description	Housing	Fiber type	Insert	Mount. dim.
J88084A0003	STX V1 bulkhead set	metal	Singlemode	2SC/SC-RJ adaptor	Z124; Z125
J88084A0002	STX V1 bulkhead set	metal	Multimode	2SC/SC-RJ adaptor	Z124; Z125

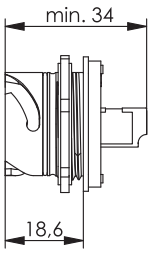

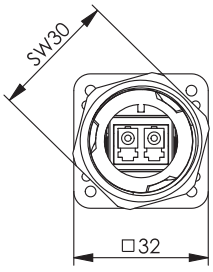

Order no.	Description	Housing	Fiber type	Insert	Mount. dim.
J88074A0003	STX V1 bulkhead set	metal	Singlemode	LC Duplex	Z124; Z125
J88074A0002	STX V1 bulkhead set	metal	Multimode	LC Duplex	Z124; Z125

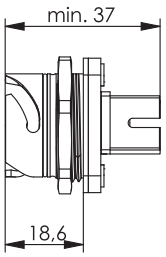

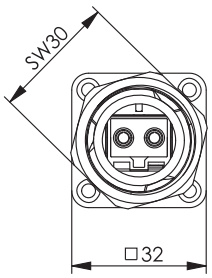

Order no.	Description	Housing	Fiber type	Insert	Mount. dim.
J88084A0005	STX V1 bulkhead set	plastic	Singlemode	2SC/SC-RJ adaptor	Z124; Z125
J88084A0004	STX V1 bulkhead set	plastic	Multimode	2SC/SC-RJ adaptor	Z124; Z125

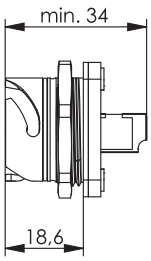

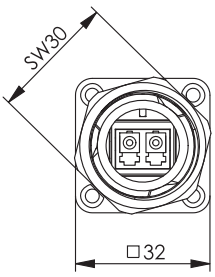

Order no.	Description	Housing	Fiber type	Insert	Mount. dim.
J88074A0005	STX V1 bulkhead set	plastic	Singlemode	LC Duplex	Z124; Z125
J88074A0004	STX V1 bulkhead set	plastic	Multimode	LC Duplex	Z124; Z125

3.4 Variant 1

3.4.10 RJ45 Bulkhead Inserts Variant 1

	STX RJ45 Jack	STX RJ45 Coupler
Standards		
Custom-designed cabling systems	ISO/IEC 11801; EN 50173-1; ISO/IEC 24702; IEC 61918	
Generic cabling systems	PROFINET Installation Guideline	PROFINET Installation Guideline
Connectors	IEC 60603-7-51	IEC 60603-7-5
Degrees of protection provided by enclosures (IP code)	IEC 60529	IEC 60529
Mechanical Characteristics		
Insertion force	≤ 30 N	≤ 30 N
Durability (mating cycles)	≥ 750	≥ 750
Material: jack housing	zinc diecast	zinc diecast
Material: housing finish	CuSnZn	nickel plated
Material: contacts	spring steel	spring steel
Material: contact finish	min. 0,8 µm Au on 1,2 µm Ni	min. 0,8 µm Au on 1,2 µm Ni
Material: shield	German silver	German silver
Material: contact IDC termination	CuNi2Si	-
Material: IDC termination finish	min. 3-6 µm Sn	-
Cu-Conductor diameter: stranded	0.46 - 0.76 mm AWG 27/7 - AWG 22/7	-
Cu-Conductor diameter: solid	0.41 - 0.64 mm AWG 26/1 - AWG 22/1	-
Core Diameter	0.9 - 1.6 mm	
Reusable IDC for AWG 22/1; AWG 22/7	≤4 cycles	
Reusable IDC für AWG 23/1 - AWG 26/1; AWG 24/7 - AWG 26/7	≤10 cycles	
Environmental Requirements		
Protection against particulate ingress	IP2X	IP2X
Protection against water / immersion	IPX0	IPX0
Ambient temperature	-40° C to + 70° C	-40° C to + 70° C
Rapid change of temperature	-40° C to + 70° C / 25 cycles t=30 min.	-40° C to + 70° C / 25 cycles t=30 min.
Climatic damp heat	+25° C / +65° C / 93% RH // -10° C / 21 cycles	
Flowing mixed gas	+25°C / 73% RH / 4 days, H_2S / SO_2	
Climatic Characteristics		
Temperature range [°C]	-40° C to 70° C	-40° C to 70° C
Electrical Characteristics		
Current carrying capacity at 50°C	1 A	1 A
PoE+ acc to IEEE 802.3at	fulfilled	fulfilled
Transmission Characteristics		
10 Gigabit Ethernet acc. to IEEE 802.3an	fulfilled	fulfilled
Category 6_A (Component)	ISO/IEC 11801, DIN EN 50173-1	-
Class E_A (Channel)	ISO/IEC 11801, DIN EN 50173-1	ISO/IEC 11801, DIN EN 50173-1

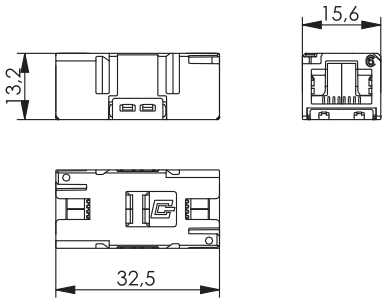

Order no.	Description	Remarks
J80029A0010	STX RJ45 coupler Cat.6 Class E_A	suitable for Class E_A Channel

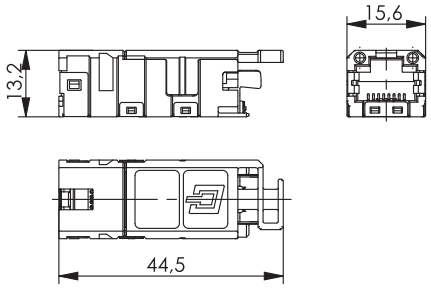

Order no.	Description	Colour coding
J80029A0000	STX RJ45 jack A Cat.6_A	TIA 568 A
J80029A0001	STX RJ45 jack B Cat.6_A	TIA 568 B
J80029A0002	STX RJ45 jack P Cat.6_A	PROFINET

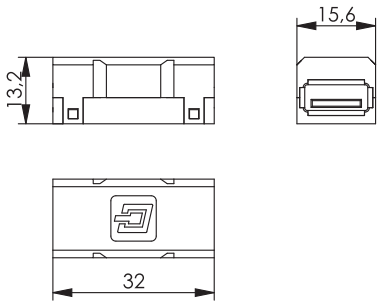

Order no.	Description
J80029A0004	STX USB coupler 2.0 type A, f-f
J80029A0011	STX USB coupler 2.0 type A-B, f-f
J80029A0013	STX USB coupler 3.0 type A, f-f

FO Bulkhead Inserts 2SC/SC-RJ Variant 1

3.4.11

	Adaptor SC-RJ/2SC (MM)	Adaptor SC-RJ/2SC (SM)	Adaptor LC Duplex (MM)	Adaptor LC Duplex (SM)
Standards				
Generic cabling systems	ISO/IEC 11801; EN 50173-1; ISO/IEC 24702; IEC 61918			
Custom-designed cabling systems	PROFINET Installation Guideline		-	-
Connectors	similar to IEC 61754-24; similar to EN 50377-6		IEC 61754-20; EN 50377-7	
Fiber optic interconnectiong devices and passive components- Basic test and measurement procedures	IEC 61300-2-x; IEC 61300-3-x	IEC 61300-2-x; IEC 61300-3-x	IEC 61300-2-x; IEC 61300-3-x	IEC 61300-2-x; IEC 61300-3-x
Degrees of protection provided by enclosures (IP code)	IEC 60529	IEC 60529	IEC 60529	IEC 60529
Mechanical Characteristics				
Insertion force	≤ 30 N	≤ 30 N	≤ 30 N	≤ 30 N
Durability (mating cycles)	≥ 500	≥ 500	≥ 500	≥ 500
Material: housing	PBT beige	PBT blue	PEI UL94 V0	PEI UL94 V0
Material: clamps	PBT beige	PBT blue	-	-
Material: frame	-	-	PBT beige	PBT blue
Material: split sleeve	phosphor bronze	zirconia	phosphor bronze	zirconia
Material: protection cap	TPE, black	TPE, black	PP	PP
Environmental Requirements				
Protection against particulate ingress	IP2X	IP2X	IP2X	IP2X
Protection against water / immersion	IPX0	IPX0	IPX0	IPX0
Ambient temperature	-40° C to +65° C			
Rapid change of temperature	-40° C to +65° C / 25 cycles t=30 min			
Climatic damp heat	-40°C / +65° C/ rhmax=85% / rhmin=20% / 21 cycles			
Flowing mixed gas	+25°C / 73% RH / 4 days, H_2S / SO_2			
Optical Characteristics				
Insertion loss	max. 0.4 dB	max. 0.5 dB	max. 0.4 dB	max. 0.5 dB
Return loss	min. 30 dB	min. 40 dB	min. 30 dB	min. 40 dB

3.4

3.4 Variant 1

3.4.11 FO Bulkhead Inserts 2SC/SC-RJ Variant 1

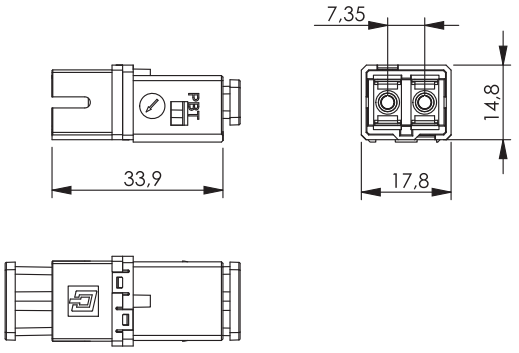

Order no.	Description	Connector type	Fiber type
F80084A0001	STX FO adaptor	2SC/SC-RJ	Singlemode
F80084A0000	STX FO adaptor	2SC/SC-RJ	Multimode

3.4.12 FO Bulkhead Inserts LC Duplex Variant 1

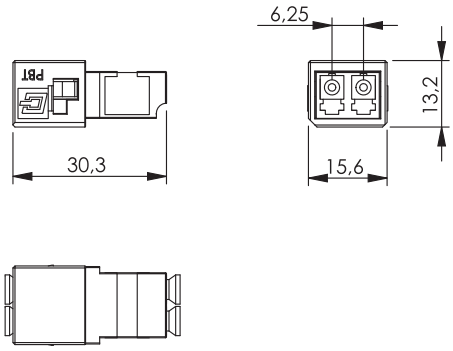

Order no.	Description	Connector type	Fiber type
F80074A0001	STX FO adaptor	LC Duplex	Singlemode
F80074A0000	STX FO adaptor	LC Duplex	Multimode

3.4.13 Bulkhead Housings Variant 1

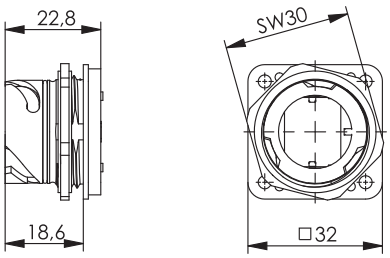

Order no.	Description	Housing	Mount. dim.
H86000A0000	STX V1 bulkhead	metal	Z124; Z125

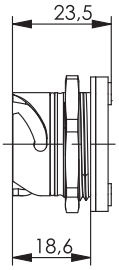

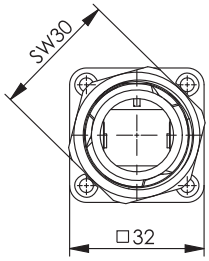

Order no.	Description	Housing	Mount. dim.
H86000A0001	STX V1 bulkhead	plastic	Z124; Z125

Protection Cap for Bulkhead Variant 1 — 3.4.14

Performance Characteristics

- bulkhead protective cap for bulkhead complying with IEC 61076-3-106 Variant 1
- to protect bulkhead inserts inside of bulkhead
- protection class IP67 in combination with bulkhead
- protection class IP67 in combination with plug protective cap
- flammability rating as per UL94 V0
- high resistance to chemicals
- captive, attached protective cap
- twist-off grip facility
- bayonet lock

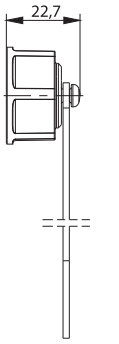

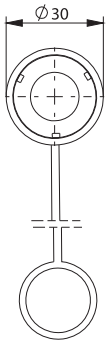

Order no.	Description	Remarks
H80030A0004	STX V1 bulkhead protection cap	plastic

Outlets with Bulkhead Variant 1 — 3.4.15

The specification of an Automation Outlet (TO) is based on IEC 61918. It is one of the functional elements of a generic cabling for factory automation machinery in areas subject to extreme ambient stresses due to temperature, dust, moisture or splashing water. For this purpose Telegärtner offers industrial outlets with mounted bulkheads of Variant 1. They are used to connect devices or complete automation islands. The unbreakable, powder-coated housings in RAL 7001 are available as single- or double gang versions in protection class IP67, allowing installation direct in manufacturing environments.

	STX Outlet Metal	STX Outlet Plastic
Standards		
Connectors	IEC 61076-3-106	IEC 61076-3-106
Degrees of protection provided by enclosures (IP code)	IEC 60529	IEC 60529
Mechanical Characteristics		
Material: O-ring	-	NBR (silicone free)
Material: housing	aluminium, grey coated	PA UL94 V0
Material: screws to fix the cover of housing	Stainless steel	-
Material: gaskets	CR, black	-
Material: ground connection	Stainless steel	-
Material: cable gland	brass, PA	-
Environmental Requirements		
Protection against particulate ingress	IP6X	IP6X
Protection against water / immersion	IPX7	IPX7
Ambient temperature	-40° C to + 70° C	-40° C to + 70° C
Rapid change of temperature	-40° C to + 70° C / 25 cycles t=30 min.	-40° C to + 70° C / 25 cycles t=30 min.
Climatic damp heat	+25° C / +65° C / 93% RH // -10° C / 21 cycles	
Neutral salt spray test	+35° C / 4 days; 5% NaCl	

3.4 Variant 1

3.4.15 Outlets with Bulkhead Variant 1

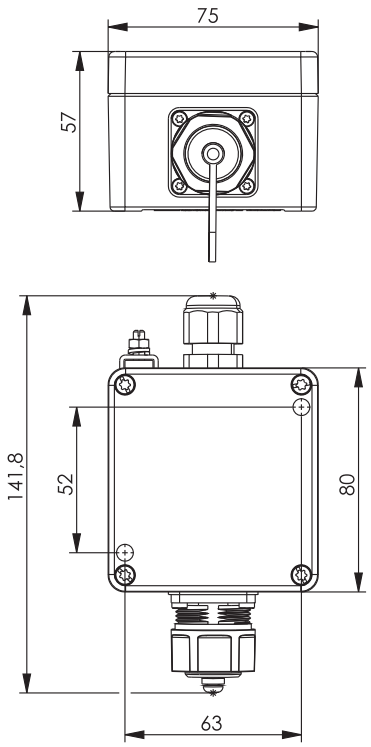

Order no.	Description	Type	Cable feed	Housing	Protection class	Size in mm
H82000A0006	STX V1 Surface mounting box	single gang	vertical	metal	IP67	LxWxH = 75x80x57

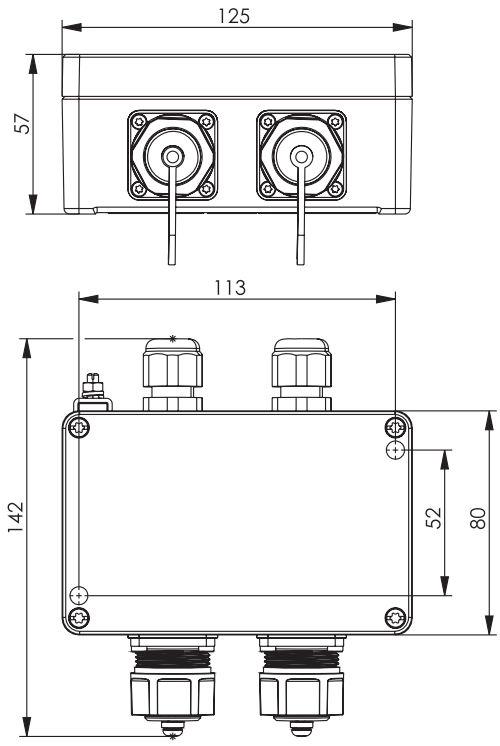

Order no.	Description	Type	Cable feed	Housing	Protection class	Size in mm
H82000A0008	STX V1 Surface mounting box	double gang	vertical	metal	IP67	LxWxH = 125x80x57

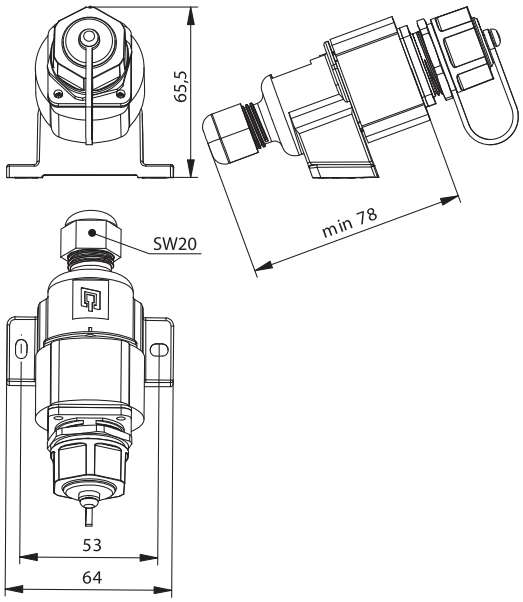

Order no.	Description	Housing	Insert	Remarks	Protection class
J80023A0016	STX V1 surface mounting outlet	plastic	RJ45 jack A Cat.6_A	including bulkhead protective cap	IP67
J80023A0017	STX V1 surface mounting outlet	plastic	RJ45 jack B Cat.6_A	including bulkhead protective cap	IP67

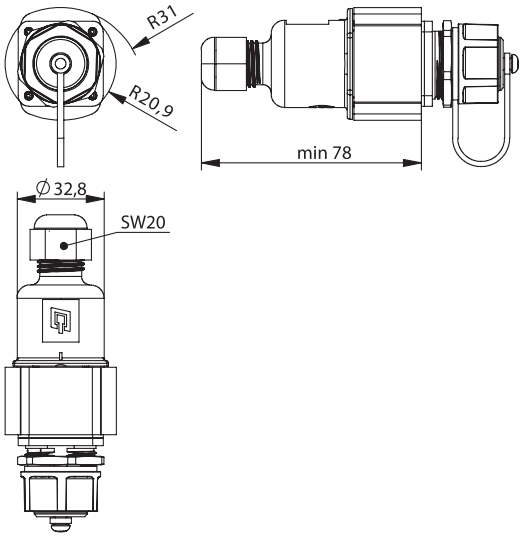

Order no.	Description	Housing	Insert	Remarks	Protection class
J80023A0019	STX V1 free coupling outlet	plastic	RJ45 jack A Cat.6_A	including bulkhead protective cap	IP67
J80023A0020	STX V1 free coupling outlet	plastic	RJ45 jack B Cat.6_A	including bulkhead protective cap	IP67

3.5 Variant 4

The standard for generic cabling in industrial premises ISO/IEC 24702 resp. EN 50173-1 and -3 stipulates the connector of Variant 4. This, extraordinary space saving connector provides a 10 Gbit-link to the machine while having the same installation dimensions as a 4-way M12 connector. The connectors of Variant 4 are standardized in the IEC 61076-3-106, designed to meet the demands of harsh industrial environments, guaranteeing protection class IP67 whether mated or unmated (using the IP67 protection cap). Furthermore, the modular principle -which is used on all connectors with STEADYTEC®-Technology allows us to offer a wide range of products. Benefit from maximum flexibility and choose the insert you need! The RJ45 plug and bulkhead inserts stand out due to high power reserves and offer transmission characteristics of Class E_A acc. to ISO/IEC 11801. The FO plug and bulkhead inserts are available for GOF and POF-fibres and provide the most suitable solution for every application.

Performance Characteristics

- Variant 4 acc. to IEC 61076-3-106
- protection class IP67
- available with RJ45 Cat.6_A , Cat.6 Class E_A , USB or FO insert
- rugged PA-Housing
- storage of cables with diameter 5...10 mm
- pre-assembled plugs and set products for simple assembly
- simple mounting of bulkheads through a central screwed gland or four screws
- with bend protection to prevent cables from being excessively bent
- NBR aiguilette at the protection cap
- bay for marking labels

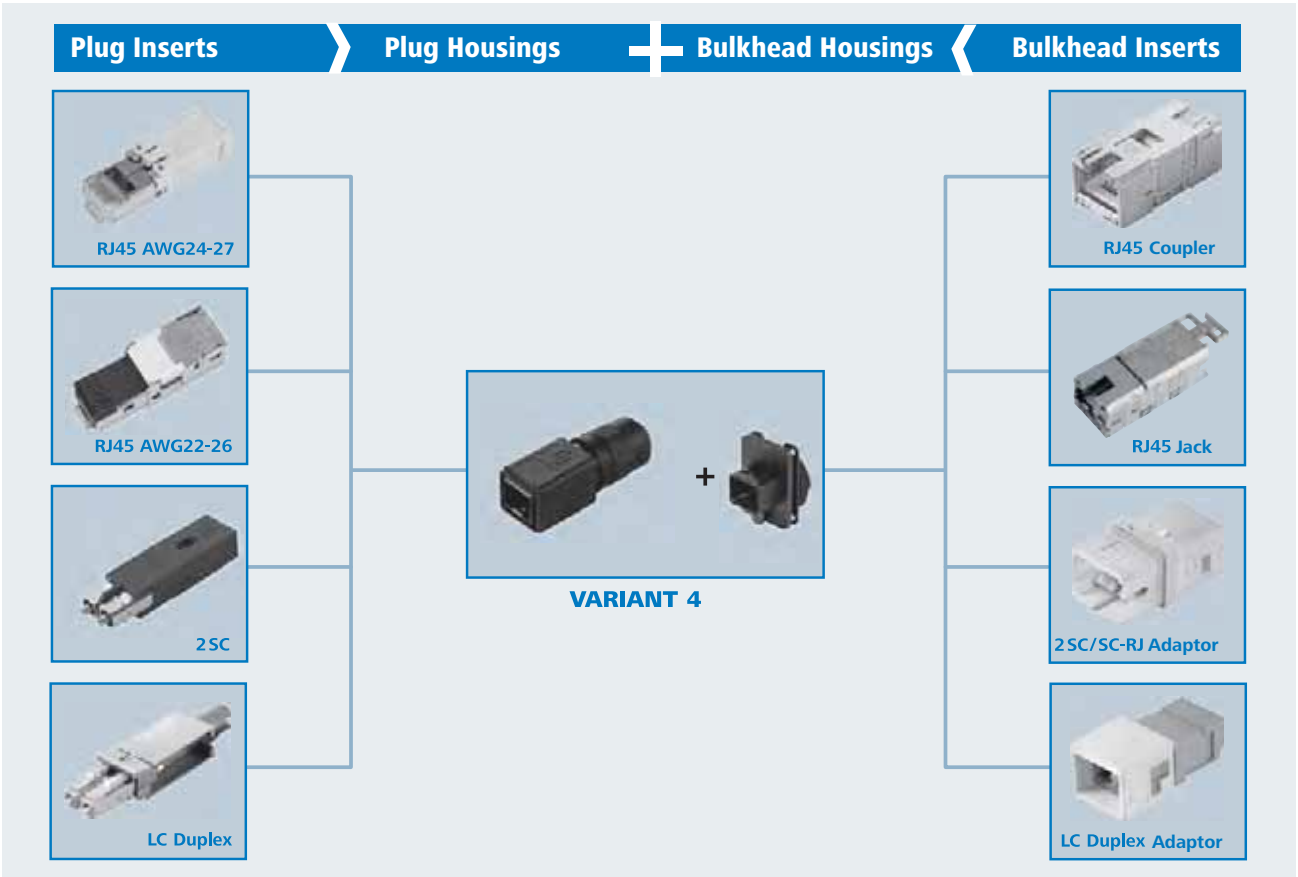

RJ45 Plug Sets Variant 4 — 3.5.1

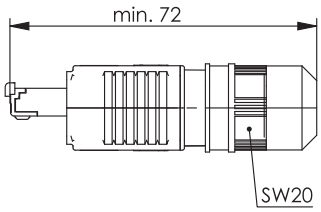

Order no.	Description	Solid/Stranded	Housing	Remarks
J80026A0013	STX V4 RJ45 plug set Cat.6_A	AWG24-27	plastic	without bend protection
J80026A0014	STX V4 RJ45 plug set Cat.6_A	AWG24-27	plastic	with bend protection

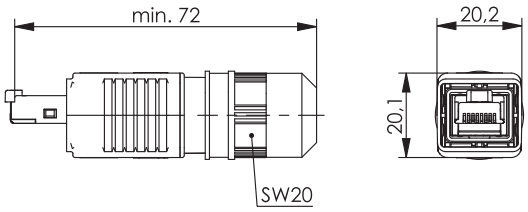

Order no.	Description	Solid/Stranded	Housing	Remarks
J80026A0015	STX V4 RJ45 plug set Cat.6 Class E_A	AWG22-26	plastic	without bend protection, field assembly
J80026A0016	STX V4 RJ45 plug set Cat.6 Class E_A	AWG22-26	plastic	with bend protection, field assembly

FO Plug Sets Variant 4 — 3.5.2

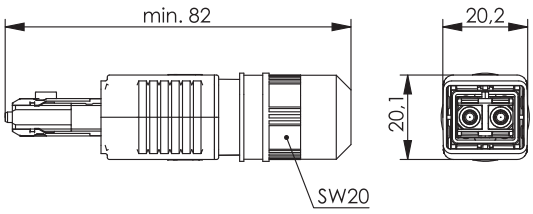

Order no.	Description	Housing	Connector type	Fiber type	Remarks
J88083A0002	STX V4 FO plug set	plastic	2SC	Singlemode	without bend protection
J88083A0003	STX V4 FO plug set	plastic	2SC	Singlemode	with bend protection
J88083A0000	STX V4 FO plug set	plastic	2SC	Multimode	without bend protection
J88083A0001	STX V4 FO plug set	plastic	2SC	Multimode	with bend protection
J88083A0004	STX V4 FO plug set	plastic	2SC	POF	without bend protection
J88083A0005	STX V4 FO plug set	plastic	2SC	POF	with bend protection

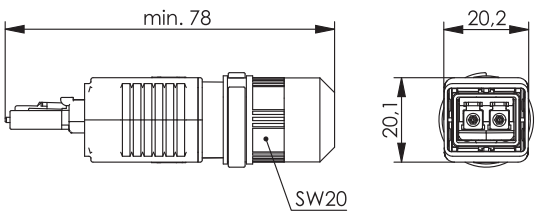

Order no.	Description	Housing	Connector type	Fiber type	Remarks
J88073A0002	STX V4 FO plug set	plastic	LC Duplex	Singlemode	without bend protection
J88073A0003	STX V4 FO plug set	plastic	LC Duplex	Singlemode	with bend protection
J88073A0000	STX V4 FO plug set	plastic	LC Duplex	Multimode	without bend protection
J88073A0001	STX V4 FO plug set	plastic	LC Duplex	Multimode	with bend protection

3.5 Variant 4

3.5.3 RJ45 Plug Inserts Variant 4

	Plug Insert AWG24-27	Plug Insert AWG22-26
Standards		
Custom-designed cabling systems	-	PROFINET Installation Guideline
Generic cabling systems	ISO/IEC 11801; EN 50173-1; ISO/IEC 24702; IEC 61918	
Connectors	IEC 60603-7-51	IEC 60603-7-5
Degrees of protection provided by enclosures (IP code)	IEC 60529	IEC 60529
Mechanical Characteristics		
Insertion force	≤ 30 N	≤ 30 N
Durability (mating cycles)	≥ 750	≥ 750
Material: connector housing	PC UL94 V0 crystal clear	zinc diecast, nickel plated
Material: contacts	phosphor bronze	tin bronze
Material: contact finish	min. 0.8 µm Au on 2.54 µm Ni	min. 0.8 µm Au on 2.54 µm Ni
Material: contact IDC termination	-	tin bronze
Material: IDC termination finish	-	tin plated
Material: shield	0.5 mm brass	German silver
Material: shield finish	2 µm Ni	-
Cu-Conductor diameter: stranded	0.46 - 0.61 mm AWG 27/7 - AWG 24/7	0.48 - 0.76 mm AWG 26/7 - AWG 22/7
Cu-Conductor diameter: solid	0.36 - 0.51 mm AWG 27/1 - AWG 24/1	0.41 - 0.64 mm AWG 26/1 - AWG 22/1
Core Diameter	0.85 - 1.05 mm	0.85 - 1.6 mm
Cable diameter	5.0 - 7.3 mm	5.5 - 8.5 mm
Environmental Requirements		
Protection against particulate ingress	IP2X	IP2X
Protection against water / immersion	IPX0	IPX0
Ambient temperature	-40° C to + 70° C	-40° C to + 70° C
Rapid change of temperature	-40° C to + 70° C / 25 cycles t=30 min.	-40° C to + 70° C / 25 cycles t=30 min.
Climatic damp heat	+25° C / +65° C / 93% RH // -10° C / 21 cycles	
Flowing mixed gas	+25°C / 73% RH / 4 days, H_2S / SO_2	
Climatic Characteristics		
Temperature range [°C]	-40° C to 70° C	-40° C to 70° C
Electrical Characteristics		
Current carrying capacity at 50°C	1 A	1 A
PoE+ acc to IEEE 802.3at	fulfilled	fulfilled
Transmission Characteristics		
10 Gigabit Ethernet acc. to IEEE 802.3an	fulfilled	fulfilled
Category 6_A (Component)	ISO/IEC 11801, DIN EN 50173-1	-
Class E_A (Channel)	ISO/IEC 11801, DIN EN 50173-1	ISO/IEC 11801, DIN EN 50173-1

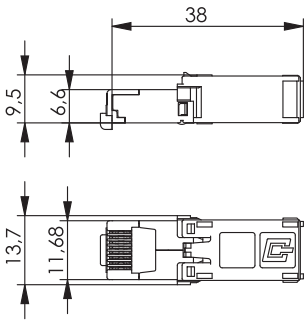

Order no.	Description	Solid/Stranded
J80026A0002	STX RJ45 plug insert Cat.6_A	AWG24-27

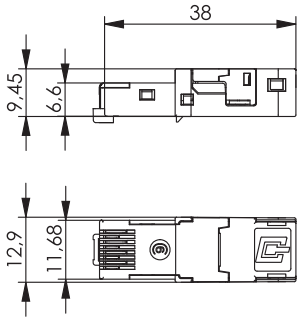

Order no.	Description	Solid/Stranded	Remarks
J80026A0004	STX RJ45 plug insert Cat.6 Class E_A	AWG22-26	field assembly

FO Plug Inserts 2SC Variant 4

3.5.4

	Plug Insert 2SC	Plug Insert LC Duplex
Standards		
Generic cabling systems	ISO/IEC 11801; EN 50173-1; ISO/IEC 24702; IEC 61918	
Custom-designed cabling systems	PROFINET Installation Guideline	-
Connectors	similar to IEC 61754-24	IEC 61754-20
Degrees of protection provided by enclosures (IP code)	IEC 60529	IEC 60529
Mechanical Characteristics		
Insertion force	≤ 30 N	≤ 30 N
Durability (mating cycles)	≥ 500	≥ 500
Material: plug retainer	PA 66	zinc diecast, nickel plated
Material: plug	SC	LC
Material: ferrule	Zirconia	Zirconia
Material: fixing part	-	PBT
Material: crimp sleeve	Copper nickel plated	Copper nickel plated
Material: cable boot	TPE black	TPE black
Material: protection cap	TPE	PP
buffered optical fiber diameter	0.9 mm	0.9 mm
Subcable diameter	2.5-3 mm	2.5-3 mm
Overall cable diameter	5.0-8.0 mm	5.0-8.0 mm
Environmental Requirements		
Protection against particulate ingress	IP2X	IP2X
Protection against water / immersion	IPX0	IPX0
Ambient temperature	-40° C to +65° C	-40° C to + 70° C
Rapid change of temperature	-40° C bis +65° C / 25 cycles t=30 min	-40° C to +85° C / 25 cycles t=30 min
Climatic damp heat	-40°C / +65° C/ rhmax=85% / rhmin=20% / 21 cycles	
Electrical Characteristics		
Insertion loss	Singlemode: max. 0.5 dB; Multimode: max. 0.4 dB	Singlemode: max. 0.5 dB; Multimode: max. 0.4 dB
Return loss	min. 30 dB	min. 30 dB

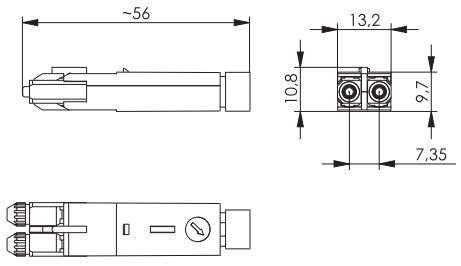

Order no.	Description	Connector type	Fiber type
F80083A0004	STX FO plug insert	2SC	Multimode
F80083A0005	STX FO plug insert	2SC	Multimode
F80083A0006	STX FO plug insert	2SC	POF
F80083A0007	STX FO plug insert	2SC	PCF

3.5

3.5 Variant 4

3.5.5 FO Plug Inserts LC Duplex Variant 4

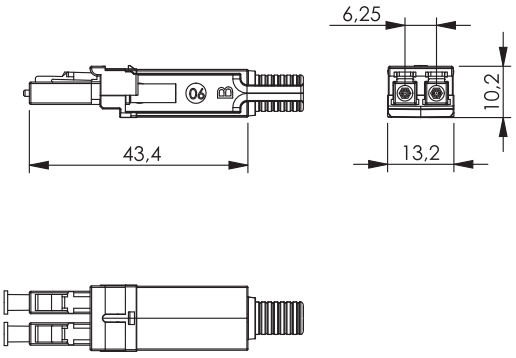

Order no.	Description	Connector type	Fiber type
F80073A0001	STX FO plug insert	LC Duplex	Singlemode
F80073A0000	STX FO plug insert	LC Duplex	Multimode

3.5.6 Plug Housings Variant 4

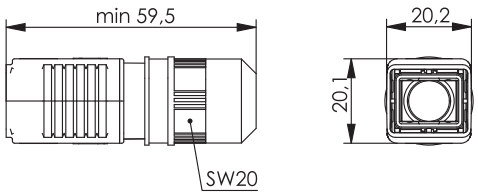

Order no.	Description	Housing	Remarks
H86011A0011	STX V4 plug housing	plastic	without bend protection

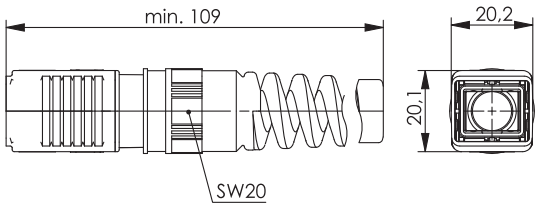

Order no.	Description	Housing	Remarks
H86011B0011	STX V4 plug housing	plastic	with bend protection

Protection Caps for Plugs Variant 4 — 3.5.7

Performance Characteristics

- plug protective cap for plug housing complying with IEC 61076-3-106 Variant 4 standards
- to protect plug inserts inside of plug housing
- protection class IP67 in combination with bulkhead protective cap
- flammability rating as per UL94 V0
- high resistance to chemicals
- captive, attached protective cap
- grip facility for pulling off
- push-pull locking

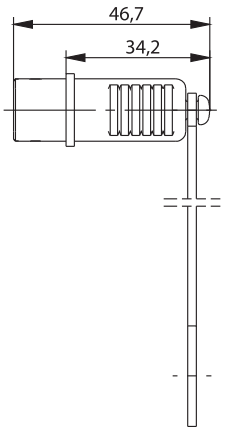

Order no.	Description	Remarks
H80030A0001	STX V4 plug protection cap	plastic

RJ45 Bulkhead Sets Variant 4 — 3.5.8

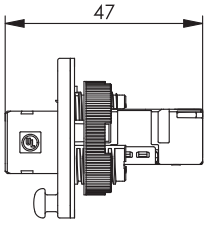

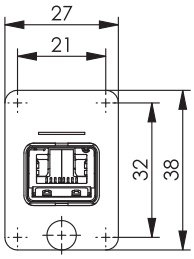

Order no.	Description	Insert	Mount. dim.
J80020A0005	STX V4 bulkhead set	RJ45 coupler Cat.6, suitable for Class E_A Channel	Z122; Z123; Z129

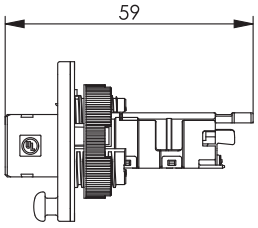

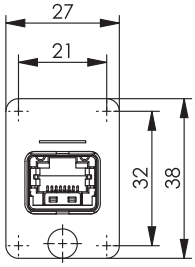

Order no.	Description	Insert	Mount. dim.
J80020A0004	STX V4 bulkhead set	RJ45 jack A Cat.6_A	Z122; Z123; Z129

3.5 Variant 4

3.5.9 FO Bulkhead Sets Variant 4

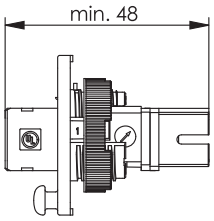

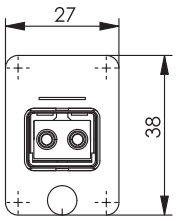

Order no.	Description	Fiber type	Insert	Mount. dim.
J88084A0001	STX V4 bulkhead set	Singlemode	2SC/SC-RJ adaptor	Z122; Z123; Z129
J88084A0000	STX V4 bulkhead set	Multimode	2SC/SC-RJ adaptor	Z122; Z123; Z129

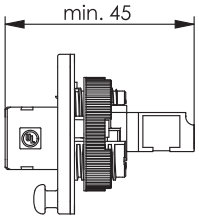

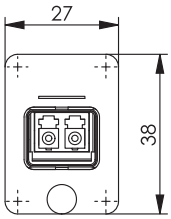

Order no.	Description	Fiber type	Insert	Mount. dim.
J88074A0001	STX V4 bulkhead set	Singlemode	LC Duplex adaptor	Z122; Z123; Z129
J88074A0000	STX V4 bulkhead set	Multimode	LC Duplex adaptor	Z122; Z123; Z129

3.5.10 RJ45 Bulkhead Inserts Variant 4

	STX RJ45 Jack	STX RJ45 Coupler
Standards		
Custom-designed cabling systems	ISO/IEC 11801; EN 50173-1; ISO/IEC 24702; IEC 61918	
Generic cabling systems	PROFINET Installation Guideline	PROFINET Installation Guideline
Connectors	IEC 60603-7-51	IEC 60603-7-5
Degrees of protection provided by enclosures (IP code)	IEC 60529	IEC 60529
Mechanical Characteristics		
Insertion force	≤ 30 N	≤ 30 N
Durability (mating cycles)	≥ 750	≥ 750
Material: jack housing	zinc diecast	zinc diecast
Material: housing finish	CuSnZn	nickel plated
Material: contacts	spring steel	spring steel
Material: contact finish	min. 0.8 µm Au on 1.2 µm Ni	min. 0.8 µm Au on 1.2 µm Ni
Material: shield	German silver	German silver
Material: contact IDC termination	CuNi2Si	-
Material: IDC termination finish	min. 3-6 µm Sn	-
Cu-Conductor diameter: stranded	0.46 - 0.76 mm AWG 27/7 - AWG 22/7	-
Cu-Conductor diameter: solid	0.41 - 0.64 mm AWG 26/1 - AWG 22/1	-
Core Diameter	0.9 - 1.6 mm	
Reusable IDC for AWG 22/1; AWG 22/7	≤4 cycles	
Reusable IDC für AWG 23/1 - AWG 26/1; AWG 24/7 - AWG 26/7	≤10 cycles	

	STX RJ45 Jack	STX RJ45 Coupler
Environmental Requirements		
Protection against particulate ingress	IP2X	IP2X
Protection against water / immersion	IPX0	IPX0
Ambient temperature	-40° C to + 70° C	-40° C to + 70° C
Rapid change of temperature	-40° C to + 70° C / 25 cycles t=30 min.	-40° C to + 70° C / 25 cycles t=30 min.
Climatic damp heat	+25° C / +65° C / 93% RH // -10° C / 21 cycles	
Flowing mixed gas	+25°C / 73% RH / 4 days, H_2S / SO_2	
Climatic Characteristics		
Temperature range [°C]	-40° C to 70° C	-40° C to 70° C
Electrical Characteristics		
Current carrying capacity at 50°C	1 A	1 A
PoE+ acc to IEEE 802.3at	fulfilled	fulfilled
Transmission Characteristics		
10 Gigabit Ethernet acc. to IEEE 802.3an	fulfilled	fulfilled
Category 6_A (Component)	ISO/IEC 11801, DIN EN 50173-1	-
Class E_A (Channel)	ISO/IEC 11801, DIN EN 50173-1	ISO/IEC 11801, DIN EN 50173-1

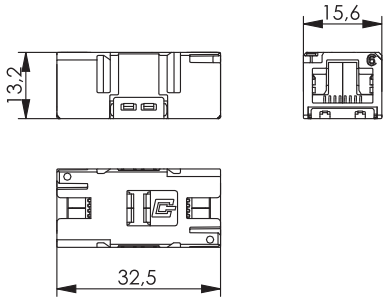

Order no.	Description	Remarks
J80029A0010	STX RJ45 coupler Cat.6 Class E_A	suitable for Class E_A Channel

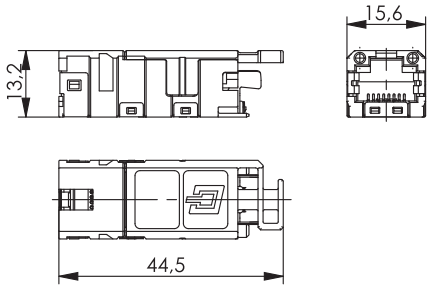

Order no.	Description	Colour coding
J80029A0000	STX RJ45 jack A Cat.6_A	TIA 568 A
J80029A0001	STX RJ45 jack B Cat.6_A	TIA 568 B
J80029A0002	STX RJ45 jack P Cat.6_A	PROFINET

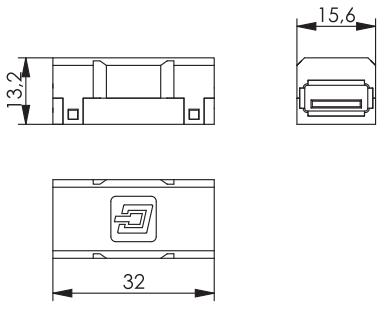

Order no.	Description	UL listed
J80029A0004	STX USB coupler 2.0 type A, f-f	
J80029A0011	STX USB coupler 2.0 type A-B, f-f	
J80029A0013	STX USB coupler 3.0 type A, f-f	E244889

3.5 Variant 4

3.5.11 FO Bulkhead Inserts 2SC/SC-RJ Variant 4

	Adaptor SC-RJ/2SC (MM)	Adaptor SC-RJ/2SC (SM)	Adaptor LC Duplex (MM)	Adaptor LC Duplex (SM)
Standards				
Generic cabling systems	ISO/IEC 11801; EN 50173-1; ISO/IEC 24702; IEC 61918			
Custom-designed cabling systems	PROFINET Installation Guideline		-	-
Connectors	similar to IEC 61754-24; similar to EN 50377-6		IEC 61754-20; EN 50377-7	
Fiber optic interconnecting devices and passive components- Basic test and measurement procedures	IEC 61300-2-x; IEC 61300-3-x	IEC 61300-2-x; IEC 61300-3-x	IEC 61300-2-x; IEC 61300-3-x	IEC 61300-2-x; IEC 61300-3-x
Degrees of protection provided by enclosures (IP code)	IEC 60529	IEC 60529	IEC 60529	IEC 60529
Mechanical Characteristics				
Insertion force	≤ 30 N	≤ 30 N	≤ 30 N	≤ 30 N
Durability (mating cycles)	≥ 500	≥ 500	≥ 500	≥ 500
Material: housing	PBT beige	PBT blue	PEI UL94 V0	PEI UL94 V0
Material: clamps	PBT beige	PBT blue	-	-
Material: frame	-	-	PBT beige	PBT blue
Material: split sleeve	phosphor bronze	zirconia	phosphor bronze	zirconia
Material: protection cap	TPE, black	TPE, black	PP	PP
Environmental Requirements				
Protection against particulate ingress	IP2X	IP2X	IP2X	IP2X
Protection against water / immersion	IPX0	IPX0	IPX0	IPX0
Ambient temperature	-40° C to +65° C			
Rapid change of temperature	-40° C to +65° C / 25 cycles t=30 min			
Climatic damp heat	-40°C / +65° C/ rhmax=85% / rhmin=20% / 21 cycles			
Flowing mixed gas	+25°C / 73% RH / 4 days, H_2S / SO_2			
Optical Characteristics				
Insertion loss	max. 0.4 dB	max. 0.5 dB	max. 0.4 dB	max. 0.5 dB
Return loss	min. 30 dB	min. 40 dB	min. 30 dB	min. 40 dB

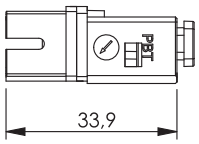

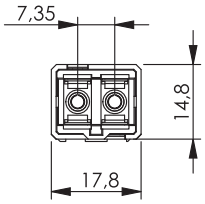

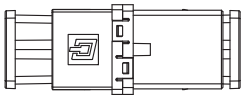

Order no.	Description	Connector type	Fiber type
F80084A0001	STX FO adaptor	2SC/SC-RJ	Singlemode
F80084A0000	STX FO adaptor	2SC/SC-RJ	Multimode

FO Bulkhead Inserts LC Duplex Variant 4 — 3.5.12

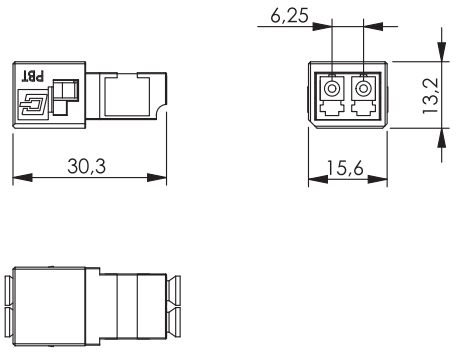

Order no.	Description	Connector type	Fiber type
F80074A0001	STX FO adaptor	LC Duplex	Singlemode
F80074A0000	STX FO adaptor	LC Duplex	Multimode

Bulkhead housings variant 4 — 3.5.13

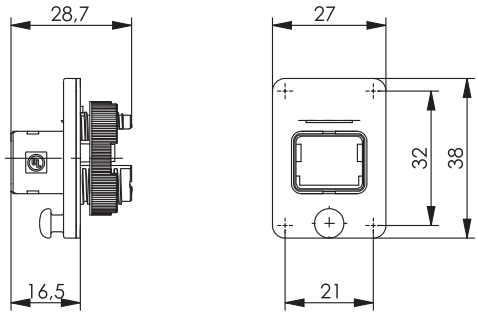

Order no.	Description	Housing	Mount. dim.
H86000A0002	STX V4 bulkhead	plastic	Z122; Z123; Z129

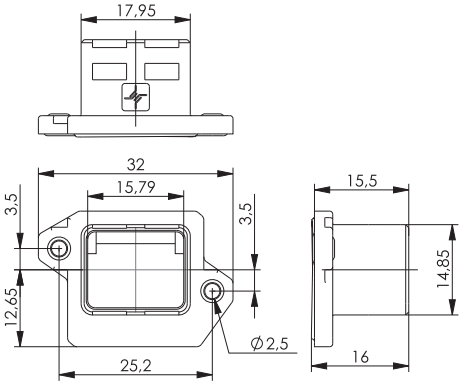

Order no.	Description	Remarks	Housing	Mount. dim.
H86000A0008	STX V4 bulkhead	for device integration	plastic	

3.5 Variant 4

3.5.14 Protection cap for Bulkhead Variant 4

Performance Characteristics

- bulkhead protective cap for bulkhead complying with IEC 61076-3-106 Variant 4 standards
- to protect bulkhead inserts inside of bulkhead
- protection class IP67 in combination with bulkhead
- protection class IP67 in combination with plug protective cap
- flammability rating as per UL94 V0
- high resistance to chemicals
- captive, attached protective cap
- grip facility for pulling off
- push-pull locking

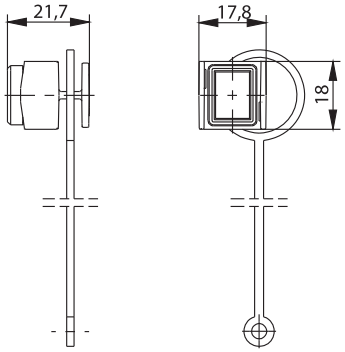

Order no.	Description	Remarks
H80030A0005	STX V4 bulkhead protection cap	plastic

3.5.15 Outlets with Bulkhead Variant 4

The specification of a Telecommunications Outlet (TO) is based on ISO/IEC 24702 which refers to ISO/IEC 11801. It is one of the functional elements of a generic cabling for industrial premises in areas subject to extreme ambient stresses due to temperature, dust, moisture or splashing water. For this purpose Telegärtner offers industrial outlets with mounted bulkheads of Variant 4. They are used to connect devices or complete automation islands. The unbreakable, powder-coated housings in RAL 7001 are available as single- or double gang versions in protection class IP67, allowing installation direct in manufacturing environments.

Performance Characteristics

- protection class IP67
- floor or wall mounting
- robust aluminium housing AL-Si 12
- powder-coated in RAL 7001
- available in 2 sizes, for 1 or 2 ports
- assembled with bulkhead Variant 4
- cable entry from the top or rightwards
- plastic cable glands M16
- including IP67 bulkhead protective cap

	STX Outlet Metal	STX Outlet Plastic
Standards		
Connectors	IEC 61076-3-106	IEC 61076-3-106
Degrees of protection provided by enclosures (IP code)	IEC 60529	IEC 60529
Mechanical Characteristics		
Material: O-ring	-	NBR (silicone free)
Material: housing	aluminium, grey coated	PA UL94 V0
Material: screws to fix the cover of housing	Stainless steel	-
Material: gaskets	CR, black	-
Material: ground connection	Stainless steel	-
Material: cable gland	brass, PA	-
Environmental Requirements		
Protection against particulate ingress	IP6X	IP6X
Protection against water / immersion	IPX7	IPX7
Ambient temperature	-40° C to + 70° C	-40° C to + 70° C
Rapid change of temperature	-40° C to + 70° C / 25 cycles t=30 min.	
Climatic damp heat	+25° C / +65° C / 93% RH // -10° C / 21 cycles	
Neutral salt spray test	+35° C / 4 days; 5% NaCl	

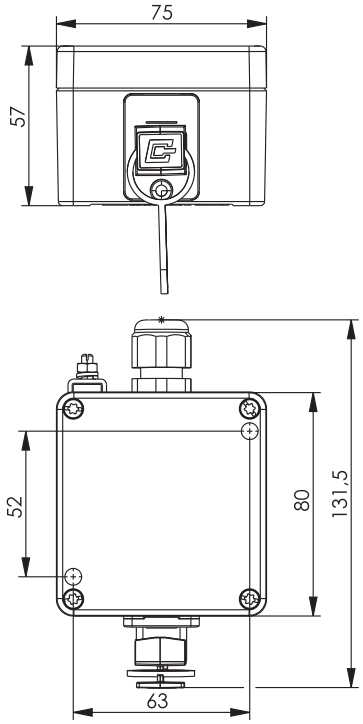

Order no.	Description	Type	Cable feed	Housing	Protection class	Size in mm
H82000A0000	STX V4 Surface mounting box	single gang	vertical	metal	IP67	LxBxH= 75x80x57

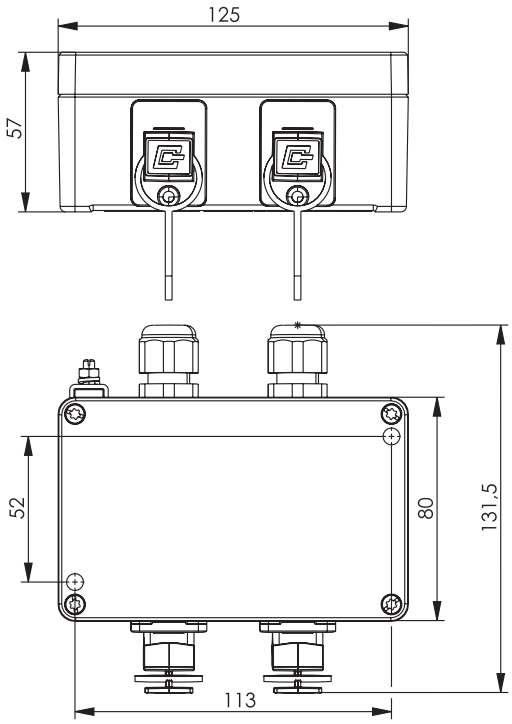

Order no.	Description	Type	Cable feed	Housing	Protection class	Size in mm
H82000A0002	STX V4 Surface mounting box	double gang	vertical	metal	IP67	LxBxH= 125x80x57

3.5 Variant 4

3.5.15 Outlets with Bulkhead Variant 4

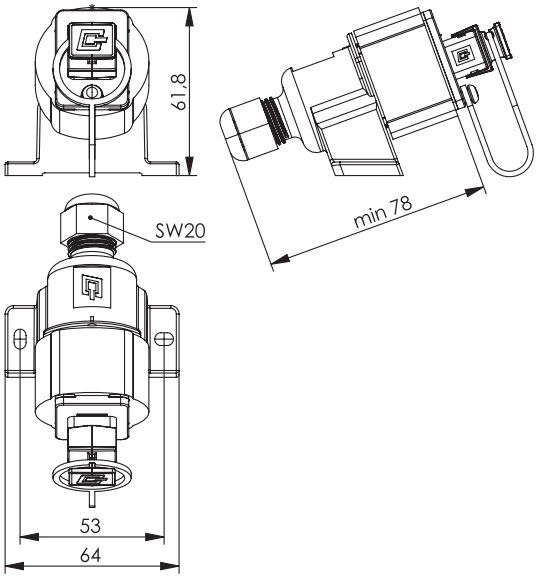

REAL-TIME RE-EMBEDDED

Cat.6A

Order no.	Description	Housing	Insert	Remarks	Protection class
J80023A0010	STX V4 surface mounting outlet	plastic	RJ45 jack A Cat.6_A	including bulkhead protective cap	IP67
J80023A0011	STX V4 surface mounting outlet	plastic	RJ45 jack B Cat.6_A	including bulkhead protective cap	IP67

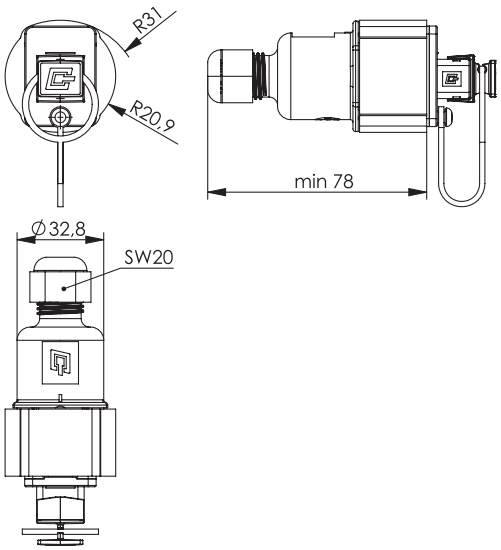

REAL-TIME RE-EMBEDDED

Cat.6A

Order no.	Description	Housing	Insert	Remarks	Protection class
J80023A0013	STX V4 free coupling outlet	plastic	RJ45 jack A Cat.6_A	including bulkhead protective cap	IP67
J80023A0014	STX V4 free coupling outlet	plastic	RJ45 jack B Cat.6_A	including bulkhead protective cap	IP67

Variant 5 — 3.6

The Connectors of Variant 5 (Heavy Duty Connector), mostly common from the railway supply industry, wind power and mechanical engineering feature a secure and easy locking using a bail. The connectors of Variant 5 are standardized in the IEC 61076-3-106, designed to meet the demands of harsh industrial environments, guaranteeing protection class IP67 whether mated or unmated (using the IP67 protection cap).

Furthermore, the modular principle - which is used on all connectors with STEADYTEC®-Technology - allows us to offer a wide range of products. Benefit from maximum flexibility and choose the insert you need! The RJ45 plug and bulkhead inserts stand out due to high power reserves and offer transmission characteristics of Class E_A acc. to ISO/IEC 11801.

Performance Characteristics

- Variant 5 acc. to IEC 61076-3-106
- protection class IP67
- rugged aluminium diecast housing
- storage of cables with diameter 5...10 mm
- pre-assembled plugs and set products for simple assembly
- simple mounting of bulkheads with 2 screws
- NBR aiguilette at the protection cap

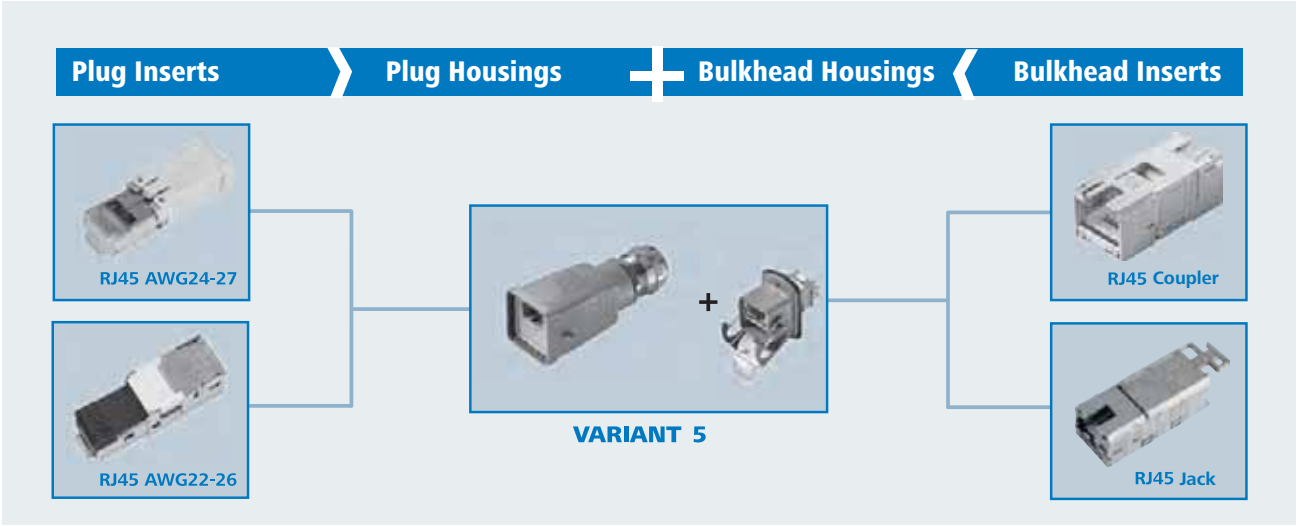

RJ45 Plug Sets Variant 5 — 3.6.1

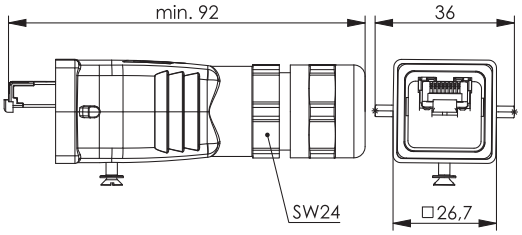

Order no.	Description	Solid/Stranded	Housing
J80026A0017	STX V5 RJ45 plug set Cat.6_A	AWG24-27	aluminium diecast

3.6 Variant 5

3.6.1 RJ45 plug sets variant 5

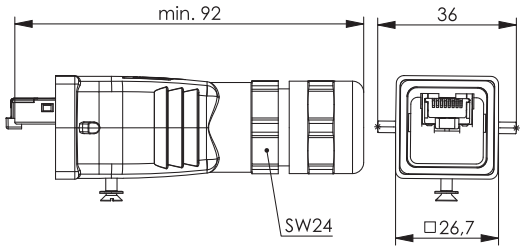

Order no.	Description	Solid/Stranded	Housing	Remarks
J80026A0018	STX V5 RJ45 plug set Cat.6 Class E_A	AWG22-26	aluminium diecast	field assembly

3.6.2 RJ45 Plug Inserts Variant 5

	Plug Insert AWG24-27	Plug Insert AWG22-26
Standards		
Custom-designed cabling systems	-	PROFINET Installation Guideline
Generic cabling systems	ISO/IEC 11801; EN 50173-1; ISO/IEC 24702; IEC 61918	
Connectors	IEC 60603-7-51	IEC 60603-7-5
Degrees of protection provided by enclosures (IP code)	IEC 60529	IEC 60529
Mechanical Characteristics		
Insertion force	≤ 30 N	≤ 30 N
Durability (mating cycles)	≥ 750	≥ 750
Material: connector housing	PC UL94 V0 crystal clear	zinc diecast, nickel plated
Material: contacts	phosphor bronze	tin bronze
Material: contact finish	min. 0.8 µm Au on 2.54 µm Ni	min. 0.8 µm Au on 2.54 µm Ni
Material: contact IDC termination	-	tin bronze
Material: IDC termination finish	-	tin plated
Material: shield	0.5 mm brass	German silver
Material: shield finish	2 µm Ni	-
Cu-Conductor diameter: stranded	0.46 - 0.61 mm AWG 27/7 - AWG 24/7	0.48 - 0.76 mm AWG 26/7 - AWG 22/7
Cu-Conductor diameter: solid	0.36 - 0.51 mm AWG 27/1 - AWG 24/1	0.41 - 0.64 mm AWG 26/1 - AWG 22/1
Core Diameter	0.85 - 1.05 mm	0.85 - 1.6 mm
Cable diameter	5.0 - 7.3 mm	5.5 - 8.5 mm
Environmental Requirements		
Protection against particulate ingress	IP2X	IP2X
Protection against water / immersion	IPX0	IPX0
Ambient temperature	-40° C to + 70° C	-40° C to + 70° C
Rapid change of temperature	-40° C to + 70° C / 25 cycles t=30 min.	-40° C to + 70° C / 25 cycles t=30 min.
Climatic damp heat	+25° C / +65° C / 93% RH // -10° C / 21 cycles	
Flowing mixed gas	+25°C / 73% RH / 4 days, H_2S / SO_2	
Climatic Characteristics		
Temperature range [°C]	-40° C to 70° C	-40° C to 70° C
Electrical Characteristics		
Current carrying capacity at 50°C	1 A	1 A
PoE+ acc to IEEE 802.3at	fulfilled	fulfilled
Transmission Characteristics		
10 Gigabit Ethernet acc. to IEEE 802.3an	fulfilled	fulfilled
Category 6_A (Component)	ISO/IEC 11801, DIN EN 50173-1	-
Class E_A (Channel)	ISO/IEC 11801, DIN EN 50173-1	ISO/IEC 11801, DIN EN 50173-1

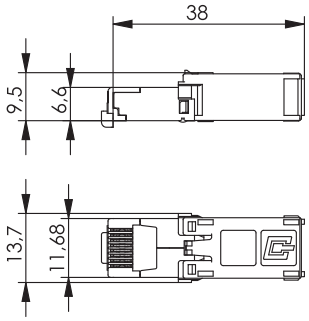

Order no.	Description	Solid/Stranded
J80026A0002	STX RJ45 plug insert Cat.6_A	AWG24-27

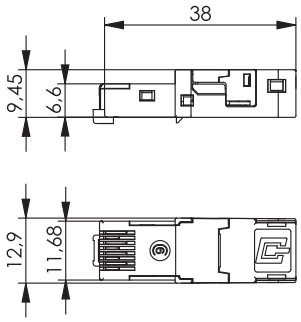

Order no.	Description	Solid/Stranded	Remarks
J80026A0004	STX RJ45 plug insert Cat.6 Class E_A	AWG22-26	field assembly

Plug Housings Variant 5 — 3.6.3

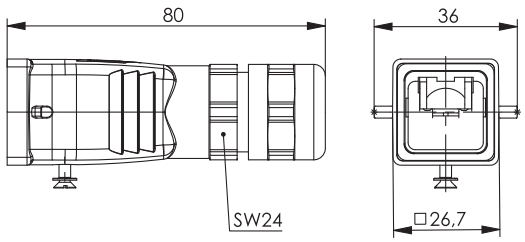

Order no.	Description	Housing
H86010A0001	STX V5 plug housing	aluminium diecast

3.6

3.6 Variant 5

3.6.4 Protection Cap for Plugs Variant 5

Performance Characteristics

- plug protective cap for plug housing complying with IEC 61076-3-106
- to protect plug inserts inside of plug housing
- protection class IP67 in combination with bulkhead protective cap
- protection class IP67 in combination with plug housing
- flammability rating as per UL94 V0
- high resistance to chemicals
- captive, attached protective cap
- clip lock

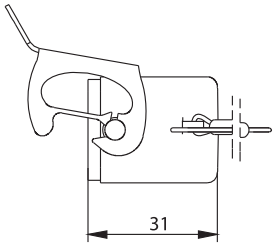

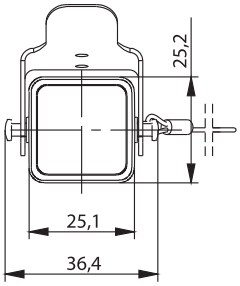

Order no.	Description	Housing
H80030A0002	STX V5 plug protection cap	aluminium diecast

3.6.5 RJ45 Bulkhead Sets Variant 5

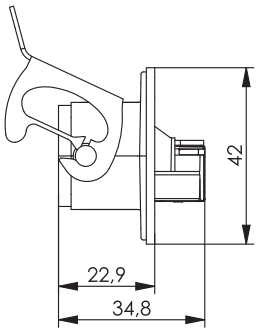

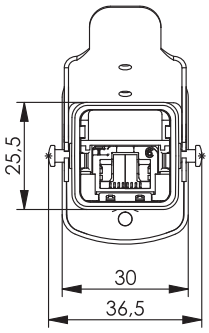

Order no.	Description	Insert	Housing	Mount. dim.
J80020A0007	STX V5 bulkhead set	RJ45 coupler Cat.6, suitable for Class E_A Channel	aluminium diecast	Z126

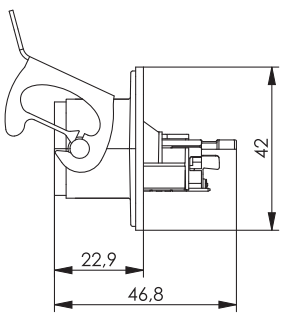

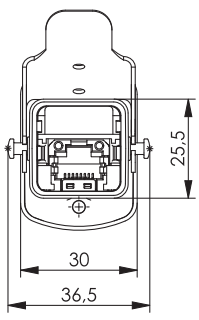

Order no.	Description	Insert	Housing	Mount. dim.
J80020A0006	STX V5 bulkhead set	RJ45 Modul A Cat.6_A	aluminium diecast	Z126

RJ45 Bulkhead Inserts Variant 5

3.6.6

	STX RJ45 Jack	STX RJ45 Coupler
Standards		
Custom-designed cabling systems	ISO/IEC 11801; EN 50173-1; ISO/IEC 24702; IEC 61918	
Generic cabling systems	PROFINET Installation Guideline	PROFINET Installation Guideline
Connectors	IEC 60603-7-51	IEC 60603-7-5
Degrees of protection provided by enclosures (IP code)	IEC 60529	IEC 60529
Mechanical Characteristics		
Insertion force	≤ 30 N	≤ 30 N
Durability (mating cycles)	≥ 750	≥ 750
Material: jack housing	zinc diecast	zinc diecast
Material: housing finish	CuSnZn	nickel plated
Material: contacts	spring steel	spring steel
Material: contact finish	min. 0.8 µm Au on 1.2 µm Ni	min. 0.8 µm Au on 1.2 µm Ni
Material: shield	German silver	German silver
Material: contact IDC termination	CuNi2Si	-
Material: IDC termination finish	min. 3-6 µm Sn	-
Cu-Conductor diameter: stranded	0.46 - 0.76 mm AWG 27/7 - AWG 22/7	-
Cu-Conductor diameter: solid	0.41 - 0.64 mm AWG 26/1 - AWG 22/1	-
Core Diameter	0.9 - 1.6 mm	
Reusable IDC for AWG 22/1; AWG 22/7	≤4 cycles	
Reusable IDC für AWG 23/1 - AWG 26/1; AWG 24/7 - AWG 26/7	≤10 cycles	
Environmental Requirements		
Protection against particulate ingress	IP2X	IP2X
Protection against water / immersion	IPX0	IPX0
Ambient temperature	-40° C to + 70° C	-40° C to + 70° C
Rapid change of temperature	-40° C to + 70° C / 25 cycles t=30 min.	-40° C to + 70° C / 25 cycles t=30 min.
Climatic damp heat	+25° C / +65° C / 93% RH // -10° C / 21 cycles	
Flowing mixed gas	+25°C / 73% RH / 4 days, H_2S / SO_2	
Climatic Characteristics		
Temperature range [°C]	-40° C to 70° C	-40° C to 70° C
Electrical Characteristics		
Current carrying capacity at 50°C	1 A	1 A
PoE+ acc to IEEE 802.3at	fulfilled	fulfilled
Transmission Characteristics		
10 Gigabit Ethernet acc. to IEEE 802.3an	fulfilled	fulfilled
Category 6_A (Component)	ISO/IEC 11801, DIN EN 50173-1	-
Class E_A (Channel)	ISO/IEC 11801, DIN EN 50173-1	ISO/IEC 11801, DIN EN 50173-1

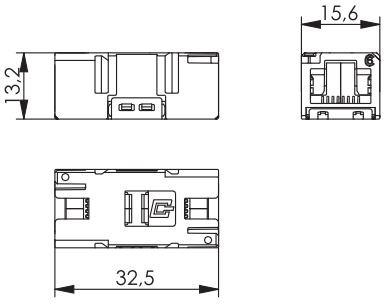

Order no.	Description	Remarks
J80029A0010	STX RJ45 coupler Cat.6 Class E_A	suitable for Class E_A Channel

3.6

3.6 Variant 5

3.6.6 RJ45 Bulkhead Inserts Variant 5

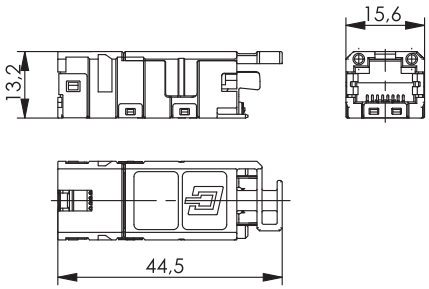

Order no.	Description	Colour coding
J80029A0000	STX RJ45 jack A Cat.6_A	TIA 568 A
J80029A0001	STX RJ45 jack B Cat.6_A	TIA 568 B
J80029A0002	STX RJ45 jack P Cat.6_A	PROFINET

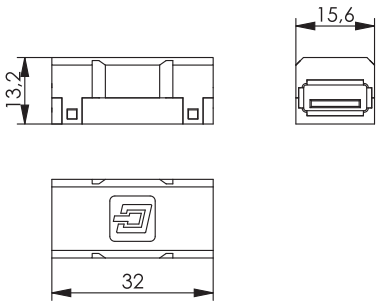

Order no.	Description
J80029A0004	STX USB coupler 2.0 type A, f-f
J80029A0011	STX USB coupler 2.0 type A-B, f-f
J80029A0013	STX USB coupler 3.0 type A, f-f

3.6.7 Bulkhead Housings Variant 5

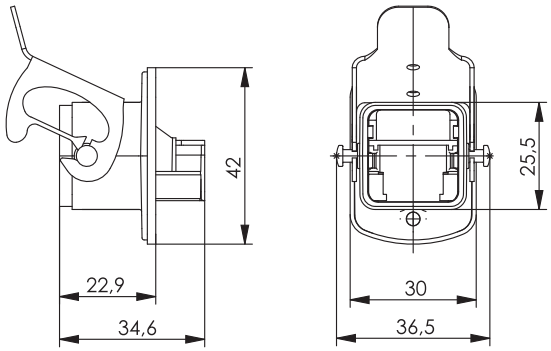

Order no.	Description	Housing	Mount. dim.
H86000A0003	STX V5 bulkhead	aluminium diecast	Z126

Protection Cap for Bulkhead Variant 5 — 3.6.8

Performance Characteristics

- bulkhead protective cap for bulkhead complying with IEC 61076-3-106
- to protect bulkhead inserts inside of bulkhead
- protection class IP67 in combination with bulkhead
- protection class IP67 in combination with plug protective cap
- flammability rating as per UL94 V0
- high resistance to chemicals
- captive, attached protective cap
- clip lock

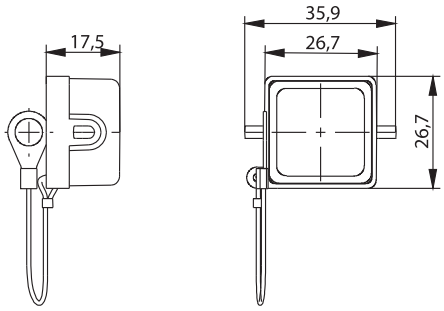

Order no.	Description	Housing
H80030A0006	STX V5 bulkhead protection cap	aluminium diecast

Outlets with Bulkhead Variant 5 — 3.6.9

The Telecommunications Outlet (TO) is one of the functional elements of a generic cabling for industrial premises in areas subject to extreme ambient stresses due to temperature, dust, moisture or splashing water. For this purpose Telegärtner offers industrial outlets with mounted bulkheads of Variant 5. They are used to connect devices or complete automation islands. The unbreakable, powder-coated housings in RAL 7001 are available as single- or double gang versions in protection class IP67, allowing installation direct in manufacturing environments.

Performance Characteristics

- protection class IP67
- floor or wall mounting
- robust aluminium housing AL-Si 12
- powder coated in RAL 7001
- available in 2 sizes, for 1 or 2 ports
- cable entry from the top or rightwards
- nickel plated brass cable glands M16
- including IP67 bulkhead protective cap

Standards	
Connectors	IEC 61076-3-106
Degrees of protection provided by enclosures (IP code)	IEC 60529
Mechanical Characteristics	
Material: housing	aluminium, grey coated
Material: screws to fix the cover of housing	Stainless steel
Material: gaskets	CR, black
Material: ground connection	Stainless steel
Material: cable gland	brass, PA
Environmental Requirements	
Protection against particulate ingress	IP6X
Protection against water / immersion	IPX7
Ambient temperature	-40° C to + 70° C
Rapid change of temperature	-40° C to + 70° C / 25 cycles t=30 min.
Climatic damp heat	+25° C / +65° C / 93% RH // -10° C / 21 cycles
Neutral salt spray test	+35° C / 4 days; 5% NaCl

3.6 Variant 5

3.6.9 Outlets with Bulkhead Variant 5

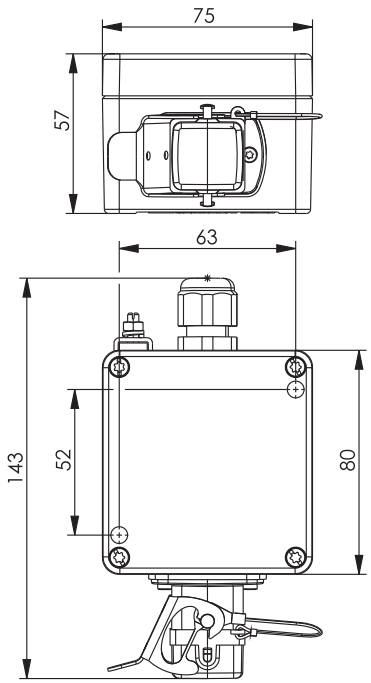

Order no.	Description	Type	Cable feed	Housing	Protection class	Size in mm
H82000A0003	STX V5 Surface mounting box	single gang	vertical	metal	IP67	LxBxH= 75x80x57

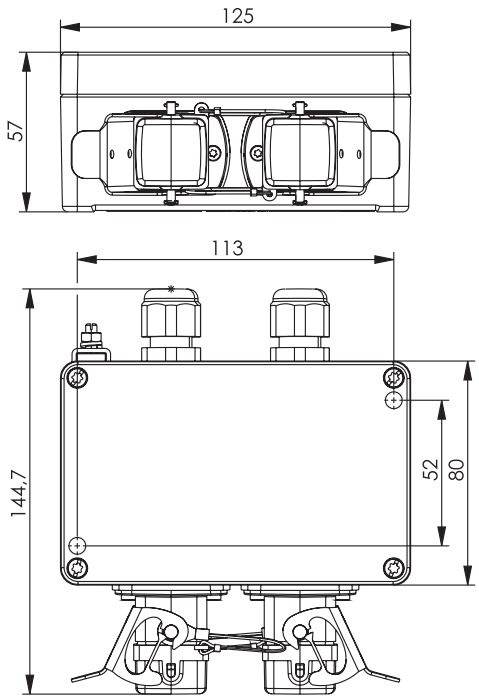

Order no.	Description	Type	Cable feed	Housing	Protection class	Size in mm
H82000A0005	STX V5 Surface mounting box	double gang	vertical	metal	IP67	LxBxH= 125x80x57

Variant 6

Connectors for modern industrial applications need to be designed in such a way that they simplify processes and cope with faster data transmission. Telegärtner recommends the connectors of Variant 6 for genericcabling of factory automation machinery (Automation Island) acc. IEC 61918 and fieldbus installation acc. to IEC 61784-5 in a robust plastic design. The connectors of Variant 6 (Interbus RTE) are standardized in the IEC 61076-3-106, designed to meet the demands of harsh industrial environments, guaranteeing protection class IP67 when mated. The locking clasps allow easy, tool-less opening as well as a secure locking with protection class IP67. The RJ45 plug and bulkhead inserts stand out due to high power reserves and offer transmission characteristics of Class E_A acc. to ISO/IEC 11801.

	RJ45 Plug Set AWG24-27 Cat.6_A	Outlets RJ45 Cat.6 Class E_A	Bulkhead Set AMJ Module K Cat.6_A	Bulkhead Set AMJ Coupler K Cat.6
Standards				
Generic cabling systems	ISO/IEC 11801; EN 50173-1; ISO/IEC 24702; IEC 61918			
Connectors	IEC 60603-7-51; IEC 61076-3-106			
Degrees of protection provided by enclosures (IP code)	IEC 60529	IEC 60529	IEC 60529	IEC 60529
Mechanical Characteristics				
Insertion force	≤ 100 N	≤ 100 N	≤ 100 N	≤ 100 N
Durability (mating cycles)	≥ 750	≥ 750	≥ 750	≥ 750
Material: housing	PA6 UL94 V0	PA6 UL94 V0	PA6 UL94 V0	PA6 UL94 V0
Material: protective cap	-	PA6 UL94 V0	PA6 UL94 V0	PA6 UL94 V0
Material: O-ring	HNBR	-	HNBR	HNBR
Matrial:	-	-	NBR	NBR
Material: jack housing	-	zinc diecast	zinc diecast	zinc diecast
Material: connector housing	PC UL94 V0	-	-	-
Material: contacts	phosphor bronze	CuSn	spring steel	spring steel
Material: contact (finish)	min. 0.8 µm Au on 2.54 µm Ni			
Material: shield	0.5 mm brass, 2 µm Ni	German silver	German silver	German silver
Cu-Conductor diameter: solid	0.40 - 0.51 mm AWG 26/1 - AWG 24/1	0.41 - 0.64 mm AWG 26/1 - AWG 22/1	0.40 - 0.65 mm AWG 26/1 - AWG 22/1	-
Cu-Conductor diameter: stranded	0.46 - 0.61 mm AWG 27/7 - AWG 24/7	0.48 mm AWG 26/7	0.46 - 0.61 mm AWG 27/7 - AWG 24/7	-
Core Diameter	0.85 - 1.05 mm	0.9 - 1.6 mm	0.9 - 1.6 mm	-
Cable diameter	5.0 - 7.3 mm	5.0 - 10.0 mm	5.0 - 10.0 mm	-
Reusable IDC for AWG 22/1; AWG 22/7	-	≤4 cycles	≤4 cycles	-
Reusable IDC für AWG 23/1 - AWG 26/1; AWG 24/7 - AWG 26/7		≤10 cycles	≤10 cycles	
Environmental Requirements				
Protection against particulate ingress	IP6X	IP6X	IP6X	IP6X
Protection against water / immersion	IPX7	IPX7	IPX7	IPX7
Ambient temperature	-40° C to + 70° C			
Rapid change of temperature	-40° C to + 70° C / 25 cycles t=30 min.			
Climatic damp heat	+25° C / +65° C / 93% RH // -10° C / 21 cycles			
Flowing mixed gas	+25°C / 73% RH / 4 days, H_2S / SO_2			
Electrical Characteristics				
Current carrying capacity at 50°C	1 A	1 A	1 A	1 A
PoE according to IEEE802.3af	Adequate for Power over Ethernet+			
Transmission Characteristics				
Category 6_A	-	-	ISO/IEC 11801, DIN EN 50173-1	
10 Gigabit Ethernet acc. to IEEE 802.3an	fulfilled	fulfilled	fulfilled	fulfilled
Category 6_A (Component)	ISO/IEC 11801, DIN EN 50173-1		-	-
Class E_A (Permanent Link)	ISO/IEC 11801, DIN EN 50173-1			
Class E_A (Channel)	-	-	ISO/IEC 11801, DIN EN 50173-1	

3.7 Variant 6

3.7.1 RJ45 Plug Set Variant 6

Performance Characteristics

- Variant 6 acc. to IEC 61076-3-106
- connector for Automation Island acc. to IEC 61918
- 8-way contact for 10 Gigabit-Ethernet
- locking clasp to prevent accidental detachment
- 360° shield connection
- inner and outer conductor crimped in one single operation using the profi crimping tool N00001A0002
- fire rating UL94 V0
- protection class IP67

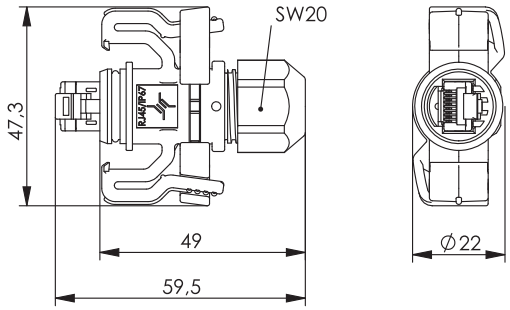

Order no.	Short name	Remarks
J00026A0150	STX V6 RJ45 plug set Cat.6_A	AWG24-27

3.7.2 Bulkhead Sets Variant 6

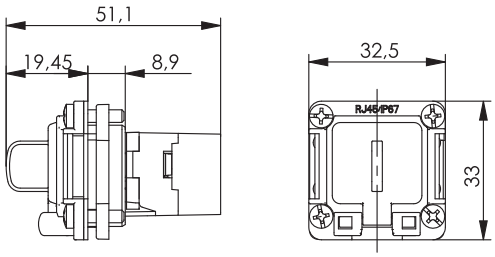

Order no.	Short name	Remarks
J00020A0480	STX V6 bulkhead set with USB-Keystone Type A, f-f	with mounting set

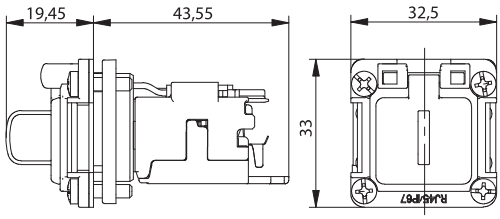

Order no.	Short name	Remarks
J00020A0481	STX V6 Bulkhead with AMJ module K Cat.6_A	with mounting set

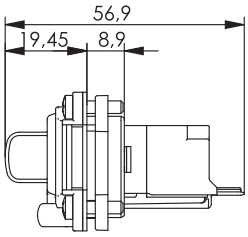

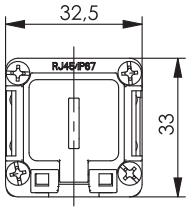

Order no.	Short name	Remarks
J00020A0482	STX V6 Bulkhead with AMJ coupler K Cat.5e	with mounting set
J00020A0483	STX V6 Bulkhead with AMJ coupler K Cat.6, suitable for Class E_A Channel	with mounting set

Bulkheads IP67 Variant 6 3.7.3

For direct connection to the exterior device housing, Telegärtner offers a bulkhead version with AMJ Modules Cat. 6_A and AMJ Couplers Cat.6 and Cat.5e. They are optionally available with an installation set which offers professional, time-saving and simple bulkhead installation. The zinc die cast frame, equipped with M3 threaded holes is screwed to the opposite side of the installation flange on the installation surface (screws are included in the delivery). This creates a tight and secure fit, with protection class IP67. The device can be made operational by simply snapping in the modules required. No tooling is necessary.

Performance Characteristics

- Variant 6 acc. to IEC 61076-3-106
- connector for Automation Island acc. to IEC 61918
- protection class IP67 when mated with STX V6 RJ45 plug
- non-detachable cover ensures protection class IP67 seal (unmated)
- simple and time-saving assembly with 4 screws
- tool-free mounting (snap-in) of the AMJ Modules and Couplers
- little space required for high packing density
- connection of commercially available RJ45 plugs is possible (IP20 protection)

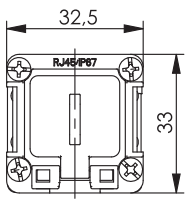

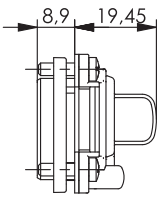

Montageausschnitt
faceplate cut

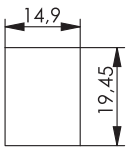

Order no.	Short name	Remarks	Mount. dim.
J00029A0040	STX V6 Bulkhead with mounting set	for AMJ modules/coupler	Z115

3.7 Variant 6

3.7.3 Bulkheads IP67 Variant 6

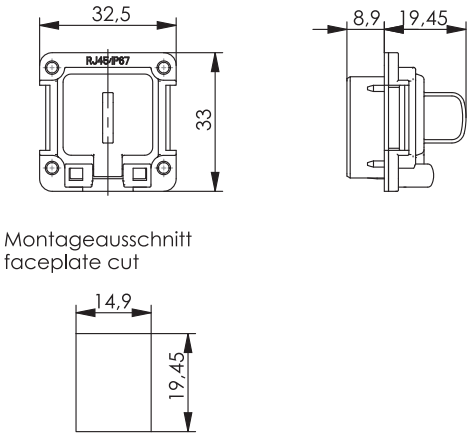

Order no.	Short name	Remarks	Mount. dim.
J00029A0042	STX V6 Bulkhead without mounting set	for AMJ modules/coupler	Z115

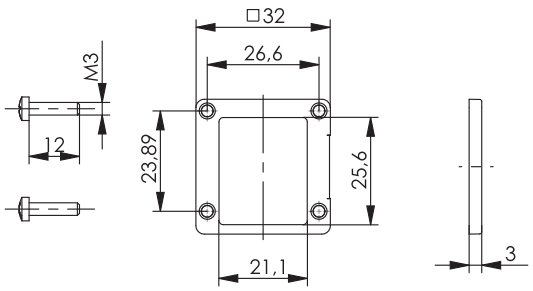

Order no.	Short name	Mount. dim.
J00029A0039	Mounting set for STX V6 Bulkhead (J00029A0042)	Z115

Cat.6A AMJ REAL-TIME RE-EMBEDDED

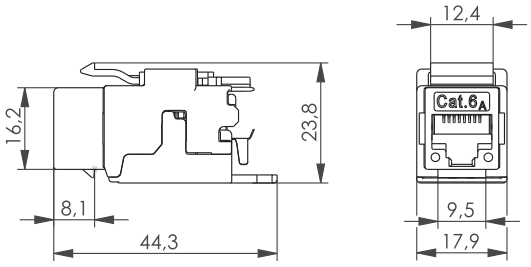

Order no.	Short name	Remarks	Mount. dim.
J00029K0036	AMJ Module K Cat.6$_A$ T568A	tool-free connectivity, suitable for RJ45/11/12 plugs	Z121

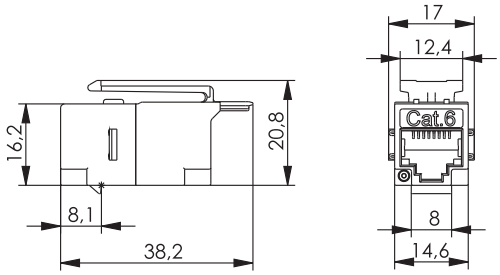

Order no.	Short name	Description	Remarks	Mount. dim.
J00029A0061	AMJ Coupler K Cat.6, f-f	suitable for Class E_A Channel, 10 Gigabit Ethernet	suitable for RJ45/11/12 plugs	Z121
J00029K0051	AMJ Coupler K Cat.5e, f-f	suitable for Class E Channel, 1 Gigabit Ethernet	suitable for RJ45/11/12 plugs	Z121

STX V6 Outlet Cat.6 3.7.4

Performance Characteristics

- Variant 6 acc. to IEC 61076-3-106
- connector for Automation Island acc. to IEC 61918
- 8-way contact for 10 Gigabit-Ethernet
- large surface 360° screen connection
- non-detachable cover ensures protection class IP67 seal (unmated)
- easily opened, re-usable modules
- fire rating UL94 V0
- mating face mountable in two directions set at 90° to each other
- can be used together with standard RJ45 plugs (no IP protection)

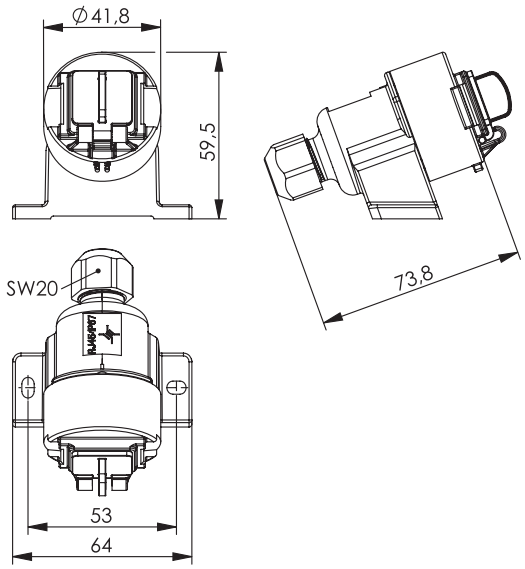

Order no.	Short name	Remarks
J00020A0436	STX V6 surface mounting outlet Cat.6_A	Fire rating UL94 V0

3.7

3.7 Variant 6

3.7.4 STX V6 Outlet Cat.6

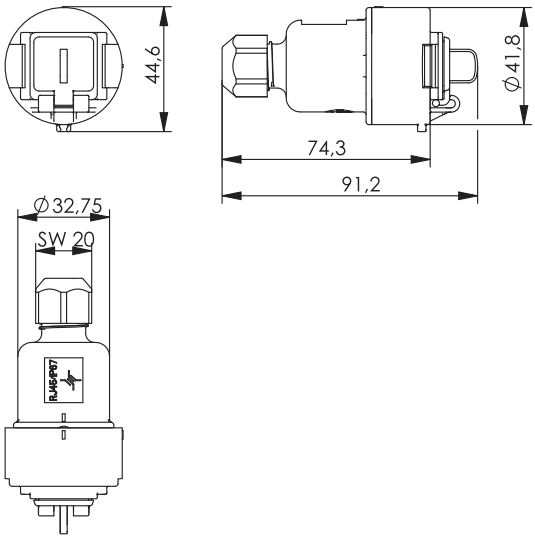

Order no.	Short name	Remarks
J00020A0437	STX V6 free coupling outlet Cat.6_A	Fire rating UL94 V0

3.7.5 RJ45 and FO Outlet IP66 Surface Mounting

The specification of a Telecommunications Outlet (TO) is based on ISO/IEC 24702, for installation of data outlets in areas subject to extreme ambient stresses due to temperature, dust, moisture or splashing water. The IP66 surface-mount housing from Telegärtner is used to connect devices or complete automation islands; 2 FO or RJ45 outlets can be placed in the unbreakable housing (colour: RAL 7035, protection class IP66), allowing installation direct in manufacturing environments. Its compact size of 110x110x69 mm also permits space-saving installations.

Performance Characteristics

- Degree of Protection IP66
- alternatively 1 or 2 connections with SC Duplex adaptors or RJ45 Modules/Adaptors
- M20 cable gland
- connection of 2x SC-Simplex or 1x SC-RJ connector resp. RJ45 IP67 or RJ45 IP20 plug
- Little space required for surface mounting, dimensions: 110x110x69 mm

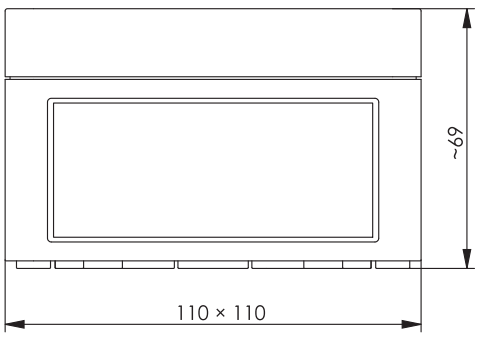

Order no.	Short name	Remarks	Colour
H02050A0097	Surface mounting box IP66	without flange, without piercing	RAL 7035

To simplify enquiry and ordering procedures for IP66 surface-mount outlets, order specifications are available from Telegärtner as print masters or Excel tables. They can be used to produce any desired combination with RJ45 and/or FO inserts. These order specifications can be downloaded under the menu option „Downloads and Tools“ on our homepage www.telegaertner.com.

Order no.	Description	Remarks
H01012A0050	cable gland M20 for cable dia. 7 - 13.5 mm	Polyamide PA6, grey

Order no.	Short name
U01010A0011	Punch hole and assembly for mounting flange RJ45 IP67 (without flange)

3.8 Variant 14

For the installation of data networks as per IEC 61918, IEC 61784-5 and PROFINET system guide, Telegärtner recommends for harsh environments the Push-Pull connector of Variant 14 acc. to IEC 61076-3-117. Moreover this connector series is compliant to the requirements of AIDA (Automation Initiative of the German Automotive Industry) guaranteeing protection class IP67. The modular principle - which is used on all connectors with STEADYTEC®-Technology - allows us to offer a wide range of products. Benefit from maximum flexibility and choose the insert you need! The RJ45 inserts stand out due to high power reserves and offer transmission characteristics up to 10 Gbit Ethernet. The FO plug and bulkhead inserts are available for GOF and POF/PCF fibres and provide the most suitable solution for every application.

Performance Characteristics

- Variant 14 acc. to IEC 61076-3-1117
- protection class IP67
- available with RJ45 Cat.6_A, Cat.6 Class E_A, USB or FO insert
- rugged zinc-diecast housing, nickel plated
- plug housing suitable for cables with diameter 5-10 mm
- pre-assembled plugs and set products for simple assembly
- bulkhead version having round cutout for central screw mounting
- bulkhead version having rectangular cutout for mounting with M3 screws
- NBR aiguilette at the protection cap
- bay for marking labels

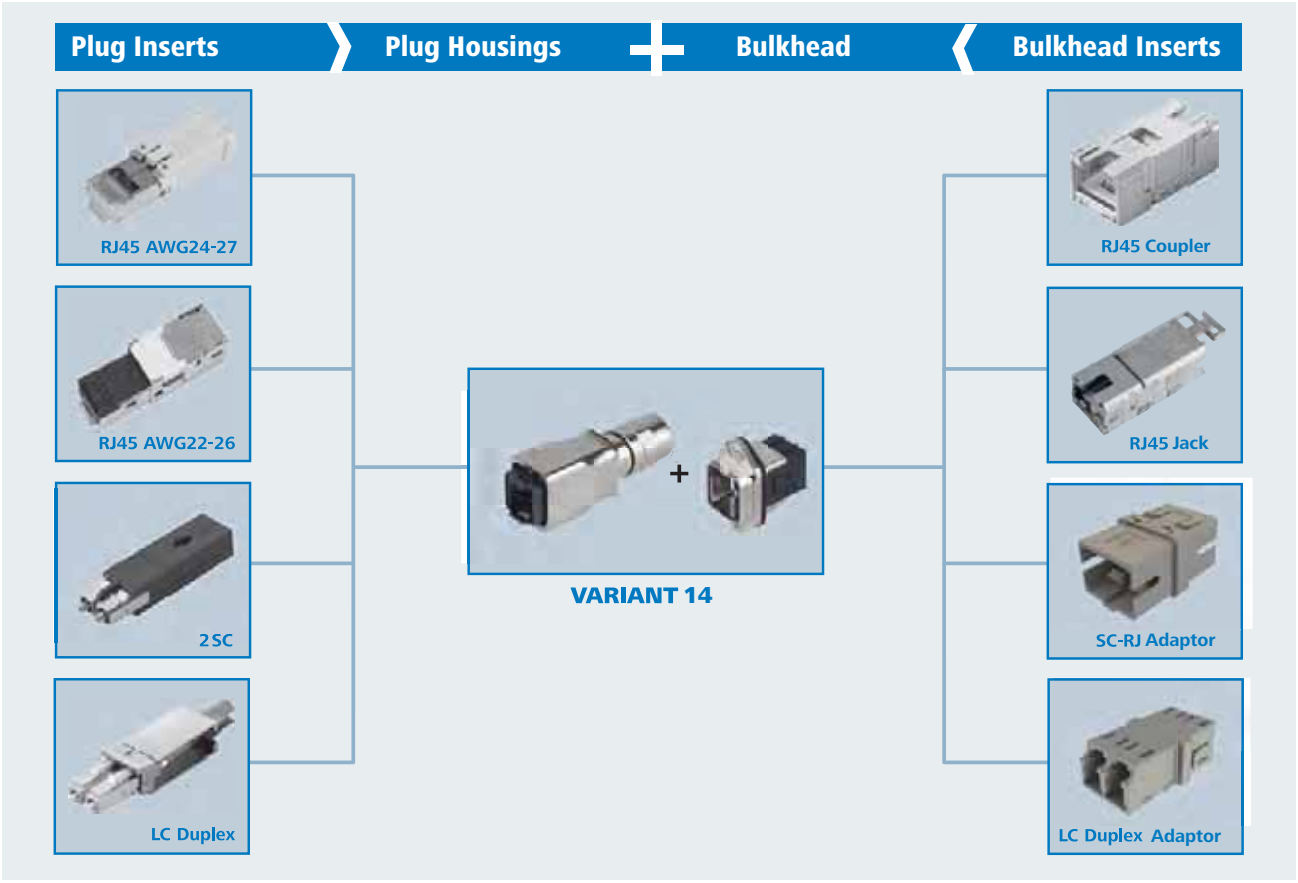

RJ45 Plug Sets Variant 14 — 3.8.1

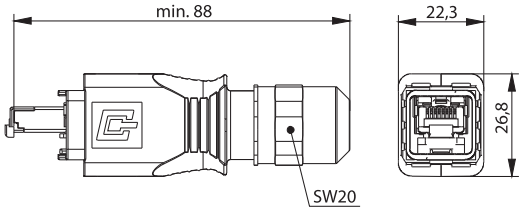

Order no.	Description	Solid/Stranded	Housing	Remarks
J80026A0019	STX V14 RJ45 plug set Cat.6_A	AWG24-27	metal	without bend protection

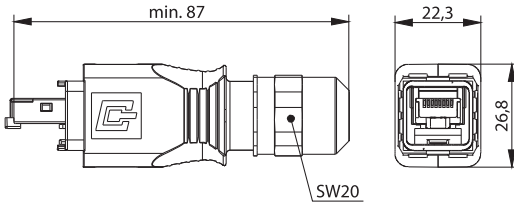

Order no.	Description	Solid/Stranded	Housing	Remarks
J80026A0021	STX V14 RJ45 plug set Cat.6 Class E_A	AWG22-26	metal	field assembly, without bend protection

FO Plug Sets Variant 14 — 3.8.2

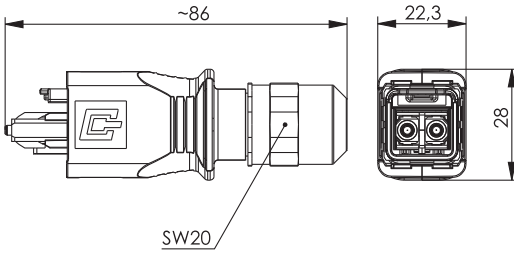

Order no.	Description	Housing	Connector type	Fiber type	Remarks
J88083A0024	STX V14 FO plug set	metal	2SC	Singlemode	without bend protection
J88083A0022	STX V14 FO plug set	metal	2SC	Multimode	without bend protection
J88083A0026	STX V14 FO plug set	metal	2SC	POF	without bend protection

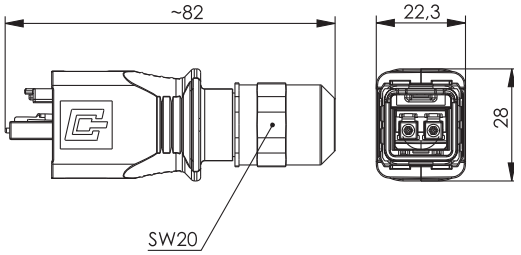

Order no.	Description	Housing	Connector type	Fiber type	Remarks
J88073A0014	STX V14 FO plug set	metal	LC Duplex	Singlemode	without bend protection
J88073A0012	STX V14 FO plug set	metal	LC Duplex	Multimode	without bend protection

3.8 Variant 14

3.8.3 RJ45 Plug Inserts Variant 14

	Plug Insert AWG24-27	Plug Insert AWG22-26
Standards		
Custom-designed cabling systems	-	PROFINET Installation Guideline
Generic cabling systems	ISO/IEC 11801; EN 50173-1; ISO/IEC 24702; IEC 61918	
Connectors	IEC 60603-7-51	IEC 60603-7-5
Degrees of protection provided by enclosures (IP code)	IEC 60529	IEC 60529
Mechanical Characteristics		
Insertion force	≤ 30 N	≤ 30 N
Durability (mating cycles)	≥ 750	≥ 750
Material: connector housing	PC UL94 V0 crystal clear	zinc diecast, nickel plated
Material: contacts	phosphor bronze	tin bronze
Material: contact finish	min. 0.8 µm Au on 2.54 µm Ni	min. 0.8 µm Au on 2.54 µm Ni
Material: contact IDC termination	-	tin bronze
Material: IDC termination finish	-	tin plated
Material: shield	0.5 mm brass	German silver
Material: shield finish	2 µm Ni	-
Cu-Conductor diameter: stranded	0.46 - 0.61 mm AWG 27/7 - AWG 24/7	0.48 - 0.76 mm AWG 26/7 - AWG 22/7
Cu-Conductor diameter: solid	0.36 - 0.51 mm AWG 27/1 - AWG 24/1	0.41 - 0.64 mm AWG 26/1 - AWG 22/1
Core Diameter	0.85 - 1.05 mm	0.85 - 1.6 mm
Cable diameter	5.0 - 7.3 mm	5.5 - 8.5 mm
Environmental Requirements		
Protection against particulate ingress	IP2X	IP2X
Protection against water / immersion	IPX0	IPX0
Ambient temperature	-40° C to + 70° C	-40° C to + 70° C
Rapid change of temperature	-40° C to + 70° C / 25 cycles t=30 min.	-40° C to + 70° C / 25 cycles t=30 min.
Climatic damp heat	+25° C / +65° C / 93% RH // -10° C / 21 cycles	
Flowing mixed gas	+25°C / 73% RH / 4 days, H_2S / SO_2	
Climatic Characteristics		
Temperature range [°C]	-40° C to 70° C	-40° C to 70° C
Electrical Characteristics		
Current carrying capacity at 50°C	1 A	1 A
PoE+ acc to IEEE 802.3at	fulfilled	fulfilled
Transmission Characteristics		
10 Gigabit Ethernet acc. to IEEE 802.3an	fulfilled	fulfilled
Category 6_A (Component)	ISO/IEC 11801, DIN EN 50173-1	-
Class E_A (Channel)	ISO/IEC 11801, DIN EN 50173-1	ISO/IEC 11801, DIN EN 50173-1

3.8.4 FO Plug Inserts Variant 14

	Plug Insert 2SC	Plug Insert LC Duplex
Standards		
Generic cabling systems	ISO/IEC 11801; EN 50173-1; ISO/IEC 24702; IEC 61918	
Custom-designed cabling systems	PROFINET Installation Guideline	-
Connectors	similar to IEC 61754-24	IEC 61754-20
Degrees of protection provided by enclosures (IP code)	IEC 60529	IEC 60529
Mechanical Characteristics		
Insertion force	≤ 30 N	≤ 30 N
Durability (mating cycles)	≥ 500	≥ 500
Material: plug retainer	PA 66	zinc diecast, nickel plated
Material: plug	SC	LC
Material: ferrule	Zirconia	Zirconia
Material: fixing part	-	PBT
Material: crimp sleeve	Copper nickel-plated	Copper nickel plated
Material: cable boot	TPE black	TPE black
Material: protection cap	TPE	PP
Buffered optical fiber diameter	0.9 mm	0.9 mm
Subcable diameter	2.5-3 mm	2.5-3 mm
Overall cable diameter	5.0-8.0 mm	5.0-8.0 mm

	Plug Insert 2SC	Plug Insert LC Duplex
Environmental Requirements		
Protection against particulate ingress	IP2X	IP2X
Protection against water / immersion	IPX0	IPX0
Ambient temperature	-40° C to +65° C	-40° C to + 70° C
Rapid change of temperature	-40° C bis +65° C / 25 cycles t=30 min	-40° C to +85° C / 25 cycles t=30 min
Climatic damp heat	-40°C / +65° C/ rhmax=85% / rhmin=20% / 21 cycles	
Electrical Characteristics		
Insertion loss	Singlemode: max. 0.5 dB; Multimode: max. 0.4 dB	Singlemode: max. 0.5 dB; Multimode: max. 0.4 dB
Return loss	min. 30 dB	min. 30 dB

Protection Cap for Plug Variant 14 — 3.8.5

Performance Characteristics

- plug protective cap for plug housing complying with IEC 61076-3-117 Variant 14
- to protect plug inserts inside of plug housing Variant 14
- protection class IP67 in combination with plug housing
- protection class IP67 in combination with bulkhead protective cap
- rugged PA UL 94V-0
- high resistance to chemicals
- captive, attached protective cap
- grip facility for pulling off
- push-pull locking

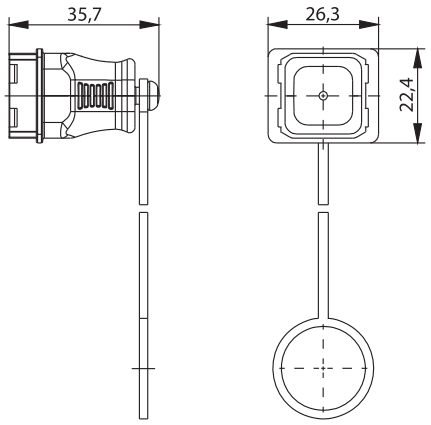

Order no.	Description	Remarks
H80030A0003	STX V14 plug protection cap	plastic

RJ45 Bulkhead Sets Variant 14 — 3.8.6

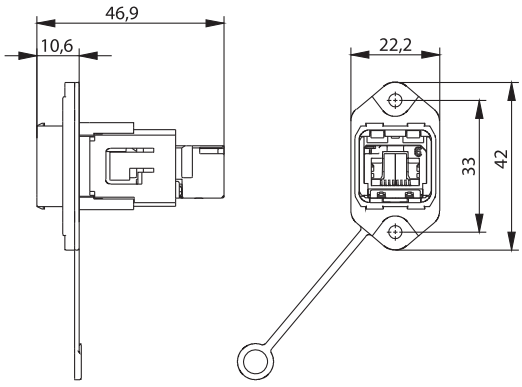

Order no.	Description	Housing	Insert	Remarks	Mount. dim.
J80020A0010	STX V14 standard bulkhead set	metal	RJ45 coupler Cat.6 Class E_A	rectangular mounting cutout	Z132

3.8

3.8 Variant 14

3.8.6 RJ45 Bulkhead Sets Variant 14

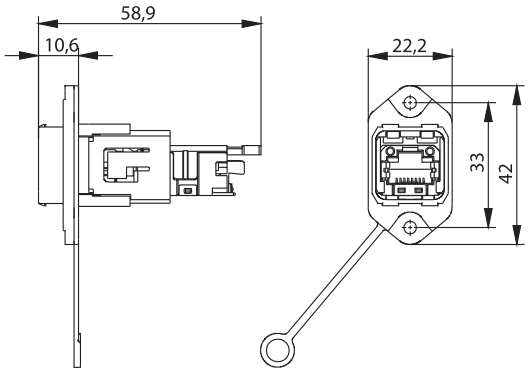

Order no.	Description	Housing	Insert	Remarks	Mount. dim.
J80020A0011	STX V14 standard bulkhead set	metal	RJ45 Modul A Cat.6$_A$	rectangular mounting cutout	Z132

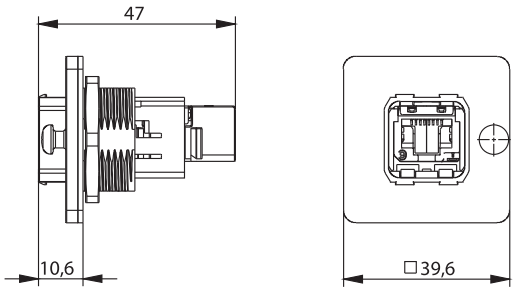

Order no.	Description	Housing	Insert	Remarks	Mount. dim.
J80020A0012	STX V14 central bulkhead set	metal	RJ45 coupler Cat.6 Class E$_A$	round mounting cutout	Z133

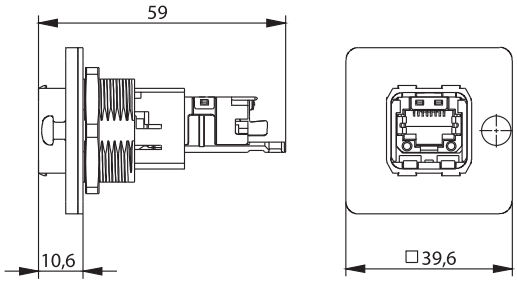

Order no.	Description	Housing	Insert	Remarks	Mount. dim.
J80020A0013	STX V14 central bulkhead set	metal	RJ45 Modul A Cat.6$_A$	round mounting cutout	Z133

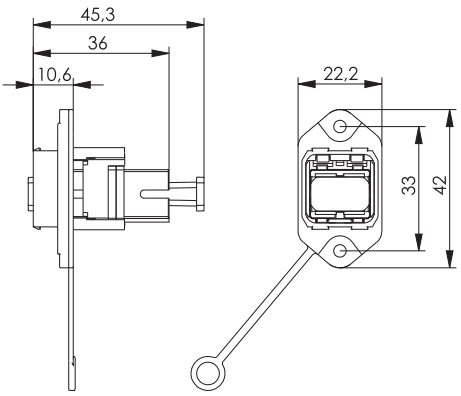

Order no.	Description	Housing	Fiber type	Insert	Remarks	Mount. dim.
J88084A0007	STX V14 standard bulkhead set	metal	Singlemode	SC-RJ adaptor	rectangular mounting cutout	Z132
J88084A0006	STX V14 standard bulkhead set	metal	Multimode	SC-RJ adaptor	rectangular mounting cutout	Z132

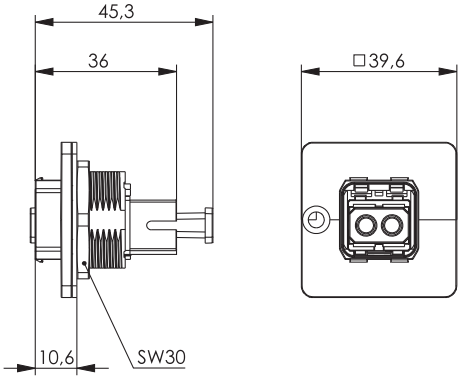

Order no.	Description	Housing	Fiber type	Insert	Remarks	Mount. dim.
J88084A0009	STX V14 central bulkhead set	metal	Singlemode	SC-RJ adaptor	round mounting cutout	Z133
J88084A0008	STX V14 central bulkhead set	metal	Multimode	SC-RJ adaptor	round mounting cutout	Z133

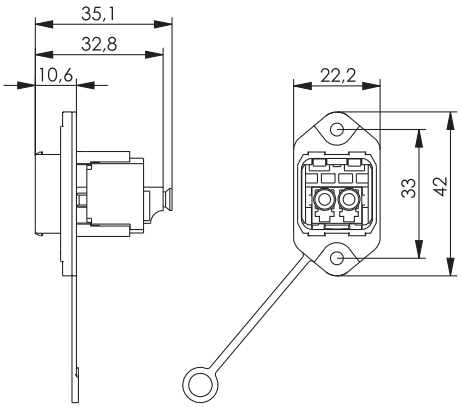

Order no.	Description	Housing	Fiber type	Insert	Remarks	Mount. dim.
J88074A0007	STX V14 standard bulkhead set	metal	Singlemode	LC Duplex adaptor	rectangular mounting cutout	Z132
J88074A0006	STX V14 standard bulkhead set	metal	Multimode	LC Duplex adaptor	rectangular mounting cutout	Z132

3.8 Variant 14

3.8.7 FO Bulkhead Sets Variant 14

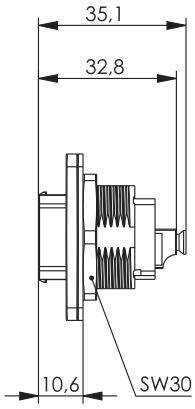

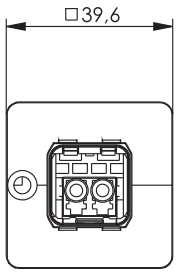

Order no.	Description	Housing	Fiber type	Insert	Remarks	Mount. dim.
J88074A0009	STX V14 central bulkhead set	metal	Singlemode	LC Duplex adaptor	round mounting cutout	Z133
J88074A0008	STX V14 central bulkhead set	metal	Multimode	LC Duplex adaptor	round mounting cutout	Z133

3.8.8 RJ45 Bulkhead Inserts Variant 14

	STX RJ45 Jack	STX RJ45 Coupler
Standards		
Custom-designed cabling systems	ISO/IEC 11801; EN 50173-1; ISO/IEC 24702; IEC 61918	
Generic cabling systems	PROFINET Installation Guideline	PROFINET Installation Guideline
Connectors	IEC 60603-7-51	IEC 60603-7-5
Degrees of protection provided by enclosures (IP code)	IEC 60529	IEC 60529
Mechanical Characteristics		
Insertion force	≤ 30 N	≤ 30 N
Durability (mating cycles)	≥ 750	≥ 750
Material: jack housing	zinc diecast	zinc diecast
Material: housing finish	CuSnZn	nickel plated
Material: contacts	spring steel	spring steel
Material: contact finish	min. 0.8 µm Au on 1.2 µm Ni	min. 0.8 µm Au on 1.2 µm Ni
Material: shield	German silver	German silver
Material: contact IDC termination	CuNi2Si	-
Material: IDC termination finish	min. 3-6 µm Sn	-
Cu-Conductor diameter: stranded	0.46 - 0.76 mm AWG 27/7 - AWG 22/7	-
Cu-Conductor diameter: solid	0.41 - 0.64 mm AWG 26/1 - AWG 22/1	-
Core Diameter	0.9 - 1.6 mm	
Reusable IDC for AWG 22/1; AWG 22/7	≤4 cycles	
Reusable IDC für AWG 23/1 - AWG 26/1; AWG 24/7 - AWG 26/7	≤10 cycles	
Environmental Requirements		
Protection against particulate ingress	IP2X	IP2X
Protection against water / immersion	IPX0	IPX0
Ambient temperature	-40° C to + 70° C	-40° C to + 70° C
Rapid change of temperature	-40° C to + 70° C / 25 cycles t=30 min.	-40° C to + 70° C / 25 cycles t=30 min.
Climatic damp heat	+25° C / +65° C / 93% RH // -10° C / 21 cycles	
Flowing mixed gas	+25°C / 73% RH / 4 days, H_2S / SO_2	
Climatic Characteristics		
Temperature range [°C]	-40° C to 70° C	-40° C to 70° C
Electrical Characteristics		
Current carrying capacity at 50°C	1 A	1 A
PoE+ acc to IEEE 802.3at	fulfilled	fulfilled

	STX RJ45 Jack	STX RJ45 Coupler
Transmission Characteristics		
10 Gigabit Ethernet acc. to IEEE 802.3an	fulfilled	fulfilled
Category 6_A (Component)	ISO/IEC 11801, DIN EN 50173-1	-
Class E_A (Channel)	ISO/IEC 11801, DIN EN 50173-1	ISO/IEC 11801, DIN EN 50173-1

FO Bulkhead Inserts Variant 14 — 3.8.9

	Adaptor SC-RJ/2SC (MM)	Adaptor SC-RJ/2SC (SM)	Adaptor LC Duplex (MM)	Adaptor LC Duplex (SM)
Standards				
Generic cabling systems	ISO/IEC 11801; EN 50173-1; ISO/IEC 24702; IEC 61918			
Custom-designed cabling systems	PROFINET Installation Guideline		-	-
Connectors	similar to IEC 61754-24; similar to EN 50377-6		IEC 61754-20; EN 50377-7	
Fiber optic interconnectiong devices and passive components- Basic test and measurement procedures	IEC 61300-2-x; IEC 61300-3-x	IEC 61300-2-x; IEC 61300-3-x	IEC 61300-2-x; IEC 61300-3-x	IEC 61300-2-x; IEC 61300-3-x
Degrees of protection provided by enclosures (IP code)	IEC 60529	IEC 60529	IEC 60529	IEC 60529
Mechanical Characteristics				
Insertion force	≤ 30 N	≤ 30 N	≤ 30 N	≤ 30 N
Durability (mating cycles)	≥ 500	≥ 500	≥ 500	≥ 500
Material: housing	PBT beige	PBT blue	PEI UL94 V0	PEI UL94 V0
Material: clamps	PBT beige	PBT blue	-	-
Material: frame	-	-	PBT beige	PBT blue
Material: split sleeve	phosphor bronze	zirconia	phosphor bronze	zirconia
Material: protection cap	TPE, black	TPE, black	PP	PP
Environmental Requirements				
Protection against particulate ingress	IP2X	IP2X	IP2X	IP2X
Protection against water / immersion	IPX0	IPX0	IPX0	IPX0
Ambient temperature	-40° C to +65° C			
Rapid change of temperature	-40° C to +65° C / 25 cycles t=30 min			
Climatic damp heat	-40°C / +65° C/ rhmax=85% / rhmin=20% / 21 cycles			
Flowing mixed gas	+25°C / 73% RH / 4 days, H_2S / SO_2			
Optical Characteristics				
Insertion loss	max. 0.4 dB	max. 0.5 dB	max. 0.4 dB	max. 0.5 dB
Return loss	min. 30 dB	min. 40 dB	min. 30 dB	min. 40 dB

Protection Cap for Bulkheads Variant 14 — 3.8.10

Performance Characteristics

- bulkhead protective cap for bulkhead complying with IEC 61076-3-117 Variant 14
- to protect bulkhead inserts inside of bulkhead
- protection class IP67 in combination with bulkhead
- protection class IP67 in combination with plug protective cap
- rugged PA UL 94V-0
- high resistance to chemicals
- captive, attached protective cap
- grip facility for pulling off
- push-pull locking

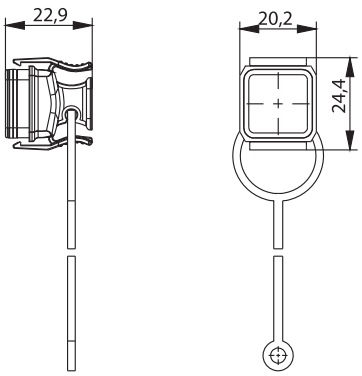

Order no.	Description	Remarks
H80030A0007	STX V14 bulkhead protection cap	plastic

3.9 2SC IP67

	FO Connector 2xSC IP67	FO Flange Coupler 2xSC IP67
Standards		
Connectors	similar to IEC 61754-24	similar to IEC 61754-24
Degrees of protection provided by enclosures (IP code)	IEC 60529	IEC 60529
Mechanical Characteristics		
Material: flange housing	-	ASA
Material: protective cap IP67	-	ASA
Material: adaptor	-	PA
Material: adaptor split sleeve	-	Singlemode: ceramics; Multimode: phosphor bronze
Material: central screw nut	-	PA
Material: gaskets	-	NBR
Insertion force	≤ 30 N	≤ 30 N
Durability (mating cycles)	≥ 750	≥ 750
Material: connector housing	AlMgSi1	-
Material: knurled nut	AlMgSi1	-
Material: O-ring	NBR	NBR
Material: plug retainer	zinc diecast, nickel-plated	-
Material: plug	SC	-
Material: ferrule	zirconia	-
Material: crimp sleeve	Copper nickel-plated	
Material: cable boot	TPE black	-
Material: protection cap	TPE	-
Material: protective cap IP67	POM	-
Material: elastic band	Polyamid	-
buffered optical fiber diameter	0.9 mm	-
Subcable diameter	2.5 - 3 mm	-
Overall cable diameter	5.0 - 8.0 mm	-
Environmental Requirements		
Protection against particulate ingress	IP6X	IP6X
Protection against water / immersion	IPX7	IPX7
Ambient temperature	-40° C to + 70° C	-40° C to + 70° C
Rapid change of temperature	-40° C to + 70° C / 25 cycles t=30 min.	
Climatic damp heat	+25° C / +65° C / 93% RH // -10° C / 21 cycles	
Flowing mixed gas	+25°C / 73% RH / 4 days, H_2S / SO_2	
Electrical Characteristics		
Insertion loss	Singlemode: max. 0.5 db, Multimode: max. 0.4 dB	Singlemode: max. 0.5 dB, Multimode: max. 0.4 dB
Return loss	min. 30 dB	min. 30 dB

3.9.1 FO Connector 2xSC IP67

For Applications with long transmission lines, high EMC exposure or explosive atmospheres FO connectors with protection class IP67 are indispensable. Telegärtner´s FO connector itself consists of bulkhead with a 2SC adaptor and a Duplex plug and is available for GOF and POF fibres. To withstand the rough conditions the robust SC mating face has been integrated into a non-crush metal housing; the spring-loaded protective sleeve ensures optimum protection of the fibre end faces. The connector can be terminated on-site with a standard SC assembly tool set; a crimp sleeve serves as strain relief and the connector is sealed by a cable gland. A screwed, captive cap serves as pulling eye as well as for protection when not connected. The flange mounting outlet is sealed by a protective swivel lid. The connection interface is polarization-proof and the adaptor housing can additionally be mounted in 4x90° positions.

Performance Characteristics

- UV-resistant plastic, fire rating UL94 V0
- polarization-proof connector interface 2xSC with 2.5 mm ferrules and spacing as „SC-RJ“ (acc. to IEC 61754-24)
- robust screw coupling with metal fixing nut
- colour coding: Multimode = beige, Singlemode = blue
- protection class IP67 when not connected, with screwed, captive protective cap with pulling eyelet
- spring-loaded sleeve ensures optimum protection of the fiber face ends
- robust unbreakable design with metal housing
- can be terminated in the field with standard assembly tool set for SC connectors
- strain relief by crimping, sealing by cable gland
- dimensions length without cable boot: 100 mm, ø 27 mm

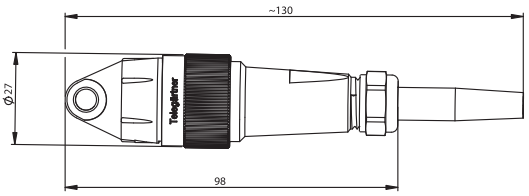

Order no.	Short name	Remarks
J08083A0000	Connector 2xSC IP67 for Multimode	for field assembly
J08083A0001	Connector 2xSC IP67 for Singlemode	for field assembly
J08083H0000	Hybrid connector 2xSC IP67 for Multimode incl. 2 electr. contact pins	for field assembly electrical connection AWG 22-24
J08083H0001	Hybrid connector 2xSC IP67 for Singlemode incl. 2 electr. contact pins	for field assembly electrical connection AWG 22-24

Note: Connector IP67 with Telegärtner-specific design

FO Flange Coupler 2xSC IP67 3.9.2

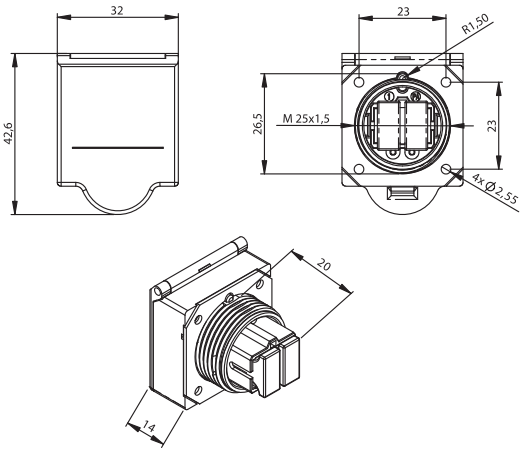

Order no.	Short name	Remarks
J08084A0000	Flange Mounting Oultet 2xSC IP67 for Multimode	
J08084A0001	Flange Mounting Outlet 2xSC IP67 for Singlemode	
J08084H0000	Hybrid Flange Mounting Outlet 2xSC IP67 for Multimode incl. 2 electr. contact sockets	electrical connection AWG 22-24
J08084H0001	Hybrid Flange Mounting Outlet 2xSC IP67 for Singlemode incl. 2 electr. contact sockets	electrical connection AWG 22-24

3.9 2SC IP67

3.9.3 RJ45 and FO Outlet IP66 Surface Mounting

The specification of a Telecommunications Outlet (TO) is based on ISO/IEC 24702, for installation of data outlets in areas subject to extreme ambient stresses due to temperature, dust, moisture or splashing water. The IP66 surface-mount housing from Telegärtner is used to connect devices or complete automation islands; 2 FO or RJ45 outlets can be placed in the unbreakable housing (colour: RAL 7035, protection class IP66), allowing installation direct in manufacturing environments. Its compact size of 110x110x69 mm also permits space-saving installations.

Performance Characteristics

- alternatively 1 or 2 connections with SC Duplex adaptors or RJ45 Modules/Adaptors
- connection of 2x SC-Simplex or 1x SC-RJ connector resp. RJ45 IP67 or RJ45 IP20 plug
- degree of Protection IP66
- M20 cable gland
- little space required for surface mounting, dimensions: 110x110x69 mm

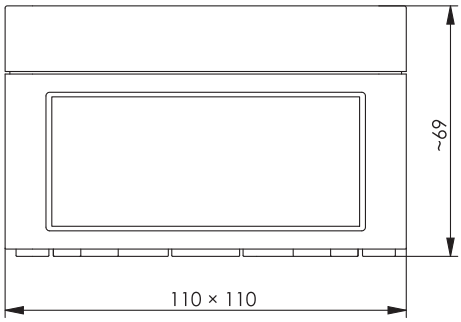

Order no.	Short name	Remarks	Colour
H02050A0097	Surface mounting box IP66	without flange, without piercing	RAL 7035

To simplify enquiry and ordering procedures for IP66 surface-mount outlets, order specifications are available from Telegärtner as print masters or Excel tables. They can be used to produce any desired combination with RJ45 and/or FO inserts. These order specifications can be downloaded under the menu option „Downloads and Tools“ on our homepage www.telegaertner.com.

Order no.	Description	Remarks
H01012A0050	Cable gland M20 for cable dia. 7 - 13.5 mm	Polyamide PA6, grey

Order no.	Short name
U01010A0011	Punch hole and assembly for mounting flange RJ45 IP67 (without flange)

STX Communication Interface IP65

3.10

For the installation of a telecommunications outlet in harsh environments such as on the outside of control cabinets, operation terminals or junction boxes Telegärtner provides a communication interface in protection class IP65. The modular principle - which is used on all connectors with ***STEADY****TEC*®-Technology - allows us to offer a wide range of products.

Benefit from maximum flexibility and choose the insert you need! The RJ45 inserts stand out due to high power reserves and offer transmission characteristics up to 10Gbit Ethernet. The FO plug and bulkhead inserts are available for GOF and POF-fibres and provide the most suitable solution for every application. In addition USB inserts are available.

Performance Characteristics

- communication interface in protection class IP65
- available with RJ45 Cat.6_A, Cat.6 Class E_A, USB or FO insert
- rugged PA-housing UL94V0
- captive protective cap attached to the seal
- round cutout according to mounting dimension Z122 for central screw mounting
- for material thickness 1-5 mm

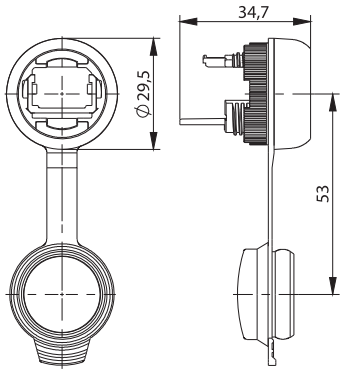

Order no.	Description	Housing	Mount. dim.
H86011A0007	STX communication interface IP65	plastic	Z122

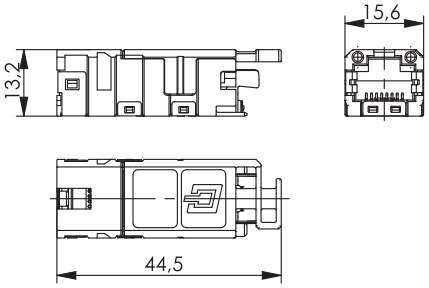

Order no.	Description	Colour coding
J80029A0000	STX RJ45 jack A Cat.6_A	TIA 568 A
J80029A0001	STX RJ45 jack B Cat.6_A	TIA 568 B
J80029A0002	STX RJ45 jack P Cat.6_A	PROFINET

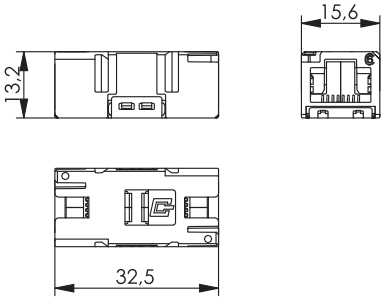

Order no.	Description	Remarks
J80029A0010	STX RJ45 coupler Cat.6 Class E_A	suitable for Class E_A Channel

3.10 STX Communication Interface IP65

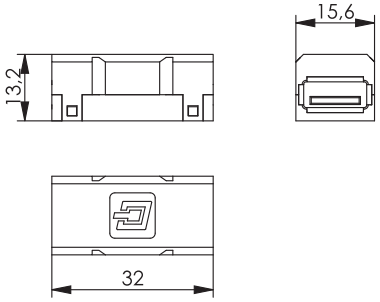

Order no.	Description
J80029A0004	STX USB coupler 2.0 type A, f-f
J80029A0011	STX USB coupler 2.0 type A-B, f-f
J80029A0012	STX USB coupler 3.0 type A, f-f

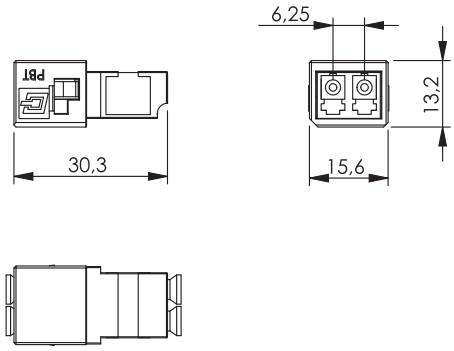

Order no.	Description	Connector type	Fiber type
F80074A0000	STX FO adaptor	LC Duplex	Multimode
F80074A0001	STX FO adaptor	LC Duplex	Singlemode

FO Wall Boxes and Splice Boxes 3.11

Fiber optic wall boxes and splice boxes by Telegärtner offer a maximum amount of ports using a minimum of space. Based on Telegärtner's decades of experience, they offer easy and reliable patching even in high density applications.

	FO Wall Distributor	FO Wall Splice Box	FO Combi Wall Box	FO Mini Wall Distributor
Mechanical Characteristics				
Housing	sheet steel 1 mm, powder-laminated, light grey RAL 7035			
Distribution plates	aluminium sheet 1,5 mm, powder-laminated, light grey RAL 7035			
Cable entries / strain relief	M25x1,5 for 6-20 mm cable diameter in 4 steps		strain relief bar for cable ties	
Protection class acc. to IEC 60529	IP 30	IP 20	IP20	IP 30
Panel piercings	for ST, SC, SC Duplex, FC, E2000, DIN, LC Duplex	-	for ST, SC, SC Duplex, E2000, LC Duplex	
Dimension: width	440 mm	440 mm	440 mm	320 mm
Dimension: hight	440 mm	440 mm	440 mm	280 mm
Dimension: depth	95 mm	95 mm	85 mm	50 mm

	FO Compact Splice Box	FO Splice Box IP66 S-V	FO Splice Box IP66 M-V	Wall Distributor ODB 54
Mechanical Characteristics				
Housing	sheet steel 1 mm, powder-laminated, light grey RAL 7035	thermoplastic, non halogen, flame retardant, light grey RAL 7035		
Distribution plates	aluminium sheet 1,5 mm, powder-laminated, light grey RAL 7035			aluminium sheet 1,5 mm, anodized
Cable entries / strain relief	strain relief bar for cable ties	M12; M16; M20; M25; for Ø 4-15.5 mm	M12; M16; M20; M25; for Ø 4-15.5 mm	2x M20 cable grand for cables Ø 5 - 9 mm
Protection class acc. to IEC 60529	IP 30	IP 66	IP 66	IP 54
Panel piercings	for ST, SC, SC Duplex, E2000, LC Duplex			for ST, SC, LC, E2000
Dimension: width	265 mm	254 mm	360 mm	250 mm
Dimension: hight	150 mm	180 mm	254 mm	200 mm
Dimension: depth	55 mm	90 mm	111 mm	64 mm

FO Wall Distributor 3.11.1

Performance Characteristics

- up to 4 incoming fiber optic cables
- up to 8 splice cassettes
- separately lockable doors
- distribution plates for different types of FO adaptors

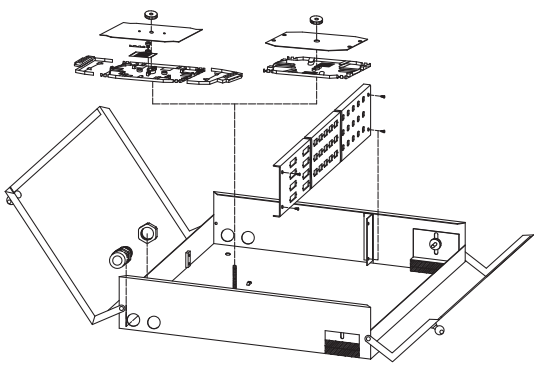

Order no.	Description	Remarks	Dimensions
H02050A0004	FO Wall Distributor	Housing with two separately lockable swivel doors, with 4 cable entry holes for M25 glands, 2 each on top and bottom, for storage of 8 splice cassettes maximum, additional strain relief clamps and guiding clips for fibers and cables	440 x 440 x 95 mm

3.11 FO Wall Boxes and Splice Boxes

3.11.2 FO Wall Splice Box

Performance Characteristics

- up to 4 incoming fiber optic cables
- up to 16 splice cassettes
- distribution plates for different types of FO adaptors
- strain relief bar for outgoing fiber optic cables

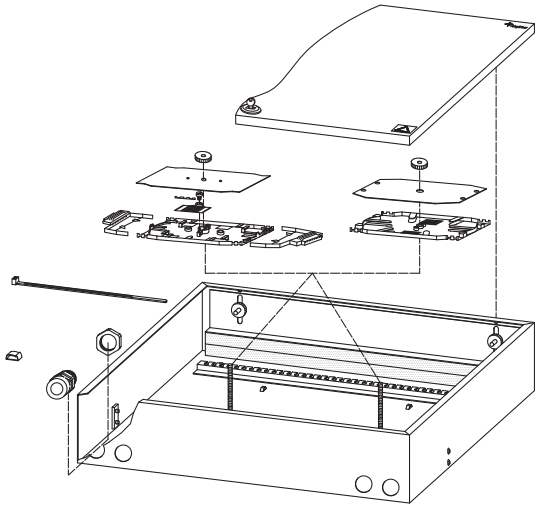

Order no.	Description	Remarks	Dimensions
H02050A0006	FO Wall Splice Box	Housing with lockable cover, with 4 cable entry holes for M25 glands, strain relief bar for fixing by cable ties inside the housing and sealing foam strap, for storage of 16 splice cassettes maximum, additional strain relief clamps and guiding for fibers and cables	440 x 440 x 95 mm

3.11.3 FO Combi Wall Box

Performance Characteristics

- cable entry sealed by foam strips
- strain relief bar with cable ties
- up to 24 splice cassettes
- distribution plates for different types of FO adaptors

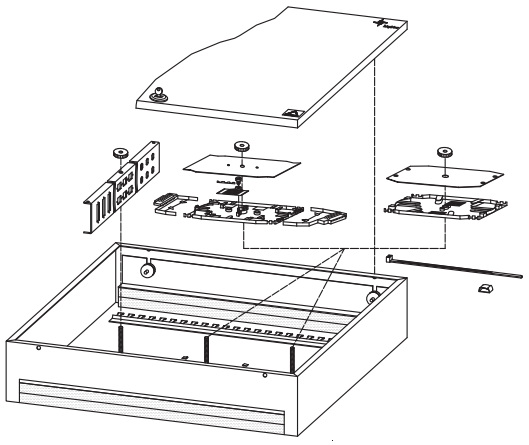

Order no.	Description	Remarks	Dimensions
H02050A0010	FO Combi Wall Box	Housing with swivel lid, lockable, with strain relief bars inside the housing and sealing foam straps for incoming and outgoing cables, or storage of 24 splice cassettes maximum, or 4 cassettes and 2 distribution plates.	440 x 440 x 85 mm

FO Mini Wall Distributor 3.11.4

Performance Characteristics

- distribution plates for different types of FO adaptors
- up to 4 splice cassettes and distribution plates
- alternatively 8 splice cassettes without distribution plates

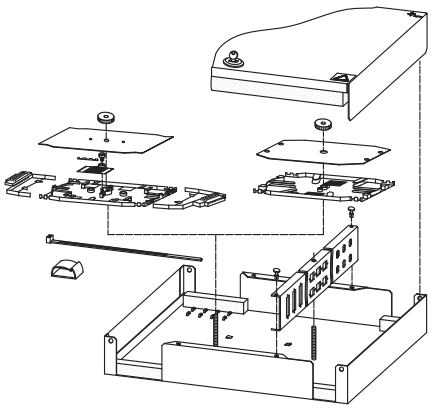

Order no.	Description	Remarks	Dimensions
H02050A0008	FO Mini Wall Distributor	Housing with lockable cover, with each 2 cable entry openings for incoming and outgoing cables to be fixed by cable ties, with sealing straps, for storage of 8 splice cassettes maximum, or 4 cassettes and 1 distribution plate.	320 x 280 x 50 mm

FO Compact Splice Box 3.11.5

Performance Characteristics

- one splice cassette and distribution plate
- alternatively 4 splice cassettes without distribution plates
- with lockable cover

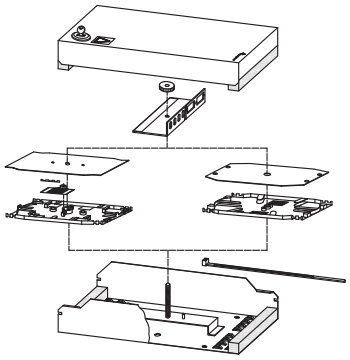

Order no.	Description	Remarks	Dimensions
H02050A0013	FO Compact Splice Box	Housing with lockable cover, with 2 cable entry openings for incoming and outgoing cables to be fixed by cable ties, with sealing straps, for storage of 4 splice cassettes maximum or 1 cassette and 1 distribution plate.	265 x 150 x 55 mm

3.11 FO Wall Boxes and Splice Boxes

3.11.6 FO Splice Box IP66

Performance Characteristics

- water- and dust-proof housing
- protection class IP66
- available in 2 different sizes

Order no.	Description	Remarks	Dimensions
H02050A0229	FO splice box IP66 S-V	housing with embossed holes M20/M25, for storage of up to 5 splice cassettes Telekom or 3 splice cassettes Telekom and 1 distribution plate	254 x 180 x 90 mm; wall mounting: 239 x 165 mm; 4xØ4.5
H02050A0231	FO splice box IP66 M-V	housing with embossed holes M20/M25, for storage of up to 8 splice cassettes Telekom or 3 splice cassettes Telekom and 1 distribution plate	360 x 254 x 111 mm; wall mounting: 346 x 239 mm; 4xØ4.5

3.11.7 Accessories for FO Splice Box IP66

Order no.	Description	Remarks
H01011A0037	Cable gland M20 for cable dia. 5 - 9 mm	Polyamide PA6, grey
H01012A0044	Cable gland M20 for cable diameter 9 - 13 mm	Polyamide PA6, grey
H01012A0048	Cable gland M25 for cable diameter 16-20 mm	Polyamide PA6, grey

Order no.	Description	Remarks
H01011A0043	split cable gland, M25x1,5, with split nut hex 32	Polyamide PA6, grey

Order no.	Description	Remarks
B01012A0033	cable insert for split cable gland M25, 2x Ø 2 mm	polymere
B01012A0034	cable insert for split cable gland M25, 2x Ø 3 mm	polymere
B01012A0035	cable insert for split cable gland M25, 4x Ø 2 mm	polymere
B01012A0036	cable insert for split cable gland M25, 4x Ø 3 mm	polymere
B01012A0037	cable insert for split cable gland M25, Ø 5-6 mm	polymere
B01012A0038	cable insert for split cable gland M25, Ø 6-7 mm	polymere
B01012A0039	cable insert for split cable gland M25, Ø 7-8 mm	polymere
B01012A0040	cable insert for split cable gland M25, Ø 8-9 mm	polymere
B01012A0041	cable insert for split cable gland M25, Ø 9-10 mm	polymere
B01012A0042	cable insert for split cable gland M25, Ø 10-11 mm	polymere

Order no.	Short name
U01010A0004	Drilling hole and fixing cable gland M20x1,5 (without products)

Performance Characteristics

- protection class IP54
- material: PC, IK 04
- locking with 2 snap-fits and optional lead seal

Customized versions on request.

- loop storage
- mounting of gas- or waterblocker for blow fiber system (optional)

IP54

Order no.	Dimensions	Description	Remarks
H02050A0190	250 x 200 x 64 mm	ODB 54 housing	for splicing of max. 24 fibers

Order no.	Dimensions	Number of Adaptors	Adaptor Type	Colour	Fiber Pigtails
H02050A0193	250 x 200 x 64 mm	6	SC duplex adaptor, singlemode	blue	12x 9/125 OS2
H02050A0194	250 x 200 x 64 mm	6	SC /APC duplex adaptor, singlemode	green	12x 9/125 OS2
H02050A0191	250 x 200 x 64 mm	6	SC duplex adaptor, multimode	beige	12x 50/125 OM2
H02050A0192	250 x 200 x 64 mm	6	SC duplex adaptor, multimode	aqua	12x 50/125 OM3
H02050A0246	250 x 200 x 64 mm	6	SC duplex adaptor, multimode	black	12x 50/125 OM4

Order no.	Dimensions	Number of Adaptors	Adaptor Type	Colour	Fiber Pigtails
H02050A0201	250 x 200 x 64 mm	6	ST duplex adaptor, singlemode	metal	12x 9/125 OS2
H02050A0199	250 x 200 x 64 mm	6	ST duplex adaptor, multimode	metal	12x 50/125 OM2
H02050A0200	250 x 200 x 64 mm	6	ST duplex adaptor, multimode	metal	12x 50/125 OM3
H02050A0248	250 x 200 x 64 mm	6	ST duplex adaptor, multimode	metal	12x 50/125 OM4

Order no.	Dimensions	Number of Adaptors	Adaptor Type	Colour	Fiber Pigtails
H02050A0197	250 x 200 x 64 mm	6	LC duplex adaptor, singlemode	blue	12x 9/125 OS2
H02050A0198	250 x 200 x 64 mm	6	LC/APC duplex adaptor, Singlemode	green	12x 9/125 OS2
H02050A0195	250 x 200 x 64 mm	6	LC duplex adaptor, multimode	beige	12x 50/125 OM2
H02050A0196	250 x 200 x 64 mm	6	LC duplex adaptor, multimode	aqua	12x 50/125 OM3
H02050A0247	250 x 200 x 64 mm	6	LC duplex adaptor, multimode	black	12x 50/125 OM4

Order no.	Dimensions	Number of Adaptors	Adaptor Type	Colour	Fiber Pigtails
H02050A0205	250 x 200 x 64 mm	12	E2000 APC adaptor, singlemode	green	12x 9/125 OS2

3.11 FO Wall Boxes and Splice Boxes

3.11.9 ODB 54 - TICNET

Performance Characteristics

- protection class IP54
- material: PC, IK 04
- locking with 2 snap-fits and optional lead seal
- mounting for TICNET cable splitter ODS-Mini 4-24 fibers

IP54

Order no.	Description	Remarks
H02050A0279	Housing ODB54 - TICNET	for max. 6 SC Duplex / LC Quad / ST Duplex adaptors
H02050A0280	Housing ODB54 - TICNET	for max. 6 LC Duplex adaptors
H02050A0281	Housing ODB54 - TICNET	for max. 12 E2000 adaptors

3.11.10 SAM - Splice Arranged Management ODB 54

Order no.	Description	Remarks
H02050A0282	ODB 54 equipped with 8 SC cassettes	for max. 4 fibers for crimp/shrink splice protection each cassette
H02050A0283	ODB 54 equipped with 4 SE cassettes	for max. 12 fibers for crimp/shrink splice protection each cassette

3.11.11 Accessories for ODB 54

Order no.	Description	Remarks
F08000A0002	Splice holder for 12 crimp splice protectors	System Telekom

Order no.	Description	Remarks
F08000A0008	Splice holder for 6 shrink splices	for shrink splice protector Ø 3 mm

Order no.	Description	Remarks
H01011A0037	Cable gland M20 for cable dia. 5 - 9 mm	Polyamide PA6, grey
H01012A0050	cable gland M20 for cable dia. 7 - 13.5 mm	Polyamide PA6, grey

Order no.	Description
H01000A0288	ODB 54 add-on-kit cellular rubber patch cable entry

Order no.	Description
R00040A0047	ODB 54 add-on-kit cable tie for gas/water blocker

3.11 FO Wall Boxes and Splice Boxes

3.11.12 Distribution Plates for FO Wall Distributors and FO Splice Boxes

Order no.	for Housing type	Number of panel piercings and connector type	Panel piercing	Number of rows x panel piercings	Port marking
H02025A0069	Wall Distributor	48 ST	Z64	3x16	x
H02025A0070	Wall Distributor	48 SC	Z77	3x16	x
H02025A0097	Wall Distributor	24 SC Duplex, LC Quad	Z93	4x6	x
H02025A0533	Wall Distributor	48 SC Duplex, LC Quad	Z93	2x24S	x
H02025A0278	Wall Distributor	48 E2000	Z66	3x16	x
H02025A0155	Wall Distributor	72 LC Duplex	Z99	3x24	x

Order no.	for Housing type	Number of panel piercings and connector type	Panel piercing	Number of rows x panel piercings	Port marking
H02025A0112	Combi-Wall Box / Mini Wall Distributor	24 ST	Z64	2x12	x
H02025A0113	Combi-Wall Box / Mini Wall Distributor	24 SC	Z77	2x12	x
H02025A0114	Combi-Wall Box / Mini Wall Distributor	12 SC Duplex, LC Quad	Z93	1x12	x
H02025A0281	Combi-Wall Box / Mini Wall Distributor	24 E2000	Z66	2x12	x
H02025A0349	Combi-Wall Box / Mini Wall Distributor	24 LC Duplex	Z99	2x12	x
H02025A0366	Combi-Wall Box / Mini Wall Distributor	24 SC Duplex, LC Quad	Z93	4x6	x

Order no.	for Housing type	Number of panel piercings and connector type	Panel piercing	Number of rows x panel piercings
H02025A0293	Compact Splice Box	12 ST	Z64	2x6
H02025A0286	Compact Splice Box	6 SC	Z77	1x6
H02025A0137	Compact Splice Box	4 SC Duplex, LC Quad	Z93	1x4
H02025A0350	Compact Splice Box	6 E2000	Z66	1x6
H02025A0115	Compact Splice Box	6 LC Duplex	Z99	1x6

Order no.	for Housing type	Number of panel piercings and connector type	Panel piercing	Number of rows x panel piercings
H02025A0331	Splice Box IP66 S-V	12 ST	Z64	2x6
H02025A0329	Splice Box IP66 S-V	12 SC adaptor	Z77	2x6
H02025A0328	Splice Box IP66 S-V	12 SC Duplex, 12 LC Quad	Z93	1x12
H02025A0330	Splice Box IP66 S-V	12 LC Duplex	Z99	2x6
H02025A0368	Splice Box IP66 S-V	12 E2000	Z66	2x6
H02025A0322	Splice box IP66 M-V	24 ST	Z64	2x12
H02025A0332	Splice box IP66 M-V	24 SC	Z77	2x12
H02025A0336	Splice box IP66 M-V	18 SC Duplex, LC Quad	Z93	3x6
H02025A0333	Splice box IP66 M-V	24 E2000	Z66	2x12
H02025A0334	Splice box IP66 M-V	24 LC Duplex	Z99	2x12

4

Components for Outdoor Cabling - RJ45/FO

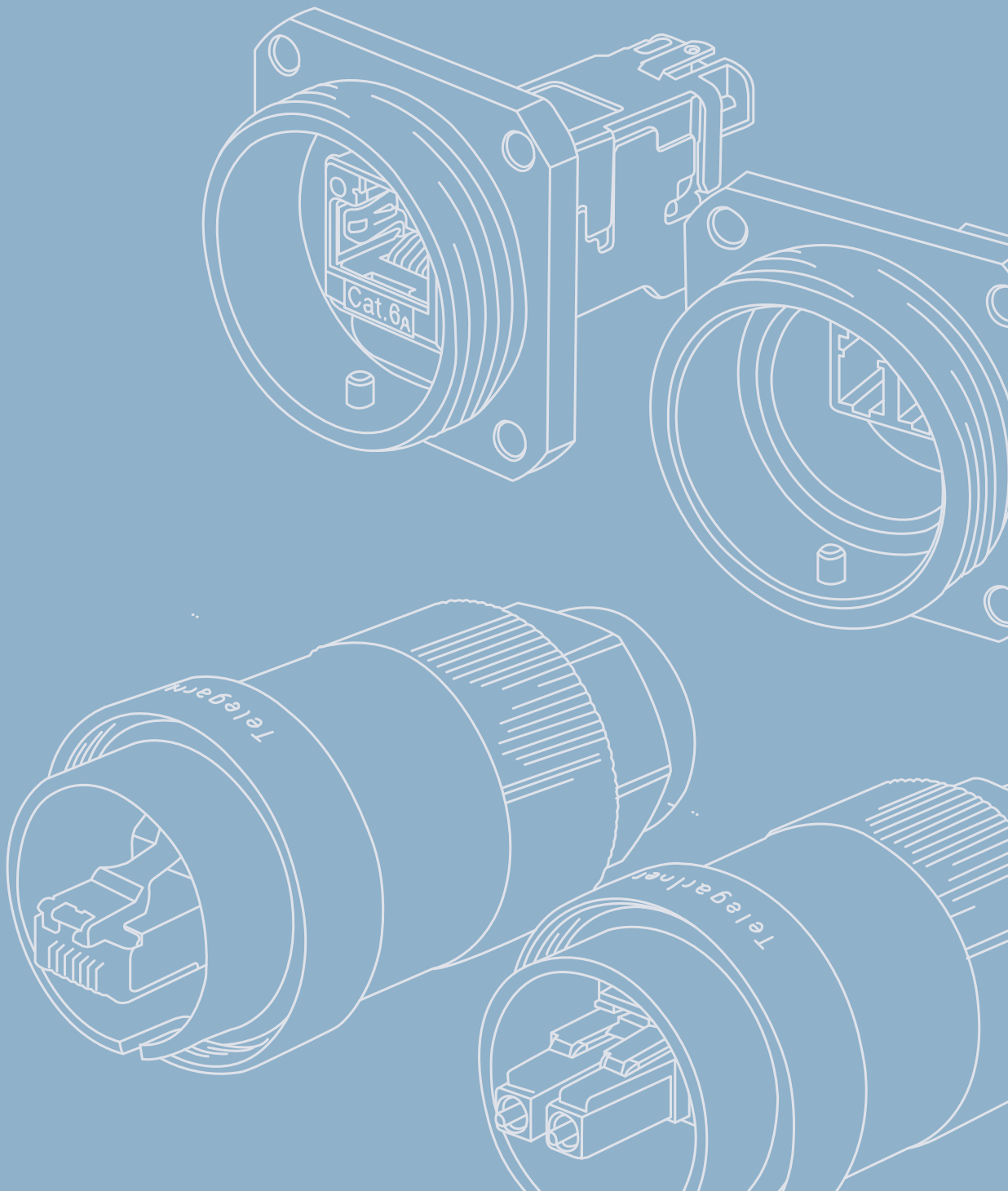

4 TOC – Outdoor Connectors

4.1 TOC Series RJ45 155

4.1.1 TOC Plug Set IP68 MFP8 T568B Cat.6_A 156
4.1.2 TOC Bulkhead Set IP68 157
4.1.3 TOC Coupler IP68 AMJ Coupler K 158
4.1.4 TOC Bulkhead Outlet IP68 158

4.2 TOC Series LC Duplex 159

4.2.1 TOC Plug Set IP68 LC Dupleax 160
4.2.2 TOC Bulkhead Set IP68 LC Duplex 160
4.2.3 TOC Coupler IP68 LC Duplex 161

4.3 TOC Series MPO/MTP® 161

4.3.1 TOC Plug Set IP68 MPO/MTP® 162
4.3.2 TOC Bulkhead Set IP68 MPO/MTP® 162
4.3.3 TOC Coupler IP68 MPO/MTP® 163

4.4 Accessories for TOC Series 163

TOC stands for Telecommunications Outdoor Connectors and offers cabling professionals the reliability and flexibility they need for toughest applications. The handy, easy to install, TOC connectors are used for data- and telecommunications in mobile radio, process-, utility- and traffic automation, or security applications but also in the harsh environment of machine and plant engineering. The TOC series is available in nickel-plated brass for RJ45 Cat.6_A, FO LC Duplex and MPO/MTP® connectors. Compliance with the specifications of protection class IP68 and due to its excellent material properties, the TOC series can be installed even in harsh conditions within a temperature range from -40°C to 85°C. To lock, relief of strain and seal the connection, one turning movement is necessary and no further procedures are required. Customers benefit: a fast, error free and easy installation, high transmission reliability and resilience and more flexibility in the network design.

TOC Series RJ45 4.1

The TOC series RJ45 coming with the newly available field assembly RJ45 plug MFP8 Cat.6_A and RJ45 keystone AMJ-S Module Cat.6_A is available as a set. They can be attached to solid and stranded conductor cables with cable outer diameter max. 9.5 mm on site without the need for any special tools. For line extensions, the TOC Coupler IP68 is your first choice. It can be easily integrated with no negative effects on performance of the connection.

Performance Characteristics

- suitable for 10 Gigabit Ethernet acc. to IEEE 802.3an
- suitable for PoE+ acc. to IEEE 802.3at
- 360° shielding
- temperature range: -40° to +85°C
- protection class IP68 acc. to IEC 60529
- protection cap with protection class IP68

	TOC plug set MFP8	TOC bulkhead set AMJ-S Module	TOC bulkhead set AMJ Coupler	TOC Coupler AMJ Coupler
Standards				
Connectors	IEC 60603-7-51	IEC 60603-7-51	IEC 60603-7-51	IEC 60603-7-51
Generic cabling systems	ANSI/TIA/EIA-568-C.2; ISO/IEC 11801; DIN EN 50173-1			
Degrees of protection provided by enclosures (IP code)	IEC 60529	IEC 60529	IEC 60529	IEC 60529
Mechanical Characteristics				
Insertion force	≤ 30 N	≤ 30 N	≤ 30 N	≤ 30 N
Durability (mating cycles)	≥ 100	≥ 100	≥ 100	≥ 100
Material: screw	-	-	-	Stainless steel
Material: snap-fit	-	spring steel stainless	-	-
Material: snap arm for cable trap	-	PC UL94 V0 black	-	-
Material: slide for shield contact	-	PC UL94 V0 black	-	-
Material: shield	-	German silver	German silver	German silver
Material: insulating plate	-	PC UL94 V0 white	-	-
Material: insulation body	-	PC UL94 V0 white	PA UL94 V2 pure white	PA UL94 V2 pure white
Material: PCB finish	-	chem. tin-plated	chem. tin plated	chem. tin plated
Material: contact IDC termination	-	CuNi2Si	-	-
Material: IDC termination finish		min. 3-6 µm Sn	min. 3-6 µm Sn	min. 3-6 µm Sn
Material: adaptor housing	-	-	zinc diecast	zinc diecast
Material: housing	brass, 5 µm Ni plated			
Material: contact housing	PC UL94 V0 crystal clear	-	-	-
Material: RJ45 insert	zinc diecast, nickel plated	zinc diecast, nickel plated	-	-
Material: Coupling nut	brass, 5 µm Ni plated	-	-	-
Material: O-ring	silicone red	silicone red	silicone red	silicone red
Material: sealing insert	silicone transparent	-	-	-

4.1 TOC-Serie RJ45

	TOC plug set MFP8	TOC bulkhead set AMJ-S Module	TOC bulkhead set AMJ Coupler	TOC Coupler AMJ Coupler
Mechanical Characteristics				
Material: wire pair presorting	PC UL94 V0 white	PBT UL94 V0 nature	-	-
Material: hook	PBT UL94 V0 black	-	-	-
Material: cable clamp	PBT UL94 V0 black	-	-	-
Material: protection cap	PBT UL94 V0 black	-	-	-
Material: PCB	FR4 UL94 V0	FR4 UL94 V0	FR4 UL94 V0	FR4 UL94 V0
Material: piercing contacts	Sn plated, min. 3-6 µm	-	-	-
Material: shield contact	brass; 2.5 µm Ni plated	-	-	-
Material: contacts	spring steel	spring steel	spring steel	spring steel
Material: contact finish	min. 0.8 µm Au on 1.2 µm Ni			
Material: protection cap IP68	brass, 5 µm Ni plated			
Cu-Conductor diameter: solid	0.51 - 0.64 mm AWG 24/1 - AWG 22/1	0.41 - 0.64 mm AWG 26/1 - AWG 22/1	-	-
Cu-Conductor diameter: stranded	0.46 - 0.76 mm AWG 27/7 - AWG 22/7	0.46 - 0.76 mm AWG 27/7 - AWG 22/7	-	-
Insulation diameter	1.0 - 1.6 mm	1.0 - 1.6 mm	-	-
Cable diameter	4.0 - 9.5 mm	4.0 - 9.5 mm	-	-
Environmental Requirements				
Ambient temperature	-40°C to +85°C	-40°C to +85°C	-40°C to +85°C	-40°C to +85°C
Electrical Characteristics				
Current carrying capacity at 50°C	1 A	1 A	1 A	1 A
PoE+ acc to IEEE 802.3at	Adequate for Power over Ethernet+			
Transmission Characteristics				
Class E_A (Channel)	-	-	ISO/IEC 11801, DIN EN 50173-1	
Category 6	-	-	ISO/IEC 11801, DIN EN 50173-1	
10 Gigabit Ethernet acc. to IEEE 802.3an	Adequate for 10 Gigabit Ethernet			
Category 6_A	ISO/IEC 11801, DIN EN 50173-1			
Class E_A	ISO/IEC 11801, DIN EN 50173-1			
Category 6A	ANSI/TIA/EIA-568-C.2			

4.1.1 TOC plug set IP68 MFP8 T568B Cat.6_A

Performance Characteristics

- RJ45 plug MFP8 Cat.6_A acc. to IEC 60603-7-51 (500 MHz)
- RJ45 plug MFP8 Cat.6_A UL listed (E244889)
- Cu-conductor:
  solid 0.41 - 0.64 mm (AWG24/1 – AWG22/1);
  stranded 0.46 - 0.76 mm (AWG27/7 – AWG22/7)
- insulation diameter: 1.0 - 1.6 mm
- cable outer diameter: 4 - 9.5 mm
- RJ45 plug MFP8 Cat.6_A UL listed (E244889)

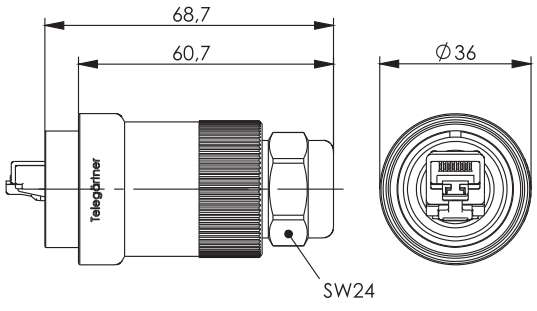

Order no.	Short name	Description	Remarks
J60026A0000	TOC plug set IP68	MFP8 T568B Cat.6_A; AWG22-27	brass, nickel plated

Performance Characteristics

- RJ45 AMJ-S Module Cat.6_A or AMJ Coupler K Cat.6 Class E_A acc. to IEC 60603-7-51
- Cu-conductor:
  solid 0.4 - 0.64 mm (AWG26/1 – AWG22/1);
  stranded 0.46 - 0.76 mm (AWG27/7 – AWG22/7)
- USB-Keystone 3.0 (f-f) Type A
- insulation diameter: 0.9 - 1.6 mm
- 4-hole mounting, mounting cut out Ø 30.5 mm
- AMJ-S Module: UL listed (E244889)

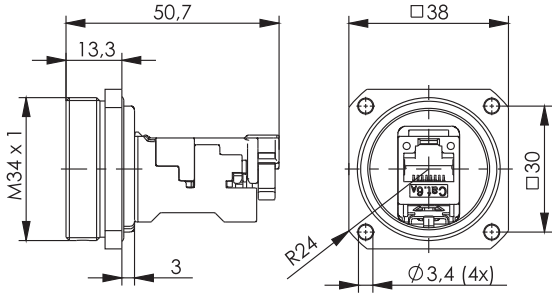

Cat.6_A

REAL-TIME RE-EMBEDDED

Order no.	Short name	Description	Remarks
J60020A0000	TOC Bulkhead Set IP68	AMJ-S Module Cat.6_A T568B	brass, nickel plated

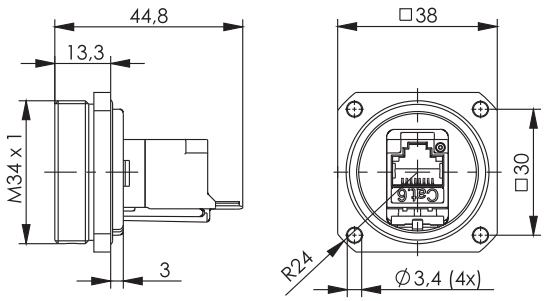

Order no.	Short name	Description	Remarks
J60020A0002	TOC Bulkhead Set IP68	AMJ Coupler K Cat.6 Class E_A	brass, nickel plated

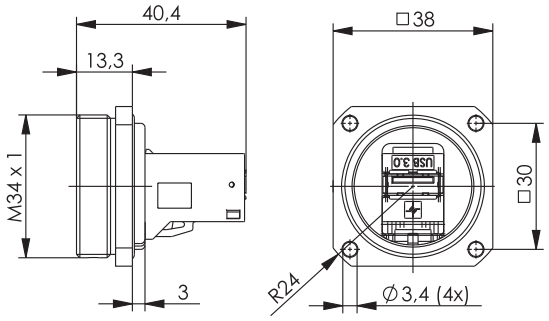

Order no.	Short name	Description	Remarks
J60020A0004	TOC Bulkhead Set IP68	USB-Keystone 3.0 (f-f) Type A	brass, nickel plated

4.1 TOC-Serie RJ45

4.1.3 TOC coupler IP68 AMJ Coupler K

Performance Characteristics

- RJ45 AMJ Coupler K acc. to IEC 60603-7-51 (500 MHz)
- RJ45 jack to RJ45 jack
- suitable for TOC plug set RJ45 IP68
- mounting on DIN rail TH35 by means of adaptor (J06000A0056)

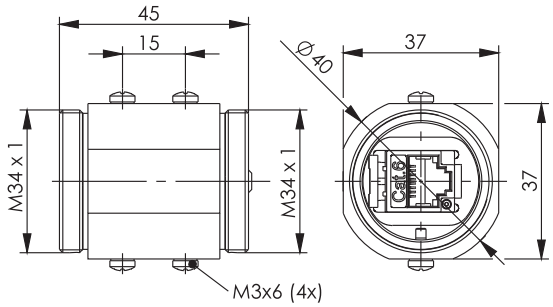

Order no.	Short name	Description	Remarks
J60029A0000	TOC Coupler IP68	AMJ Coupler K Cat.6 Class E_A	brass, nickel plated

4.1.4 TOC Bulkhead Outlet IP68

Performance Characteristics

- RJ45 jack to RJ45 jack
- Cu-conductor:
  solid 0.41 - 0.64 mm (AWG24/1 – AWG22/1);
  stranded 0.46 - 0.76 mm (AWG27/7 – AWG22/7)
- insulation diameter: 0.9 - 1.6 mm
- optional with bracket for top hat rail and surface mounting (H06000A0074)
- RJ45 AMJ-S Module Cat.6_A UL listed (E244889)

Cat.6_A

REAL-TIME RE-EMBEDDED

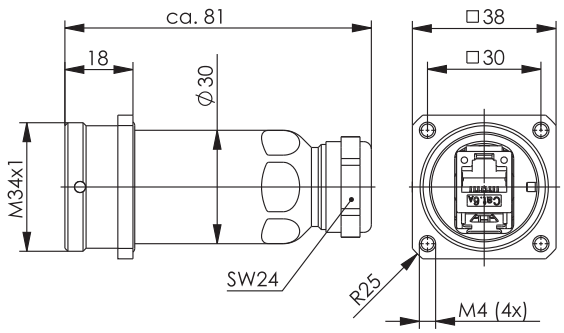

Order no.	Short name	Description	Remarks
J60023A0000	TOC Bulkhead Outlet IP68	AMJ-S Module Cat.6_A T568B	brass, nickel plated

Order no.	Short name	Remarks
H06000A0074	TOC bracket	gauge 38 mm and TH35

TOC Series LC Duplex 4.2

The TOC series with LC Duplex plugs captivates due to its flexibility and ease of installation. Customers can choose whether they work with pre-terminated cables feed into TOC plug housing from the backside or they terminate the LC plugs themselves on site. The enclosed LC holding frame with elongated release latch accepts the LC plugs firmly and offers an additional tool free strain relief. By means of the elongated release latch the LC plugs can be mated & unmated into SFP+ transceivers or LC Duplex adaptors effortlessly even in confined installation environments. In addition, the several installation positions of SFP+ transceivers no longer form a problem as the holding frame incorporating the LC plugs easily adjusts to them. For line extensions, the TOC Coupler IP68 LC Duplex is your first choice. It can be easily integrated with no negative effects on performance of the connection.

Performance Characteristics

- plug & adaptor acc. to IEC 61754-20 (circonia ceramics)
- Singlemode/Multimode (PC) & Singlemode (APC) types
- temperature range: -40° to +85°C
- Insertion Loss: plug Multimode max. 0.4 dB, Singlemode max. 0.5 dB
- Return Loss: plug: Multimode min. 30 dB, Singlemode PC min. 40 dB, APC min. 60 dB
- protection class IP68 acc. to IEC 60529
- protection cap with protection class IP68

	TOC LC plug set	TOC LC bulkhead set	TOC LC coupler
Standards			
Generic cabling systems	ISO/IEC 11801, EN 50173-1		
Connectors	IEC 61754-20; EN 50377-7		
Degrees of protection provided by enclosures (IP code)	IEC 60529		
Fiber optic interconnectiong devices and passive components- Basic test and measurement procedures	IEC61300-2-x; IEC61300-3-x		
Mechanical Characteristics			
Material: screw	-	-	Stainless steel
Material: adaptor housing	-	-	Plastic (PEI UL94 V-0) blue
Material: flange housing	-	brass, 5 µm Ni plated	-
Material: adaptor housing	-	plastic (PEI UL94 V-0)	brass, 5 µm Ni plated
Material: split sleeve	-	Zirkonia ceramic	Zirkonia ceramic
Material: bulkhead protective cap IP68	-	brass, 5 µm Ni plated	brass, 5 µm Ni plated
Durability (mating cycles)	≥ 100	≥ 100	≥ 100
Material: cap nut, sleeve	brass, 5 µm Ni plated	-	-
Material: O-ring	silicone red	silicone red	silicone red
Material: sealing insert	silicone transparent	-	-
Material: protection cap IP68	brass, 5 µm Ni plated	-	-
Material: body	PBT UL94 V0 black	-	-
Material: crimp sleeve	Copper nickel-plated	-	-
Material: ferrule	Multimode: zirconia 127 µm -0/+4 µm; Singelmode: zirconia 125.5 µm -0/+1 µm	-	-
Material: protection cap	plastic	plastic	plastic
Buffered optical fiber diameter	0.9 mm	-	-
Subcable diameter	1.8 - 2.0 mm	-	-
Overall cable diameter	4.0 - 9.5 mm	-	-
Environmental Requirements			
Strength of coupling mechanism	-	40 N	40 N
Ambient temperature	-40°C to +85°C	-40°C to +85°C	-40°C to +85°C
Optical Characteristics			
Reproducbility insertion loss	max. 0.1 dB	max. 0.1 dB	max. 0.1 dB

4.2 TOC Series LC Duplex

4.2.1 TOC plug set IP68 LC Duplex

Performance Characteristics

- single cable diameter: 2.0 mm
- cable outer diameter: 4 - 9.5 mm
- LC holding frame with elongated release latch and strain relief

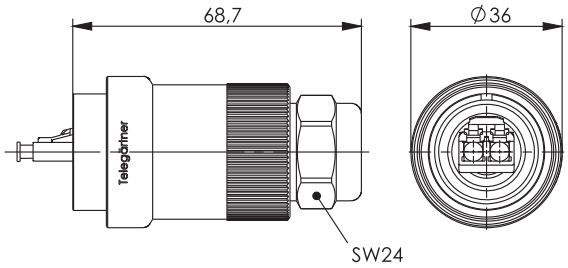

Order no.	Short name	Description	Remarks
J68070A0000	TOC plug set IP68	LC Duplex Multimode	brass, nickel plated
J68070A0001	TOC plug set IP68	LC/APC Duplex Singlemode	brass, nickel plated
J68070A0008	TOC plug set IP68	LC Duplex, Singlemode	brass, nickel plated

4.2.2 TOC Bulkhead Set IP68 LC Duplex

Performance Characteristics

- 4-hole mounting, mounting cut out Ø 30.5 mm
- optional for SFP+ Transceiver

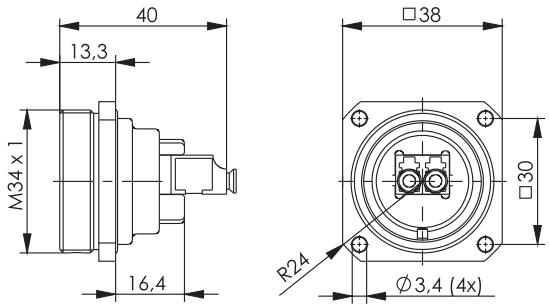

Order no.	Short name	Description	Remarks
J68071A0000	TOC Bulkhead Set IP68	LC Duplex adaptor Singlemode/Multimode	brass, nickel plated
J68071A0001	TOC Bulkhead Set IP68	LC/APC Duplex adaptor, Singlemode	brass, nickel plated

Performance Characteristics

- suitable for TOC plug set IP68 LC Duplex
- mounting on DIN rail TH35 by means of adaptor (J06000A0056)

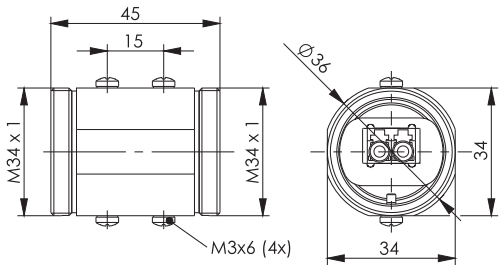

Order no.	Short name	Description	Remarks
J68071A0004	TOC Coupler IP68	LC Duplex adaptor Singlemode/Multimode	brass, nickel plated

TOC Series MPO/MTP® 4.3

The TOC Series using MPO/MTP® connectors and adaptors go down extremely well due to their ease of handling and flexibility when installing numerous fibers in an IP68 connection. The best solution is to insert factory made MPO/MTP® assemblies (either male or female designs) into the TOC housing. The extended release pin enables problem-free engagement and disengagement of the MPO/MTP® connectors with QSFP/SFP transceivers or with MPO/MTP® adaptors even in the tightest of installations. Furthermore, the varying mounting positions of the SFP transceivers can be balanced on all axes. The TOC connector housing is designed for cables with outer diameters up to 9.5 mm. For cable extensions, the TOC adaptor using MPO/MTP® bulkhead adaptors can be integrated into the wiring structure.

Performance Characteristics

- plug & adaptor acc. to IEC 61755-3-1
- Singlemode/Multimode (PC) & Singlemode (APC) types
- Insertion Loss: plug: Multimode max. 0.5 dB (typ. 0.2), Singlemode APC max. 0.7 dB (typ. 0.25)
- temperature range: -25° to +55°C
- Return Loss: plug: Multimode min. 30 dB, Singlemode PC min. 40 dB, APC min. 60 dB
- protection class IP68 acc. to IEC 60529
- protection cap with protection class IP68

	TOC plug set	TOC bulkhead set	TOC coupler
Standards			
Generic cabling systems	ISO/IEC 11801, EN 50173-1		
Connectors	IEC 61755-3-31		
Degrees of protection provided by enclosures (IP code)	IEC 60529		
Fiber optic interconnectiong devices and passive components- Basic test and measurement procedures	IEC61300-2-x; IEC61300-3-x		
Mechanical Characteristics			
Durability (mating cycles)	≥ 100	≥ 100	≥ 100
Material: adaptor housing	-	-	brass, 5 µm Ni plated
Material: screw	-	-	Stainless steel
Material: adaptor housing	-	-	Plastic black
Material: flange housing	-	brass, 5 µm Ni plated	-
Material: protective cap IP68	brass, 5 µm Ni plated	brass, 5 µm Ni plated	brass, 5 µm Ni plated
Material: cap nut, sleeve	brass, 5 µm Ni plated	-	-
Material: O-ring	silicone red	silicone red	silicone red
Material: sealing insert	silicone transparent	-	-
Material: body	plastic	-	-
Material: crimp sleeve	brass	-	-
Material: ferrule	PPS	-	-
Material: protection cap	plastic	plastic	plastic
Buffered optical fiber diameter	0.9 mm	-	-
Subcable diameter	1.8 - 2.0 mm	-	-
Overall cable diameter	4.0 - 9.5 mm	-	-
Ambient temperature	-25° C to +55° C	-25° C to +55° C	-25° C to +55° C

4.3 TOC Series MPO/MTP®

4.3.1 TOC Plug Set IP68 MTP/MPO®

Performance Characteristics

- single cable diameter: 3,0 mm
- cable outer diameter: 4 - 9.5 mm
- MPO/MTP® holding frame with elongated lock-out release

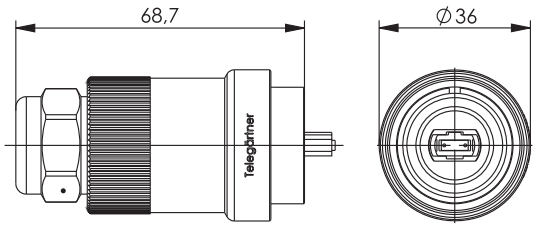

Order no.	Short name	Description	Remarks
J68070A0004	TOC plug set IP68	MPO/MTP® male, Multimode	brass, nickel plated
J68070A0005	TOC plug set IP68	MPO/MTP® male, APC Singlemode	brass, nickel- lated
J68070A0006	TOC plug set IP68	MPO/MTP® female, Multimode	brass, nickel plated
J68070A0007	TOC plug set IP68	MPO/MTP® female, APC Singlemode	brass, nickel plated

4.3.2 TOC Bulkhead Set IP68 MPO/MTP®

Performance Characteristics

- 4-hole mounting, mounting cut out Ø 30.5 mm
- optional for SFP+ Transceiver

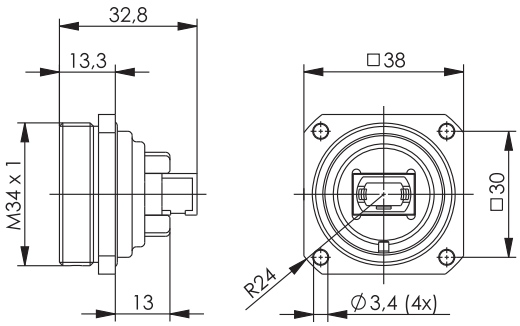

Order no.	Short name	Description	Remarks
J68071A0006	TOC Bulkhead Set IP68	MPO/MTP® adaptor Singlemode/Multimode	brass, nickel plated

Performance Characteristics

- suitable for TOC plug set IP68 MPO/MTP®
- mounting on DIN rail TH35 by means of adaptors (J06000A0056)

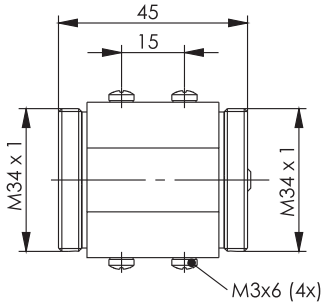

Order no.	Short name	Description	Remarks
J68071A0007	TOC Coupler IP68	MPO/MTP® adaptor Singlemode/Multimode	brass, nickel plated

Accessories for TOC Series 4.4

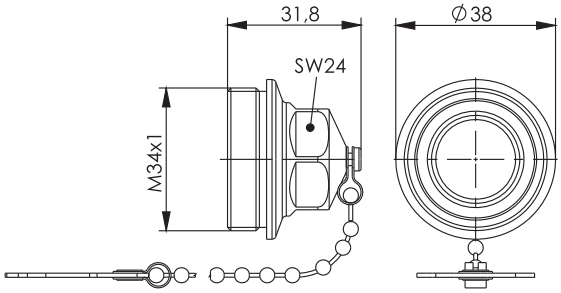

Order no.	Short name	Remarks
H60030A0001	TOC plug protection cap IP68	with chain; nickel plated brass

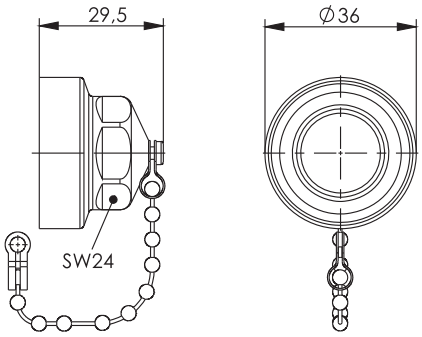

Order no.	Short name	Remarks
H60030A0000	TOC bulkhead protection cap IP68	with chain; nickel plated brass

5

RJ45 Connectors IP20

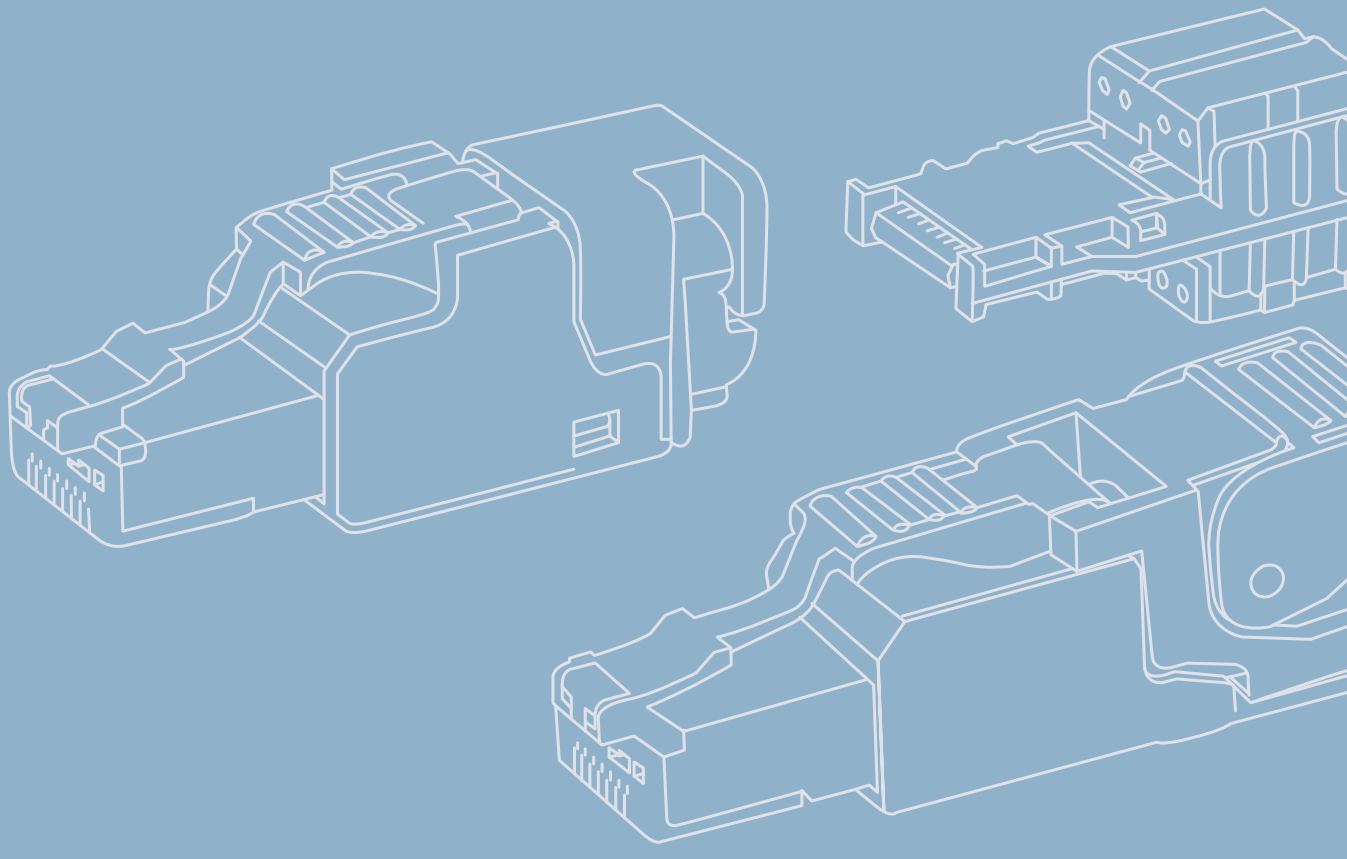

5 RJ45 Connectors IP20

	MP8(8)FS Cat.6_A STX RJ45 AWG24-27	STX RJ45 AWG22-26
Standards		
Connectors	IEC 60603-7-51	IEC 60603-7-51
Mechanical Characteristics		
Insertion force	≤ 30 N	≤ 30 N
Durability (mating cycles)	≥ 750	≥ 750
Material: contacts	phosphor bronze	tin bronze
Material: contact finish	Ni2.54Au0.8	min. 0.8 µm Au to 2 µm Ni
Material: connector housing	PC UL94 V0	zinc diecast, nickel plated
Material: insertion	PC UL94 V0	-
Material: cable boot	PVC UL94 V0 (Ø 6.3 mm / Ø 7.0 mm); PA6 UL94 V0 (Ø 6.0 mm)	-
Material: carrier	-	PA UL94 V0
Material: shielding housing	0.5 mm brass, 2 µm Ni	german silver
Material: contact IDC termination	-	tin bronze
Material: IDC termination finish	-	tin plated
Overal cable diameter	5.5 - 7.3 mm	5.5 - 8.5 mm
Mating requirements Cu-Conductor diamter: solid	0.36 - 0.51 mm (AWG 27/1 - 24/1)	0.41 - 0.64 mm AWG 26/1 - AWG 22/1
Mating requirements Cu-Conducter diameter: stranded	0.46 - 0.61 mm (AWG 27/7 - 24/7)	0.48 - 0.76 mm AWG 26/7 - AWG 22/7
Core diameter	0.85 - 1.05 mm	0.85 - 1.6 mm
Crimp tool	N00001A0002	-
Environmental Characteristics		
Protection against particulate ingress	IP2X	IP2X
Protection against water / immersion	IPX0	IPX0
Ambient temperature	-40° C to + 70° C	-40° C to + 70° C
Rapid change of temperature	-40° C to + 70° C / 25 cycles t=30 min	-40° C to + 70° C / 25 cycles t=30 min
Climatic damp heat	+25° C / +65° C / 93% RH // -10° C / 21 cycles	
Flowing mixed gas	+25°C / 73% RH / 4 days, H_2S / SO_2	
Climatic Characteristics		
Temperature range [°C]	-40°C to +70°C	-40°C to +70°C
UL	E244889	E244889
Electrical Characteristics		
Current carrying capacity at 50° C	1 A	1 A
PoE+ acc. to IEEE 802.3at	fulfilled	fulfilled
Transmission Characteristics		
Category 6_A (Component)	ISO/IEC 11801, EN 50173-1	-
Class E_A (Channel)	ISO/IEC 11801, EN 50173-1	ISO/IEC 11801, DIN EN 50173-1
10 Gigabit Ethernet acc. to IEEE 802.3an	fulfilled	fulfilled

	MFP8 Cat.6_A AWG 27-22	MFP8 Cat.6_A AWG 27-24	UFP8 Cat.6_A AWG 27-23	UFP8 Cat.6_A AWG 23-22
Standards				
Connectors	IEC 60603-7-51	IEC 60603-7-51	IEC 60603-7-41	IEC 60603-7-41
Mechanical Characteristics				
Insertion force	≤ 30 N	≤ 30 N	≤ 20 N	≤ 20 N
Durability (mating cycles)	≥ 750	≥ 750	≥ 750	≥ 750
Reusable contacts	≤4 cycles	≤4 cycles	≤4 cycles	≤4 cycles
Material: contacts	spring steel	spring steel	spring steel	spring steel
Material: contact finish	Ni1.2Au0.8	Ni1.2Au0.8	Ni1.2Au0.8	Ni1.2Au0.8
Material connector housing	PC UL94 V0	PC UL94 V0	PC UL94 V0	PC UL94 V0
Material: PCB	FR4 UL 94 V0	FR4 UL 94 V0	FR4 UL 94 V0	FR4 UL 94 V0
Material: piercing contacts	phosphor bronze tinned			
Material: shield contact	brass, nickel plated		-	-
Material: wire pair prersorting	PC UL94 V0 white	PC UL94 V0 grey	PC UL94 V0 grey	PC UL94 V0 grey
Material uplock hook	PBT UL94 V0	PBT UL94 V0	PBT UL94 V0	PBT UL94 V0
Material: shielding housing	zinc diecast, nickel plated		-	-
Material: cable clamp	PBT UL94 V0	PBT UL94 V0	PC UL94 V0	PC UL94 V0
Material: dust cap	PBT UL94 V0	PBT UL94 V0	PBT UL94 V0	PBT UL94 V0

RJ45 Connectors IP20

	MFP8 Cat.6_A AWG 27-22	MFP8 Cat.6_A AWG 27-24	UFP8 Cat.6_A AWG 27-23	UFP8 Cat.6_A AWG 23-22
Mechanical Characteristics				
Mating requirements Cu-Conductor diameter: solid	0.51 - 0.64 mm (AWG 24/1-22/1)	0.41 - 0.51 mm (AWG 26/1-24/1)	0.51 - 0.57 mm (AWG 24/1-23/1)	0.57 - 0.64 mm (AWG 23/1-22/1)
Mating requirements Cu-Conductor diameter: stranded	0.46 - 0.76 mm (AWG 27/7-22/7)	0.46 - 0.61 mm (AWG 27/7-24/7)	0.46 - 0.65 mm (AWG 27/7-23/7)	0.65 - 0.76 mm (AWG 23/7-22/7)
Mating requirements Cu-Conductor diameter: stranded*	0.61 - 0.78 mm (AWG 24-22/19)	0.51 mm (AWG 26/19)	0.51 mm (AW G26/19)	0.61 - 0.78 mm (AWG 24-22/19)
Core diameter	1.0 - 1.6 mm	0.85 - 1.1 mm	0.85 - 1.1 mm	1.1 - 1.6 mm
Overall cable diameter	5.0 - 9.0 mm	5.0 - 9.0 mm	5.5 - 8.5 mm	5.5 - 8.5 mm
Climatic Characteristics				
Temperature range [°C]	-40°C to +85°C	-40°C to +85°C	-40°C to +70°C	-40°C to +70°C
UL	E244889	E244889	E244889	E244889
Electrical Characteristics				
Current carrying capacity at 50° C	1 A	1 A	1 A	1 A
PoE+ acc. to IEEE 802.3at	fulfilled	fulfilled	fulfilled	fulfilled
Transmission Characteristics				
10 Gigabit Ethernet acc. to IEEE 802.3an	fulfilled	fulfilled	fulfilled	fulfilled

*approval of cable by Telegärtner Karl Gärtner GmbH required

	MFP84x90 Cat.6_A	MFP8 IE Cat.6_A
Standards		
Connectors	IEC 60603-7-51	IEC 60603-7-51
Mechanical Characteristics		
Insertion force	≤ 30 N	≤ 30 N
Durability (mating cycles)	≥ 750	≥ 750
Reusable contacts	≤ 4 cycles	≤ 4 cycles
Material: contacts	spring steel	spring steel
Material: contact finish	Ni1.2Au0.8	Ni1.2Au0.8
Material: connector housing	zinc diecast, nickel plated	zinc diecast, nickel plated
Material: PCB	FR4 UL 94 V0	FR4 UL 94 V0
Material: piercing contacts	phosphor bronze tinned	phosphor bronze tinned
Material: shield contact	brass, nickel plated	brass, nickel plated
Material: wire pair presorting	PC UL94 V0 white	PC UL94 V0 white
Material: uplock hook	PBT UL94 V0	PBT UL94 V0
Material: shielding housing	zinc diecast, nickel plated	zinc diecast, nickel plated
Material: protection cap	PBT UL94 V0	PBT UL94 V0
Mating Requirements Cu-Conductor diameter: solid	0.51 - 0.64 mm (AWG24/1-22/1)	0.51 - 0.64 mm (AWG24/1-22/1)
Mating Requirements Cu-Conductor diameter: stranded	0.46 - 0.76 mm (AWG27/7-22/7)	0.46 - 0.76 mm (AWG27/7-22/7)
Mating Requirements Cu-Conductor diameter: stranded*	0.61 - 0.78 mm (AWG24-22/19)	0.61 - 0.78 mm (AWG24-22/19)
Core Diameter	1.0 - 1.6 mm	1.0 - 1.6 mm
Overall cable diameter	5.5 - 10.0 mm	6.0 - 10.0 mm
Climatic Characteristics		
Temperature range [°C]	-40°C to +85°C	-40°C to +85°C
UL	E244889	E244889
Electrical Characteristics		
Current carrying capacity at 50°C	1 A	1 A
PoE+ acc to IEEE 802.3at	Adequate for Power over Ethernet+	Adequate for Power over Ethernet+
Transmission Characteristics		
10 Gigabit Ethernet acc. to IEEE 802.3an	Adequate for 10 Gigabit Ethernet	Adequate for 10 Gigabit Ethernet

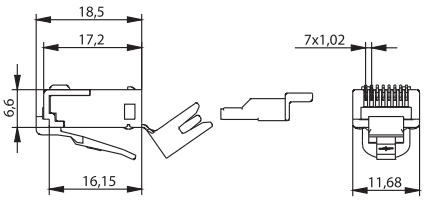

Order no.	Short name	Remarks
J00026A0165	RJ45 plug MP8(8) FS Cat.6_A	8-way fully shielded with wire presorting; AWG 24-27 (stranded and solid); please order cable boot separately

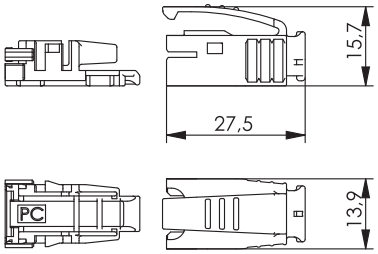

Order no.	Short name	Remarks	Colour
H86011A0000	STX cable boot for STX IP20 RJ45 plug (J80026A0000; J00026A0165)	for cable diameter 5.0 - 7.3 mm	white
H86011A0001	STX cable boot for STX IP20 RJ45 plug (J80026A0000; J00026A0165)	for cable diameter 5.0 - 7.3 mm	grey
H86011A0002	STX cable boot for STX IP20 RJ45 plug (J80026A0000; J00026A0165)	for cable diameter 5.0 - 7.3 mm	orange
H86011A0003	STX cable boot for STX IP20 RJ45 plug (J80026A0000; J00026A0165)	for cable diameter 5.0 - 7.3 mm	blue
H86011A0004	STX cable boot for STX IP20 RJ45 plug (J80026A0000; J00026A0165)	for cable diameter 5.0 - 7.3 mm	yellow
H86011A0005	STX cable boot for STX IP20 RJ45 plug (J80026A0000; J00026A0165)	for cable diameter 5.0 - 7.3 mm	green
H86011A0006	STX cable boot for STX IP20 RJ45 plug (J80026A0000; J00026A0165)	for cable diameter 5.0 - 7.3 mm	black

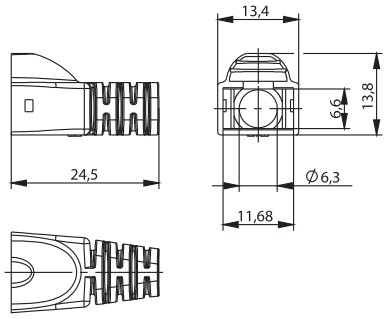

Order no.	Short name	Remarks
B00080A0089	Cable boot for MP8 FS (J00026A0165)	grey RAL 7035, Ø 6,3 mm, with latch protection
B00080B0089	Cable boot for MP8 FS (J00026A0165)	red RAL 3017, Ø 6,3 mm, with latch protection
B00080C0089	Cable boot for MP8 FS (J00026A0165)	blue RAL 5015, Ø 6,3 mm, with latch protection
B00080D0089	Cable boot for MP8 FS (J00026A0165)	yellow RAL 1021, Ø 6,3 mm, with latch protection
B00080E0089	Cable boot for MP8 FS (J00026A0165)	green RAL 6016, Ø 6,3 mm, with latch protection
B00080F0089	Cable boot for MP8 FS (J00026A0165)	black RAL 9011, Ø 6,3 mm, with latch protection

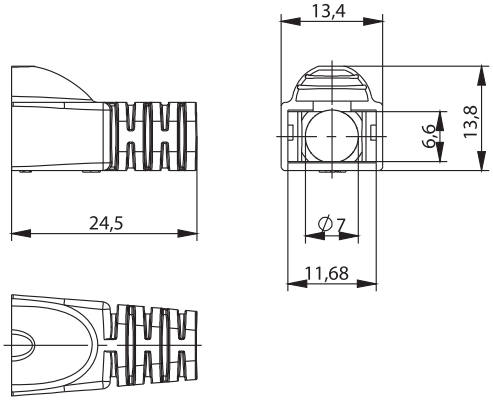

Order no.	Short name	Remarks
B00080A0090	Cable boot for MP8 FS (J00026A0165)	grey RAL 7035, Ø 7,0 mm, with latch protection
B00080B0090	Cable boot for MP8 FS (J00026A0165)	red RAL 3017, Ø 7,0 mm, with latch protection
B00080C0090	Cable boot for MP8 FS (J00026A0165)	blue RAL 5015, Ø 7,0 mm, with latch protection
B00080D0090	Cable boot for MP8 FS (J00026A0165)	yellow RAL 1021, Ø 7,0 mm, with latch protection
B00080E0090	Cable boot for MP8 FS (J00026A0165)	green RAL 6016, Ø 7,0 mm, with latch protection
B00080F0090	Cable boot for MP8 FS (J00026A0165)	black RAL 9011, Ø 7,0 mm, with latch protection

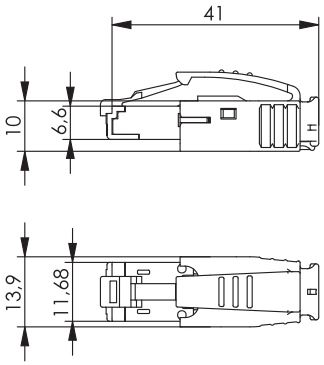

Order no.	Short name	Remarks
J80026A0001	STX IP20 RJ45 plug Cat.6_A	AWG24-27, with cable boot (black)

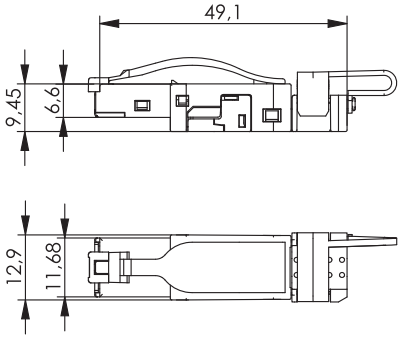

Order no.	Short name	Remarks
J80026A0003	STX IP20 RJ45 plug Cat.6 Class E_A	AWG22-26, pin assignment T568A, T568B and PROFINET, field assembly
J80026A0045	STX IP20 RJ45 plug Cat.6 Class E_A	AWG22-26, with printed wire presorting acc. to T568A, field assembly
J80026A0046	STX IP20 RJ45 plug Cat.6 Class E_A	AWG22-26, with printed wire presorting acc. to T568B, field assembly
J80026A0047	STX IP20 RJ45 plug Cat.6 Class E_A	AWG22-26, with printed wire presorting acc. to PROFINET, field assembly

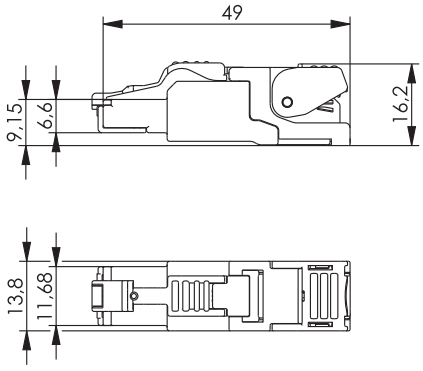

Order no.	Short name	Remarks
J00026A2000	MFP8 T568 A Cat.6_A	AWG 24/1-22/1, AWG 27/7-22/7, incl. pre-assembled protection cap
J00026A2001	MFP8 T568 B Cat.6_A	AWG 24/1-22/1, AWG 27/7-22/7, incl. pre-assembled protection cap
J00026A2002	MFP8 PROFINET	AWG 24/1-22/1, AWG 27/7-22/7, incl. pre-assembled protection cap
J00026A2004	MFP8 T568 A Cat.6_A	AWG 26/1-24/1, AWG 27/7-24/7, incl. pre-assembled protection cap
J00026A2003	MFP8 T568 B Cat.6_A	AWG 26/1-24/1, AWG 27/7-24/7, incl. pre-assembled protection cap

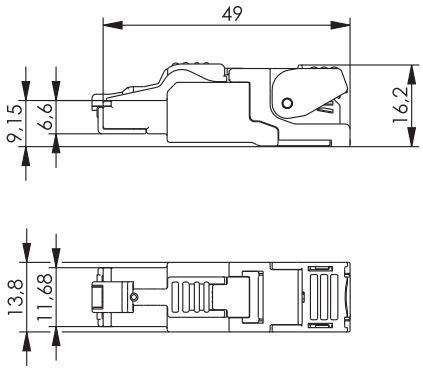

Order no.	Short name	Remarks	Type
J00026A2110	MFP8 T568 A Cat.6_A	AWG 24/1-22/1, AWG 27/7-22/7, incl. pre-assembled protection cap	blister package (10 pcs.)
J00026A2111	MFP8 T568 B Cat.6_A	AWG 24/1-22/1, AWG 27/7-22/7, incl. pre-assembled protection cap	blister package (10 pcs.)
J00026A2112	MFP8 PROFINET	AWG 24/1-22/1, AWG 27/7-22/7, incl. pre-assembled protection cap	blister package (10 pcs.)
J00026A2114	MFP8 T568 A Cat.6_A	AWG 26/1-24/1, AWG 27/7-24/7, incl. pre-assembled protection cap	blister package (10 pcs.)
J00026A2113	MFP8 T568 B Cat.6_A	AWG 26/1-24/1, AWG 27/7-24/7, incl. pre-assembled protection cap	blister package (10 pcs.)

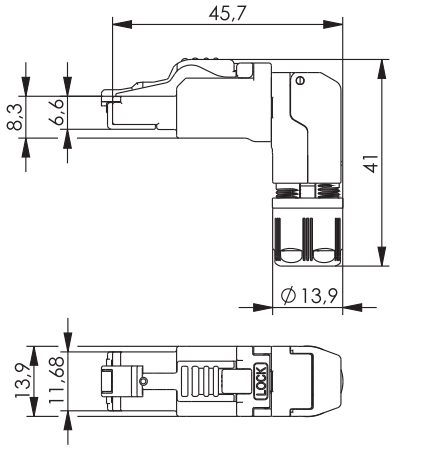

Order no.	Short name	Remarks
J00026A4000	MFP8-4x90 T568A Cat.6_A	AWG 24/1-22/1, AWG 27/7-22/7, incl. pre-assembled protection cap
J00026A4001	MFP8-4x90 T568B Cat.6_A	AWG 24/1-22/1, AWG 27/7-22/7, incl. pre-assembled protection cap
J00026A4002	MFP8-4x90 PROFINET	AWG 24/1-22/1, AWG 27/7-22/7, incl. pre-assembled protection cap
J00026A4004	MFP8-4x90 T568A Cat.6_A	AWG 26/1-24/1, AWG 27/7-24/7, incl. pre-assembled protection cap
J00026A4003	MFP8-4x90 T568B Cat.6_A	AWG 26/1-24/1, AWG 27/7-24/7, incl. pre-assembled protection cap

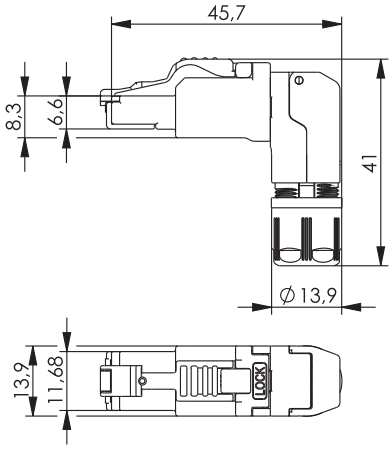

Order no.	Short name	Remarks	Type
J00026A4110	MFP8-4x90 T568A Cat.6$_A$	AWG 24/1-22/1, AWG 27/7-22/7, incl. pre-assembled protection cap	blister package (10 pcs.)
J00026A4111	MFP8-4x90 T568B Cat.6$_A$	AWG 24/1-22/1, AWG 27/7-22/7, incl. pre-assembled protection cap	blister package (10 pcs.)
J00026A4112	MFP8-4x90 PROFINET	AWG 24/1-22/1, AWG 27/7-22/7, incl. pre-assembled protection cap	blister package (10 pcs.)
J00026A4114	MFP8-4x90 T568A Cat.6$_A$	AWG 26/1-24/1, AWG 27/7-24/7, incl. pre-assembled protection cap	blister package (10 pcs.)
J00026A4113	MFP8-4x90 T568B Cat.6$_A$	AWG 26/1-24/1, AWG 27/7-24/7, incl. pre-assembled protection cap	blister package (10 pcs.)

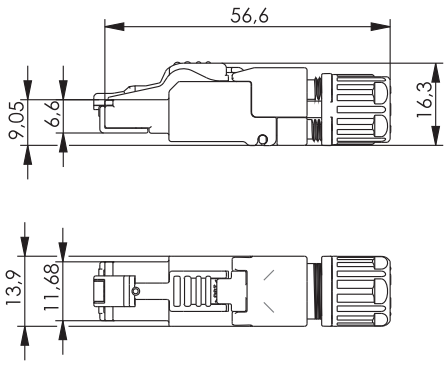

Order no.	Short name	Remarks
J00026A5000	MFP8 IE T568 A Cat.6$_A$	AWG 24/1-22/1, AWG 27/7-22/7, incl. pre-assembled protection cap
J00026A5001	MFP8 IE T568 B Cat.6$_A$	AWG 24/1-22/1, AWG 27/7-22/7, incl. pre-assembled protection cap
J00026A5002	MFP8 IE PROFINET	AWG 24/1-22/1, AWG 27/7-22/7, incl. pre-assembled protection cap
J00026A5004	MFP8 IE T568 A Cat.6$_A$	AWG 26/1-24/1, AWG 27/7-24/7, incl. pre-assembled protection cap
J00026A5003	MFP8 IE T568 B Cat.6$_A$	AWG 26/1-24/1, AWG 27/7-24/7, incl. pre-assembled protection cap

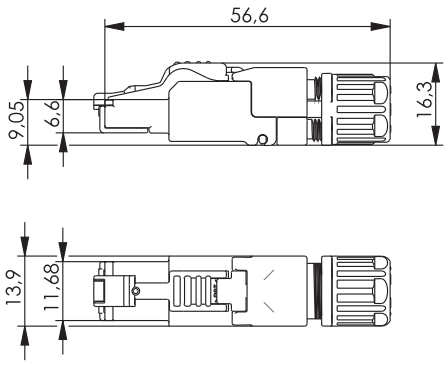

Order no.	Short name	Remarks	Type
J00026A5110	MFP8 IE T568 A Cat.6$_A$	AWG 24/1-22/1, AWG 27/7-22/7, incl. pre-assembled protection cap	blister package (10 pcs.)
J00026A5111	MFP8 IE T568 B Cat.6$_A$	AWG 24/1-22/1, AWG 27/7-22/7, incl. pre-assembled protection cap	blister package (10 pcs.)
J00026A5112	MFP8 IE PROFINET	AWG 24/1-22/1, AWG 27/7-22/7, incl. pre-assembled protection cap	blister package (10 pcs.)
J00026A5114	MFP8 IE T568 A Cat.6$_A$	AWG 26/1-24/1, AWG 27/7-24/7, incl. pre-assembled protection cap	blister package (10 pcs.)
J00026A5113	MFP8 IE T568 B Cat.6$_A$	AWG 26/1-24/1, AWG 27/7-24/7, incl. pre-assembled protection cap	blister package (10 pcs.)

Order no.	Short name	Remarks	Type
F00020A2130	MFP8 wire manager T568A	AWG 24/1-AWG 22/1, AWG 27/7-AWG 22/7	blister package (30 pcs.)
F00020A2131	MFP8 wire manager T568B	AWG 24/1-AWG 22/1, AWG 27/7-AWG 22/7	blister package (30 pcs.)
F00020A2132	MFP8 PROFINET	AWG 24/1-AWG 22/1, AWG 27/7-AWG 22/7	blister package (30 pcs.)
F00020A2134	MFP8 wire manager T568A	AWG 26/1-AWG 24/1, AWG 27/7-AWG 24/7	blister package (30 pcs.)
F00020A2133	MFP8 wire manager T568B	AWG 26/1-AWG 24/1, AWG 27/7-AWG 24/7	blister package (30 pcs.)

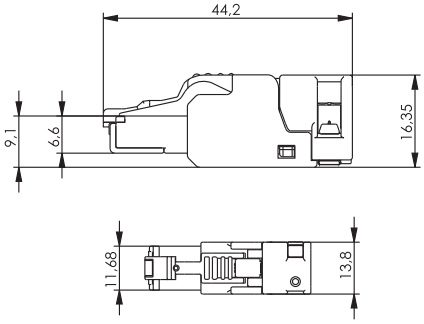

Order no.	Short name	Remarks
J00026A3000	UFP8 T568A Cat.6_A	AWG 24/1-23/1, AWG 27/7-23/7, with pre-assembled protection cap
J00026A3001	UFP8 T568B Cat.6_A	AWG 24/1-23/1, AWG 27/7-23/7, with pre-assembled protection cap
J00026A3002	UFP8 T568A Cat.6_A	AWG 23/1-22/1, AWG 23/7-22/7, with pre-assembled protection cap
J00026A3003	UFP8 T568B Cat.6_A	AWG 23/1-22/1, AWG 23/7-22/7, with pre-assembled protection cap

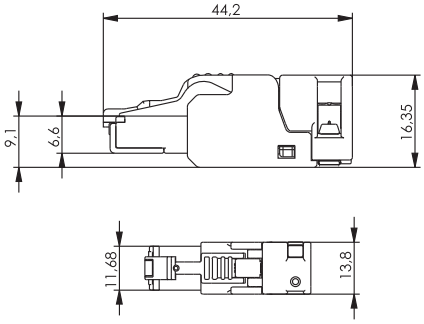

Order no.	Short name	Remarks	Type
J00026A3110	UFP8 T568A Cat.6_A	AWG 24/1-23/1, AWG 27/7-23/7, with pre-assembled protection cap	blister package (10 pcs.)
J00026A3111	UFP8 T568B Cat.6_A	AWG 24/1-23/1, AWG 27/7-23/7, with pre-assembled protection cap	blister package (10 pcs.)
J00026A3112	UFP8 T568A Cat.6_A	AWG 23/1-22/1, AWG 23/7-22/7, with pre-assembled protection cap	blister package (10 pcs.)
J00026A3113	UFP8 T568B Cat.6_A	AWG 23/1-22/1, AWG 23/7-22/7, with pre-assembled protection cap	blister package (10 pcs.)

RJ45 Connectors IP20

Order no.	Short name	Remarks	Type
F00020A3130	UFP8 wire manager T568A	AWG 24/1-AWG 23/1; AWG 27/7-AWG 23/7	blister package (30 pcs.)
F00020A3131	UFP8 Adernmanager T568B	AWG 24/1-AWG 23/1; AWG 27/7-AWG 23/7	blister package (30 pcs.)
F00020A3132	UFP8 wire manager T568A	AWG 23/1-AWG 22/1; AWG 23/7-AWG 22/7	blister package (30 pcs.)
F00020A3133	UFP8 Adernmanager T568B	AWG 23/1-AWG 22/1; AWG 23/7-AWG 22/7	blister package (30 pcs.)

Order no.	Short name	Type
M06000A0067	Check gauge for RJ45 MP8(8) FS plug	contact height minimum dimension
M06000A0068	Check gauge for RJ45 MP8(8) FS plug	contact height maximum dimension

6

FO Connectors

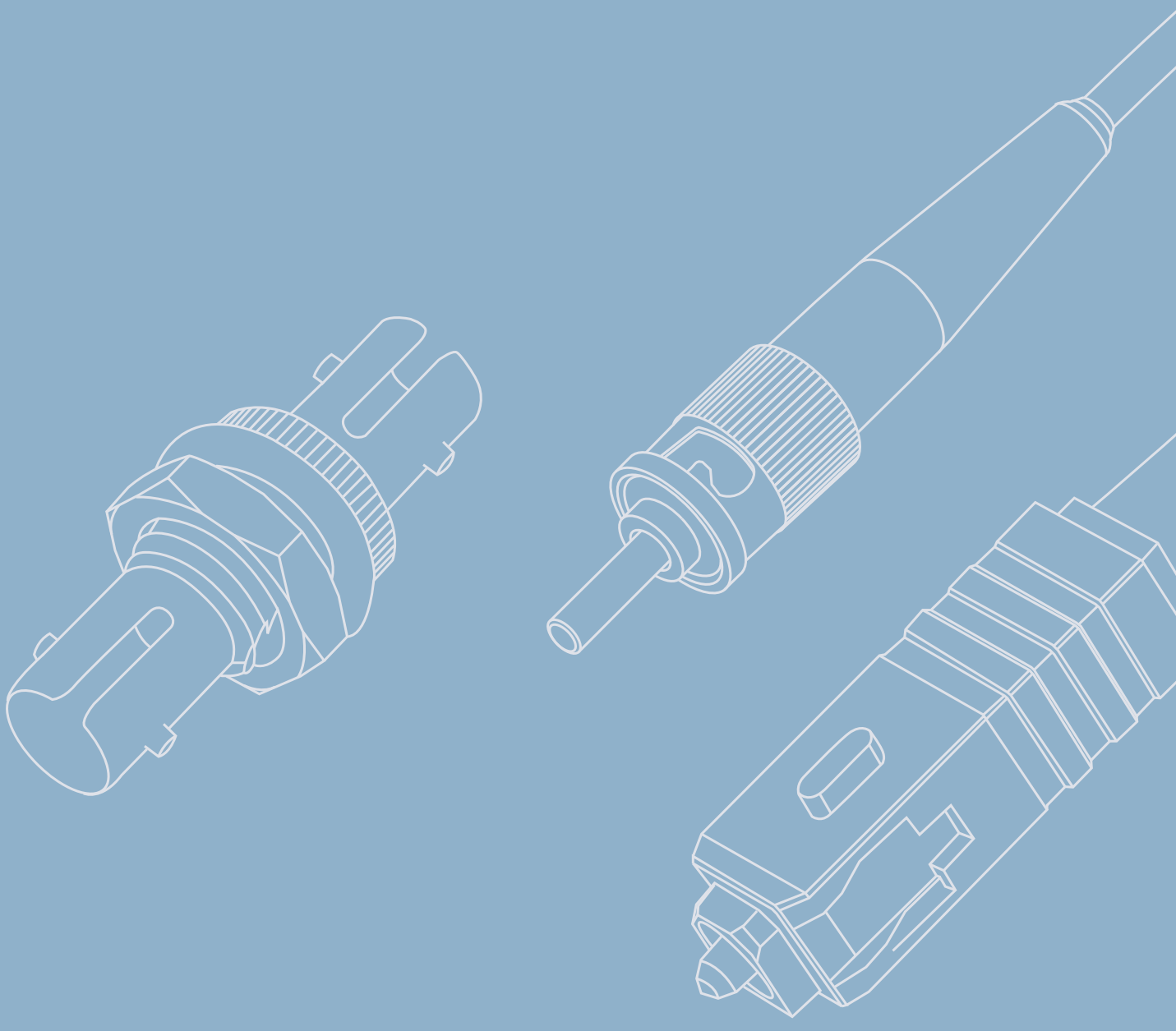

6 FO Connectors

6.1 ST Connector 177
6.1.1 ST Plugs 177
6.1.2 ST Adaptors 178

6.2 SC Connector 178
6.2.1 SC Plugs 179
6.2.2 SC Adaptors 180

6.3 LC Connector 182
6.3.1 LC Plugs 182
6.3.2 LC Plug EasyGrip 182
6.3.3 LC Adaptors 182

6.4 E2000 Adaptors 184

6.5 ST/SC Duplex Adaptors 184

Durable, precise and reliable: Telegärtner fiber optic connectors with ferrule and coupling sleeve made of zirconia ceramics exceed the specifications of the relevant international standards. The APC types (Angled Physical Contact) with 8° angled polished ferrules offer return loss values of more than 60 dB and meet highest expectations.

Performance Characteristics

- Available for Singlemode and Multimode
- For 0.9 mm fibers and 3.2 mm cordage
- Multimode 50 µ, 62,5 µ, 200 µ and 980 µ
- Singlemode 9 µ

ST Connectors 6.1

	ST Connectors	ST Connectors for POF / PCF
Mechanical Characteristics		
Type	BFOC/2,5 acc. to IEC 61754-2	BFOC/2,5 similar IEC 61754-2
Durability (mating cycles)	≥ 1000	≥ 500
Hex crimp size for strain relief	3.4/4.52 x 10 mm; 3.65/4.52 mm	3.4/4.52 x 10 mm (3.25 for cable Ø 2.2)
Strain relief	≥100 N	≥100 N (Ø 3.6); ≥60 N (Ø 2.2)
Material: connector ferrule	Zirkonia ceramic	-
Material: adaptor split sleeve	Zirkonia ceramic or phosphor bronze	phosphor bronze
Material: connector body, fixing parts for adaptor	brass, nickel plated	brass, nickel plated
Material: bayonet coupling nut, connector body, adaptor housing	zinc diecast, nickel plated	zinc diecast, nickel plated
Material: crimp sleeve	copper, nickel plated	copper, nickel plated
Material: cable boot, dust caps	elastomer, flame retardant, non halogen	elastomer, flame retardant, non halogen
Climatic Characteristics		
Operating temperature in °C	-20° to +80° C	-20° to +80° C
Storage temperature in °C	-40° to +90° C	-40° to +90° C
Optical Characteristics		
Insertion loss: plug (factory assembly)	Multimode: max. 0.4 dB[1]; Singlemode: max. 0.5 dB[1]	POF: max. 1.5 dB; PCF: max. 1.0 dB
Insertion loss: Adapor (ceramic)	Multimode/Singlemode: max. 0.2 dB[1]	
Insertion loss: Adaptor (phosphor bronze)	Multimode: max. 0.2 dB[1]	
Return loss	Multimode: min. 30 dB[2]; Singlemode: min. 40 dB[2]	

1) Measurement procedure acc. to IEC 61300-3-4
2) Measurement procedure acc. to IEC 61300-3-6

ST Plugs 6.1.1

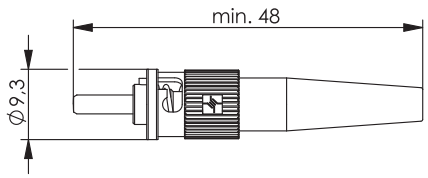

Order no.	Description	Fiber type	Remarks
J08010A0036	ST Connector Singlemode, ceramic/metal	E9/125	for cable Ø 1,8 - 2,2 mm
J08010A0008	ST Connector Singlemode, ceramic/metal	E9/125	for cable Ø 2,6 - 3,2 mm
J08010A0005	ST Connector Multimode, ceramic/metal	G50/125, G62,5/125	for fibers with secondary coating Ø 0,9 mm
J08010A0035	ST Connector Multimode, ceramic/metal	G50/125, G62,5/125	for cable Ø 1,8 - 2,2 mm
J08010A0007	ST Connector Multimode, ceramic/metal	G50/125, G62,5/125	for cable Ø 2,6 - 3,2 mm
J08010A0056	ST Connector for PCF, metal	PCF, S200/230	for cable Ø 1,8 - 2,2 mm and 2,6 - 3,2 mm
J08010A0016	ST Connector for POF, metal	POF, S980/1000	for cable Ø 2,2 mm without strain relief or Ø 3,6 mm with strain relief

6.1

6.1 ST Connectors

6.1.2 ST Adaptors

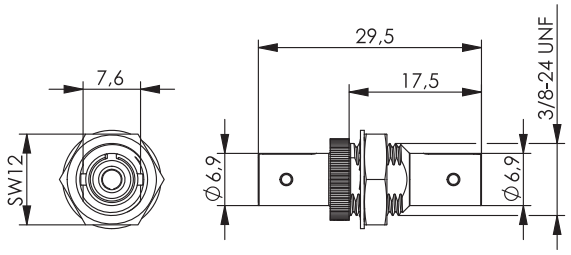

Order no.	Description	Installation	Mount. dim.
J08011A0002	ST Adaptor, Multimode and Singlemode, ceramic sleeve, metal housing	single hole mounting	Z64
J08011A0003	ST Adaptor, Multimode, phosphor bronze sleeve, metal housing	single hole mounting	Z64

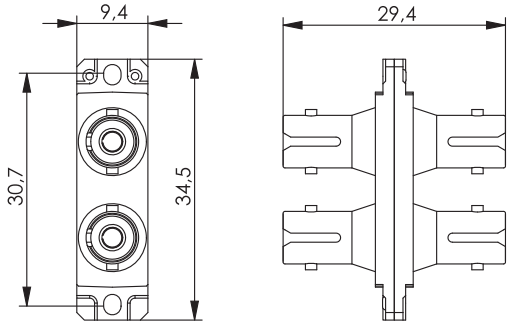

Order no.	Description	Installation	Mount. dim.
J08011A0017	ST-Duplex Adaptor, Multimode and Singlemode, ceramic sleeve, metal housing, incl. tapping screws	Flange mounting	Z93
J08011A0014	ST-Duplex Adaptor, Multimode, phosphor bronze sleeve, plastic housing, incl. tapping screws	Flange mounting	Z93

6.2 SC Connectors

Mechanical Characteristics	
Type	acc. to IEC 61754-4
Durability (mating cycles)	≥ 1000; POF/PCF: ≥ 500
Hex crimp size for strain relief	4.52 x 10 mm
Strain relief	≥100 N
Material: connector ferrule	Zirkonia ceramic, POF: german silver , PCF: nickel
Material: adaptor split sleeve	Zirkonia ceramic or phosphor bronze
Material: connector body	copper alloy, nickel plated
Material: plug housing, boot, dust caps	thermoplastic, flame retardant, non halogen
Material: adaptor housing	thermoplastic, flame retardant, non halogen, or zinc diecast, nickel plated
Material: retaining clip (adaptor)	stainless steel
Colour: connector housing / adaptor housing	Multimode: beige, blue, aqua, black, purple; Singlemode: blue; Singlemode APC: green; POF: yellow; PCF: red
Climatic Characteristics	
Operating temperature in °C	-20° to +80° C
Storage temperature in °C	-40° to +90° C
Optical Characteristics	
Insertion loss: plug (factory assembly)	Multimode: max. 0.4 dB[1]; Singlemode/Singlemode APC: max. 0.5 dB[1]; POF: 1.5 dB; PCF: 1.0 dB
Insertion loss: Adaptor	Multimode/Singlemode: max. 0.2 dB[1]; Singlemode APC: 0.2 dB[1]
Return loss: plug (factory assembly)	Multimode: min. 30 dB[2]; Singlemode: min. 40 dB[2]; Singlemode APC: min. 60 dB[2]

1) Measurement procedure acc. to IEC 61300-3-4
2) Measurement procedure acc. to IEC 61300-3-6

SC Plugs 6.2.1

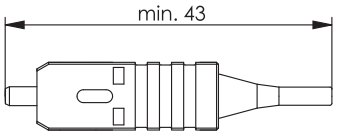

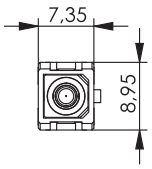

Order no.	Description	Fiber type	Remarks	Housing Colour
J08080A0006	SC Connector Singlemode, ceramic	E9/125	for fibers with secondary coating Ø 0,9 mm	blue
J08080A0018	SC Connector Singlemode, ceramic	E9/125	for cable Ø 1,8 - 2,2 mm	blue
J08080A0005	SC Connector Singlemode, ceramic	E9/125	for cable Ø 2,6 - 3,2 mm	blue
J08080A0002	SC Connector Multimode, ceramic	G50/125, G62,5/125	for fibers with secondary coating Ø 0,9 mm	blue
J08080A0016	SC Connector Multimode, ceramic	G50/125, G62,5/125	for cable Ø 1,8 - 2,2 mm	blue
J08080A0001	SC Connector Multimode, ceramic	G50/125, G62,5/125	for cable Ø 2,6 - 3,2 mm	blue
J08080A0037	SC Connector Multimode, ceramic	G50/125, G62,5/125	for fibers with secondary coating Ø 0,9 mm	beige
J08080A0043	SC Connector Multimode, ceramic	G50/125, G62,5/125	for cable Ø 1,8 - 2,2 mm	beige
J08080A0036	SC Connector Multimode, ceramic	G50/125, G62,5/125	for cable Ø 2,6 - 3,2 mm	beige
J08080A0048	SC Connector Multimode, ceramic	G50/125 OM3	for fibers with secondary coating Ø 0,9 mm	aqua
J08080A0047	SC Connector Multimode, ceramic	G50/125 OM3	for cable Ø 1,8 - 2,2 mm	aqua
J08080A0046	SC Connector Multimode, ceramic	G50/125 OM3	for cable Ø 2,6 - 3,2 mm	aqua
J08080A0052	SC Connector Multimode, ceramic	G50/125 OM4	for fibers with secondary coating Ø 0,9 mm	black
J08080A0053	SC Connector Multimode, ceramic	G50/125 OM4	for cable Ø 1,8 - 2,2 mm	black
J08080A0051	SC Connector Multimode, ceramic	G50/125 OM4	for cable Ø 2,6 - 3,2 mm	black
J88080A0008	STX IP20 SC Connector	PCF, S200/230	for cable Ø 2,6 - 3,2 mm	red
J88080A0000	STX IP20 SC Connector	POF, S980/1000	for cable Ø 2,2 mm	yellow

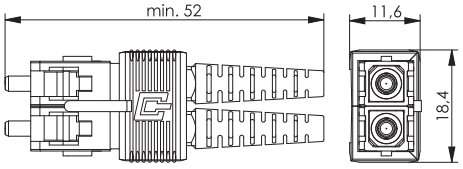

Order no.	Description	Fiber type	Remarks	Housing Colour
J88080A0005	STX IP20 SC-RJ Connector	E9/125	for cable Ø 2,6 - 3,2 mm	blue
J88080A0004	STX IP20 SC-RJ Connector	G50/125, G62,5/125	for cable Ø 2,6 - 3,2 mm	beige
J88080A0006	STX IP20 SC-RJ Connector	POF, S980/1000	for cable Ø 2,2 mm	yellow

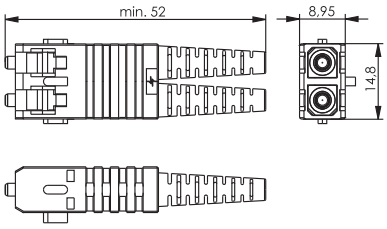

Order no.	Description	Fiber type	Remarks	Housing Colour
J88080A0020	STX IP20 SC-RJ Connector	E9/125	for cable Ø 2,6 - 3,0 mm	blue, one-piece
J88080A0019	STX IP20 SC-RJ Connector	G50/125, G62,5/125	for cable Ø 2,6 - 3,0 mm	beige, one-piece
J88080A0023	STX IP20 SC-RJ Connector	G50/125 OM3	for cable Ø 2,6 - 3,0 mm	aqua, one-piece
J88080A0021	STX IP20 SC-RJ Connector	POF	for cable Ø 2,6 - 3,0 mm	yellow, one-piece
J88080A0022	STX IP20 SC-RJ Connector	PCF	for cable Ø 2,6 - 3,0 mm	red, one-piece

6.2 SC Connectors

6.2.1 SC Plugs

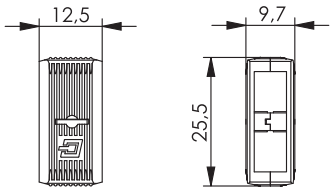

Order no.	Description	Remarks	Colour
B00042A0103	Clamp for SC connector (spacing acc. to SC Duplex)	packaging unit 10 pcs.	blue
B00042A0102	Clamp for SC connector (spacing acc. to SC Duplex)	packaging unit 10 pcs.	green
B00042A0101	Clamp for SC connector (spacing acc. to SC Duplex)	packaging unit 10 pcs.	beige
B00042A0159	Clamp for SC connector (spacing acc. to SC Duplex)	packaging unit 10 pcs.	aqua
B00042A0105	Clamp for SC connector (spacing acc. to SC Duplex)	packaging unit 10 pcs.	yellow
B00042A0107	Clamp for SC connector (spacing acc. to SC Duplex)	packaging unit 10 pcs.	red
B00042A0104	Clamp for SC connector (spacing acc. to SC Duplex)	packaging unit 10 pcs.	black

6.2.2 SC Adaptors

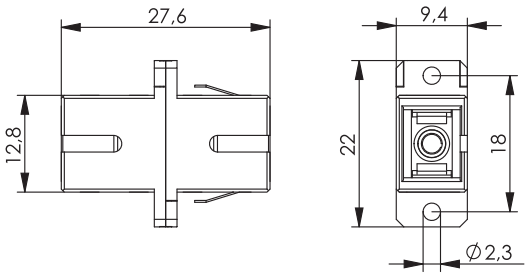

Order no.	Description	Installation	Mount. dim.	Housing Colour
J08081A0000	SC Adaptor, Multimode and Singlemode, ceramic sleeve, Plastic housing, incl. tapping screws	Snap-in or screw mounting	Z77	blue
J08081A0010	SC/APC Adaptor, Singlemode, ceramic sleeve, plastic housing, incl. tapping screws	Snap-in or screw mounting	Z77	green
J08081A0014	SC adaptor, Multimode, ceramic sleeve, plastic housing, incl. tapping screws	Snap-in or screw mounting	Z77	beige
J08081A0032	SC adaptor, Multimode, ceramic sleeve, plastic housing, incl. tapping screws	Snap-in or screw mounting	Z77	aqua
J08081A0036	SC adaptor, Multimode, ceramic sleeve, plastic housing, incl. tapping screws	Snap-in or screw mounting	Z77	black

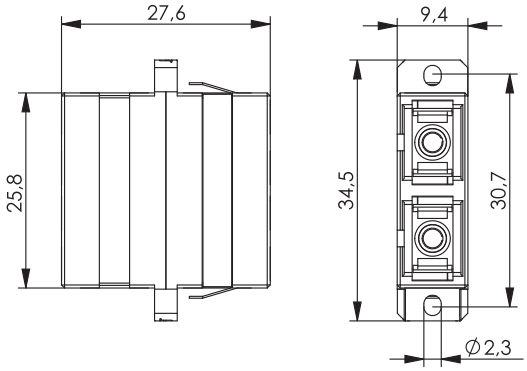

Order no.	Description	Installation	Mount. dim.	Housing Colour
J08081A0002	SC Duplex Adaptor, Multimode and Singlemode, ceramic sleeve, plastic housing, incl. tapping screws	Snap-in or screw mounting	Z93	blue
J08081A0006	SC Duplex Adaptor, Multimode and Singlemode, ceramic sleeve, metal housing, incl. tapping screws	Snap-in or screw mounting	Z93	metal
J08081A0011	SC/APC Duplex Adaptor, Singlemode, ceramic sleeve, plastic housing, incl. tapping screws	Snap-in or screw mounting	Z93	green
J08081A0016	SC Duplex adaptor, multimode, ceramic sleeve, plastic housing, incl.tapping screws	Snap-in or screw mounting	Z93	beige
J08081A0017	SC Duplex Adaptor, Multimode, phosphor bronze sleeve, plastic housing, incl. tapping screws	Snap-in or screw mounting	Z93	beige
J08081A0034	SC Duplex adaptor, multimode, ceramic sleeve, plastic housing, incl.tapping screws	Snap-in or screw mounting	Z93	aqua
J08081A0035	SC Duplex Adaptor, Multimode, phosphor bronze sleeve, plastic housing, incl. tapping screws	Snap-in or screw mounting	Z93	aqua
J08081A0037	SC Duplex adaptor, multimode, ceramic sleeve, plastic housing, incl.tapping screws	Snap-in or screw mounting	Z93	black
J08081A0038	SC Duplex Adaptor, Multimode, phosphor bronze sleeve, plastic housing, incl. tapping screws	Snap-in or screw mounting	Z93	black
J08081A0040	SC Duplex adaptor, multimode, ceramic sleeve, plastic housing, incl.tapping screws	Snap-in or screw mounting	Z93	violet
J08081A0041	SC Duplex Adaptor, Multimode, phosphor bronze sleeve, plastic housing, incl. tapping screws	Snap-in or screw mounting	Z93	violet

Order no.	Description	Housing Colour
B00012A0018	protection flap, self-closing, for SC Duplex adaptor	blue

6.3 LC Connectors

6.3.1 LC Connector

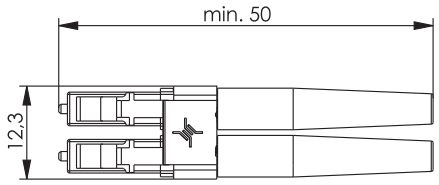

Order no.	Description	Fiber type	Remarks	Housing Colour
J08070A0000	LC Duplex Connector, Singlemode, ceramic	E9/125	for cable Ø 1,8 - 2,2 mm	blue
J08070A0009	LC Duplex Connector, Singlemode, ceramic	E9/125	for cable Ø 2,6 - 3,2 mm	blue
J08070A0002	LC Duplex Connector, Multimode, ceramic	G50/125; G62,5/125	for cable Ø 1,8 - 2,2 mm	beige
J08070A0010	LC Duplex Connector, Multimode, ceramic	G50/125; G62,5/125	for cable Ø 2,6 - 3,2 mm	beige
J08070A0034	LC Duplex Connector, Multimode, ceramic	G50/125 OM3	for cable Ø 1,8 - 2,2 mm	aqua
J08070A0033	LC Duplex Connector, Multimode, ceramic	G50/125 OM3	for cable Ø 2,6 - 3,2 mm	aqua
J08070A0044	LC Duplex Connector, Multimode, ceramic	G50/125 OM4	for cable Ø 1,8 - 2,2 mm	black
J08070A0043	LC Duplex Connector, Multimode, ceramic	G50/125 OM4	for cable Ø 2,6 - 3,2 mm	black

6.3.2 LC Plug EasyGrip

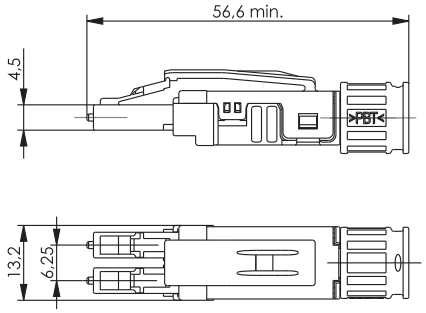

Order no.	Description	Fiber type	Remarks	Housing Colour	Clamp colour
J08070A0055	LC duplex plug EasyGrip	E9/125	für cable Ø 1,8 - 2,2 mm and 2,6 - 3,2 mm	blue	black
J08070A0056	LC/APC Duplex plug EasyGrip	E9/125	für cable Ø 1,8 - 2,2 mm and 2,6 - 3,2 mm	green	black
J08070A0057	LC duplex plug EasyGrip	G50/125; G62,5/125	für cable Ø 1,8 - 2,2 mm and 2,6 - 3,2 mm	beige	black
J08070A0058	LC duplex plug EasyGrip	G50/125 OM3	für cable Ø 1,8 - 2,2 mm and 2,6 - 3,2 mm	aqua	black
J08070A0059	LC duplex plug EasyGrip	G50/125 OM4	für cable Ø 1,8 - 2,2 mm and 2,6 - 3,2 mm	black	black

6.3.3 LC Adaptors

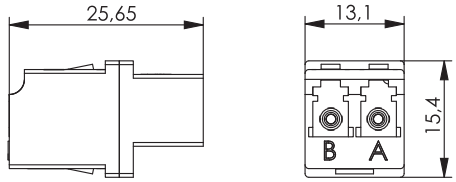

Order no.	Description	Installation	Mount. dim.	Housing Colour
J08071A0000	LC Duplex adaptor, Multimode and Singlemode, ceramic sleeve, plastic housing	Snap-in mounting	Z99	blue
J08071A0004	LC/APC Duplex adaptor, singlemode, ceramic sleeve, plastic housing	Snap-in mounting	Z99	green
J08071A0002	LC-Duplex adaptor, Multimode, ceramic sleeve, plastic housing	Snap-in mounting	Z99	beige
J08071A0017	LC-Duplex adaptor, Multimode, ceramic sleeve, plastic housing	Snap-in mounting	Z99	aqua
J08071A0030	LC-Duplex adaptor, Multimode, ceramic sleeve, plastic housing	Snap-in mounting	Z99	black
J08071A0048	LC-Duplex adaptor, Multimode, ceramic sleeve, plastic housing	Snap-in mounting	Z99	violet

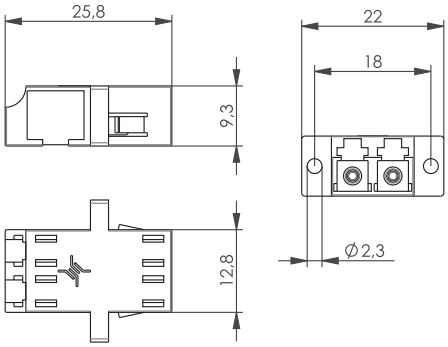

Order no.	Description	Installation	Mount. dim.	Housing Colour
J08071A0005	LC Duplex adaptor, Multimode and Singlemode, ceramic sleeve, plastic housing	Snap-in or screw mounting	Z77	blue
J08071A0021	LC/APC Duplex adaptor, Singlemode, ceramic sleeve, plastic housing	Snap-in or screw mounting	Z77	green
J08071A0010	LC-Duplex adaptor, Multimode, ceramic sleeve, plastic housing	Snap-in or screw mounting	Z77	beige
J08071A0028	LC-Duplex adaptor, Multimode, ceramic sleeve, plastic housing	Snap-in or screw mounting	Z77	aqua
J08071A0034	LC-Duplex adaptor, Multimode, ceramic sleeve, plastic housing	Snap-in or screw mounting	Z77	black
J08071A0052	LC-Duplex adaptor, Multimode, ceramic sleeve, plastic housing	Snap-in or screw mounting	Z77	violet

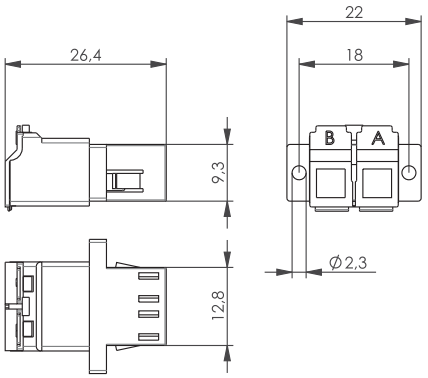

Order no.	Description	Installation	Mount. dim.	Housing Colour
J08071A0042	LC/APC Duplex adaptor, Singlemode, ceramic sleeve, plastic housing with dust and laser protection cover	Snap-in or screw mounting	Z77	green

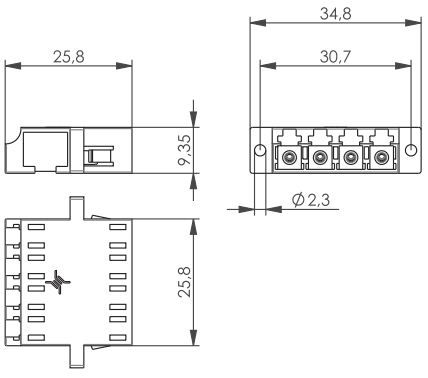

Order no.	Description	Installation	Mount. dim.	Housing Colour
J08071A0019	LC Quad Adaptor, Multimode and Singlemode, ceramic sleeve, plastic housing	Snap-in or screw mounting	Z93	blue
J08071A0029	LC/APC Quad adaptor, Singlemode, ceramic sleeve, plastic housing	Snap-in or screw mounting	Z93	green
J08071A0018	LC Quad adaptor, multimode, ceramic sleeve, plastic housing	Snap-in or screw mounting	Z93	beige
J08071A0020	LC Quad adaptor, multimode, ceramic sleeve, plastic housing	Snap-in or screw mounting	Z93	aqua
J08071A0031	LC Quad adaptor, multimode, ceramic sleeve, plastic housing	Snap-in or screw mounting	Z93	black
J08071A0044	LC Quad adaptor, multimode, ceramic sleeve, plastic housing	Snap-in or screw mounting	Z93	violet

6.4 E2000 Adaptors

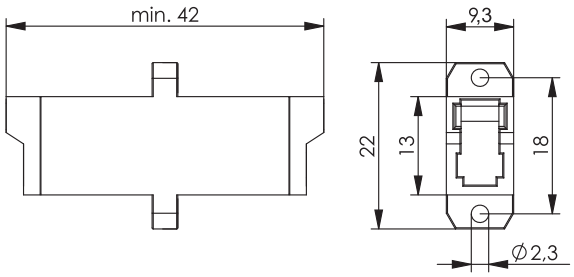

Order no.	Description	Installation	Mount. dim.	Housing Colour
J08051A0012	E2000/APC adaptor, Singlemode, ceramic sleeve, plastic housing, incl. screws M2	screw mounting	Z66	green

6.5 ST/SC Duplex Adaptors

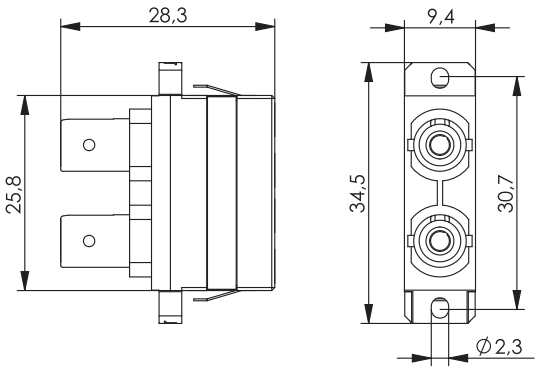

Order no.	Description	Installation	Mount. dim.	Housing Colour
J08082A0002	ST/SC-Duplex Adaptor, Multimode and Singlemode, ceramic sleeve, plastic housing, incl. tapping screws	Snap-in or screw mounting	Z93	blue
J08082A0010	ST/SC-Duplex Adaptor, Multimode, phosphor bronze sleeve, plastic housing, incl. tapping screws	Snap-in or screw mounting	Z93	beige
J08082A0012	ST/SC-Duplex Adaptor, Multimode, phosphor bronze sleeve, plastic housing, incl. tapping screws	Snap-in or screw mounting	Z93	aqua
J08082A0007	ST/SC-Duplex Adaptor, Multimode and Singlemode, ceramic sleeve, metal housing, incl. tapping screws	Snap-in or screw mounting	Z93	metal

7

RJ45 Patch Cords

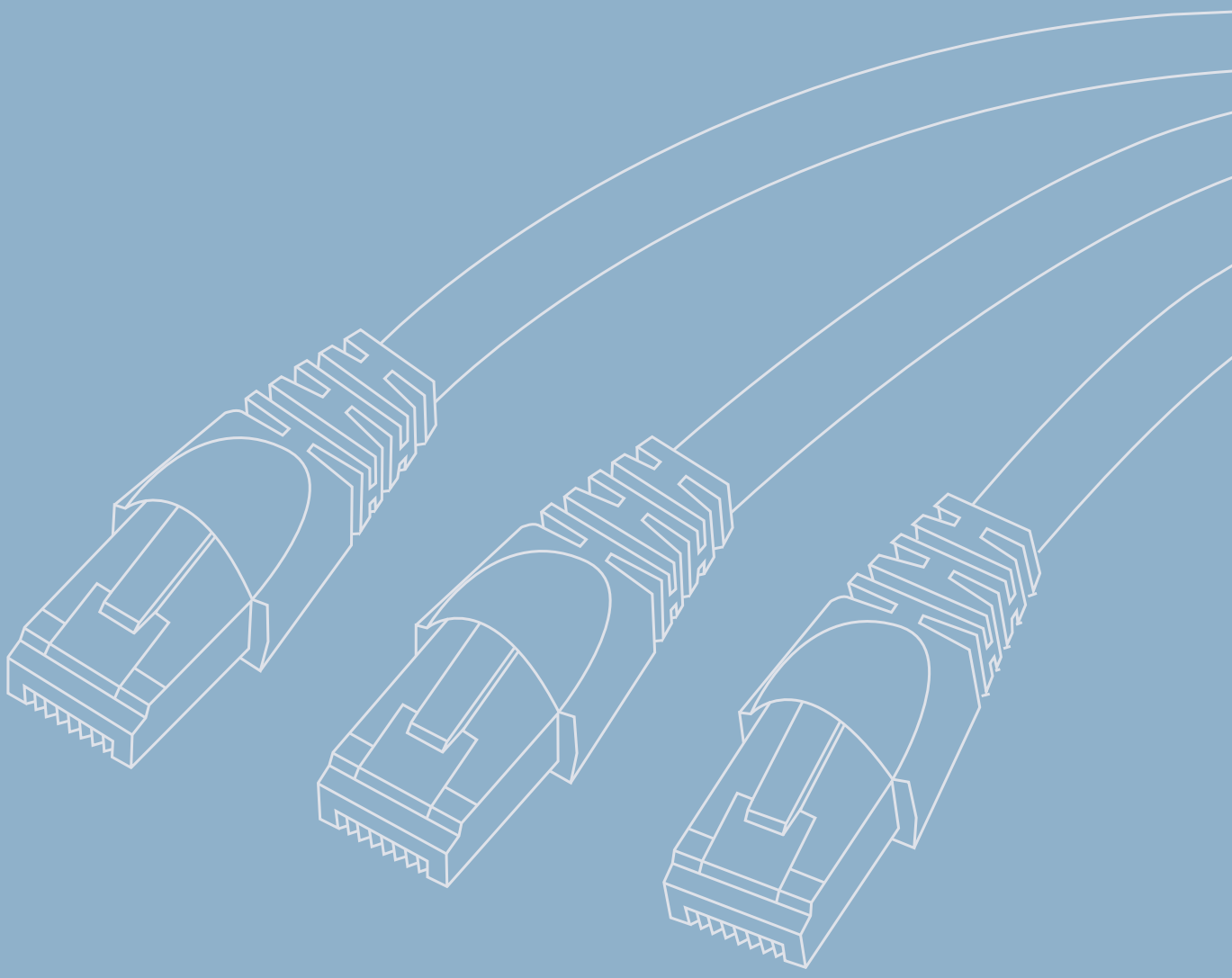

7 RJ45 Patch Cords

7.1 Industrial Patch Cords 187
7.1.1 Patch Cords S/FTP Cat.6_A 4x2xAWG 27/7 (PUR) - shielded 187
7.1.2 Patch Cords S/FTP Cat.6_A 4x2xAWG 27/7 (PVC) - shielded 188
7.1.3 Patch Cords SF/UTP Cat.5 4x2xAWG 26/7 (PUR) - shielded 188
7.1.4 Patch Cords SF/UTP Cat.5 4x2xAWG 26/7 (PVC) - shielded 189
7.1.5 Patch Cords SF/UTP Cat.5 2x2xAWG22/7 (PUR) MFP8-MFP8 - shielded 189
7.2 Cabinet Cords 190
7.2.1 Cat.6_A - Wiring 1:1 - S/FTP (LSZH) - shielded 190
7.2.2 Cat.6_A Mini Patch Cords - Wiring 1:1 - S/FTP (LSZH) - shielded 198
7.2.3 Cat.6_A - Measuring Cable Wiring 1:1 - S/FTP (LSZH) - shielded 198
7.2.4 Cat.6_A - Crossover - S/FTP (LSZH) - shielded 199
7.2.5 Cat.5 - Wiring 1:1 - F/UTP (LSZH) - shielded 199
7.3 Defined Disconnect CP-Link 202

Industrial Patch Cords 7.1

Performance Characteristics

- proven plug quality for durable, high-quality connections
- SF/UTP Cat.5 patch cords with PUR or PVC jacket available
- S/FTP Cat.6_A patch cords with PUR or PVC jacket available
- extended temperature range for use in harsh environment
- wide range of length from 1 m to 15 m
- shielded RJ45 Cat.6_A plugs acc. to IEC 60603-7-51
- the industrial wiring system is designed for meeting future requirements for 8-way terminating and supports Gigabit Ethernet with high power reserves.

	IE Patch Cords S/FTP Cat.6_A PVC	IE Patch Cords S/FTP Cat.6_A PUR	IE Patch Cords SF/UTP Cat.5 PVC	IE Patch Cords SF/UTP Cat.5 PUR
Mechanical Characteristics				
Durability (mating cycles)	≥ 750	≥ 750	≥ 750	≥ 750
Cable structure	LI02YSCY PVC 4x2xAWG 27/7 PiMF	LI02YSC11Y PUR 4x2xAWG 27/7 PiMF	LI2Y(ST)CY PVC 4x2xAWG 26/7	LI2Y(ST)C11Y PUR 4x2xAWG 26/7
Stranded wire	AWG 27 (7 x 0.14 mm)		AWG 26 (7 x 0.16 mm)	
Insulation	Foam PE, Ø 1.04 mm		PE, Ø 0.95 mm	
Pair shielding	Al-foil, outside conducting		-	-
Overall shielding	tin plated copper braid		aluminum foil, outer conductive and tinned copper braid	
Outer jacket	Ø 6.2 ±0.2 mm	Ø 6.2 ±0.2 mm	Ø 5.6 ±0.2 mm	Ø 5.8 ±0.2 mm
Colour	RAL 6018	RAL 6018	RAL 6018	RAL 6018
Climatic Characteristics				
UL	-	E344985	-	E344985
flame-retardant test	IEC 60332-1	IEC 60332-1	IEC 60332-1	IEC 60332-1
Operating temperature in °C	-40° C to +75° C	-40° C to +85° C	-40° C to +75° C	-40° C to +85° C

Patch Cord S/FTP Cat.6_A 4x2xAWG 27/7 (PUR) - shielded 7.1.1

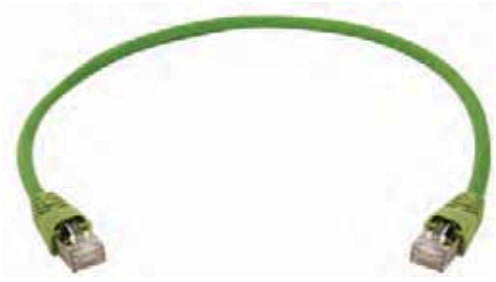

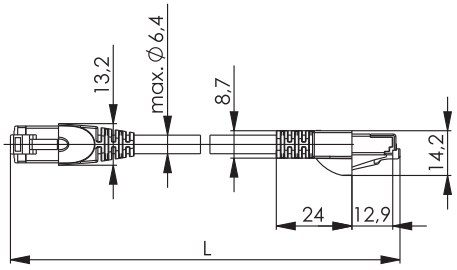

Order no.	Short name	Protection: 1st end - 2nd end	Length	Colour
L00000A0149	S/FTP Cat.6_A PUR	IP20 - IP20	1,0 m	green RAL 6018
L00001A0139	S/FTP Cat.6_A PUR	IP20 - IP20	2,0 m	green RAL 6018
L00002A0156	S/FTP Cat.6_A PUR	IP20 - IP20	3,0 m	green RAL 6018
L00003A0098	S/FTP Cat.6_A PUR	IP20 - IP20	5,0 m	green RAL 6018
L00004A0084	S/FTP Cat.6_A PUR	IP20 - IP20	7,5 m	green RAL 6018
L00005A0058	S/FTP Cat.6_A PUR	IP20 - IP20	10,0 m	green RAL 6018
L00006A0099	S/FTP Cat.6_A PUR	IP20 - IP20	15,0 m	green RAL 6018

7.1 Industrial Patch Cords

7.1.2 Patch Cord S/FTP Cat.6_A 4x2xAWG 27/7 (PVC) - shielded

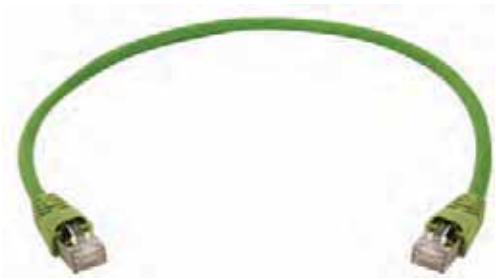

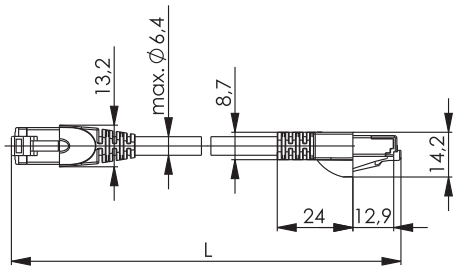

Order no.	Short name	Protection: 1st end - 2nd end	Length	Colour
L00000A0146	S/FTP Cat.6_A PVC	IP20 - IP20	1,0 m	green RAL 6018
L00001A0136	S/FTP Cat.6_A PVC	IP20 - IP20	2,0 m	green RAL 6018
L00002A0153	S/FTP Cat.6_A PVC	IP20 - IP20	3,0 m	green RAL 6018
L00003A0095	S/FTP Cat.6_A PVC	IP20 - IP20	5,0 m	green RAL 6018
L00004A0081	S/FTP Cat. 6_A PVC	IP20 - IP20	7,5 m	green RAL 6018
L00005A0055	S/FTP Cat. 6_A PVC	IP20 - IP20	10.0 m	green RAL 6018
L00006A0096	S/FTP Cat. 6_A PVC	IP20 - IP20	15,0 m	green RAL 6018

7.1.3 Patch Cord SF/UTP Cat.5 4x2xAWG 26/7 (PUR) - shielded

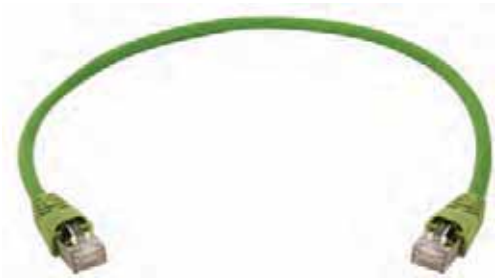

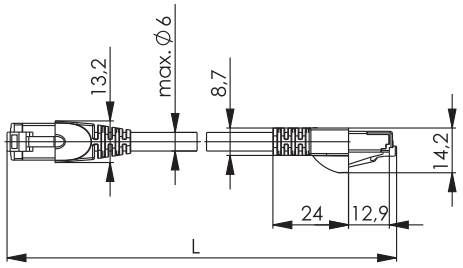

Order no.	Short name	Protection: 1st end - 2nd end	Length	Colour
L00000A0141	SF/UTP Cat.5	IP20 - IP20	1,0 m	green RAL 6018
L00001A0133	SF/UTP Cat.5	IP20 - IP20	2,0 m	green RAL 6018
L00002A0150	SF/UTP Cat.5	IP20 - IP20	3,0 m	green RAL 6018
L00003A0091	SF/UTP Cat.5	IP20 - IP20	5,0 m	green RAL 6018
L00004A0090	SF/UTP Cat.5	IP20 - IP20	7,5 m	green RAL 6018
L00005A0064	SF/UTP Cat.5	IP20 - IP20	10,0 m	green RAL 6018
L00006A0105	SF/UTP Cat.5	IP20 - IP20	15,0 m	green RAL 6018

Patch Cord SF/UTP Cat.5 4x2xAWG 26/7 (PVC) - shielded 7.1.4

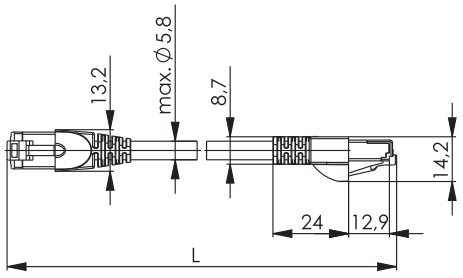

Order no.	Short name	Protection: 1st end - 2nd end	Length	Colour
L00000A0138	SF/UTP Cat.5 PVC	IP20 - IP20	1,0 m	green RAL 6018
L00001A0130	SF/UTP Cat.5 PVC	IP20 - IP20	2,0 m	green RAL 6018
L00002A0147	SF/UTP Cat.5 PVC	IP20 - IP20	3,0 m	green RAL 6018
L00003A0088	SF/UTP Cat.5 PVC	IP20 - IP20	5,0 m	green RAL 6018
L00004A0087	SF/UTP Cat.5 PVC	IP20 - IP20	7,5 m	green RAL 6018
L00005A0061	SF/UTP Cat.5 PVC	IP20 - IP20	10,0 m	green RAL 6018
L00006A0102	SF/UTP Cat.5 PVC	IP20 - IP20	15,0 m	green RAL 6018

Patch Cords SF/UTP Cat.5 2x2xAWG22/7 (PUR) MFP8-MFP8 - shielded 7.1.5

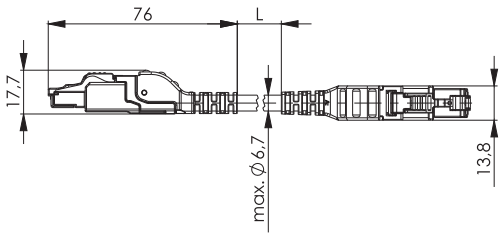

Order no.	Short name	Protection: 1st end - 2nd end	Length	Colour
L80400A0000	STX RJ45-RJ45 CC Profinet Cat.5	IP20 - IP20	1.0 m	green RAL 6018
L80401A0000	STX RJ45-RJ45 CC Profinet Cat.5	IP20 - IP20	2.0 m	green RAL 6018
L80402A0000	STX RJ45-RJ45 CC Profinet Cat.5	IP20 - IP20	3.0 m	green RAL 6018
L80403A0000	STX RJ45-RJ45 CC Profinet Cat.5	IP20 - IP20	5.0 m	green RAL 6018
L80404A0000	STX RJ45-RJ45 CC Profinet Cat.5	IP20 - IP20	7.5 m	green RAL 6018
L80405A0000	STX RJ45-RJ45 CC Profinet Cat.5	IP20 - IP20	10.0 m	green RAL 6018
L80406A0000	STX RJ45-RJ45 CC Profinet Cat.5	IP20 - IP20	15.0 m	green RAL 6018
L80406A0001	STX RJ45-RJ45 CC Profinet Cat.5	IP20 - IP20	20.0 m	green RAL 6018
L80406A0002	STX RJ45-RJ45 CC Profinet Cat.5	IP20 - IP20	25.0 m	green RAL 6018

7.2 Cabinet Cords

	Patch Cords shielded 500 MHz/Cat.6_A S/FTP LSZH	Mini Patch Cords shielded 500 MHz/Cat.6_A S/FTP LSZH	Patch Cords shielded 100 MHz/Cat.5e F/UTP LSZH
Standards			
Connectors	IEC 60603-7-51	IEC 60603-7-51	IEC 60603-7-3
Mechanical Characteristics			
Cable structure	Li02YSCH 4x2xAWG 27/7 PiMF	Li02YSCH 4x2xAWG 30/7 LSZH	Li2Y(ST)H 4x2xAWG 26/7
Stranded wire	AWG 27 (7/0.14 mm)	AWG 30 (7/0.1 mm)	AWG 26 (7/0.16mm)
Insulation	PE, Ø 1.02 mm (±0.05 mm)	PE, Ø 0.73 (±0.05 mm)	PE, Ø 0.92 mm (±0.05 mm)
Pair shielding	Al-foil, outside conducting	Al-laminated plastic foil	
Overall shielding	tin plated copper braid	tin plated copper braid	Al-foil, inside conducting
Outer jacket	5.8 mm (±0.2 mm)	4.9 mm (±0.3 mm)	5.5 (±0.2 mm)
Climatic Characteristics			
flame-retardant test	IEC 60332-1	IEC 60332-1	IEC 60332-1
UL	E244889	E244889	
Operating temperature in °C	-40°C to +75°C	-40°C to +75°C	-20° C to +60° C
Electrical Characteristics			
Current carrying capacity at 50°C	1 A	1 A	1 A
PoE+ acc to IEEE 802.3at	fulfilled	fulfilled	fulfilled
Transmission Characteristics			
10 Gigabit Ethernet acc. to IEEE 802.3an	fulfilled	fulfilled	-
Gigabit Ethernet acc. to IEEE 802.3	-	-	fulfilled

7.2.1 Cat.6_A - Wiring 1:1 - S/FTP (LSZH) - shielded

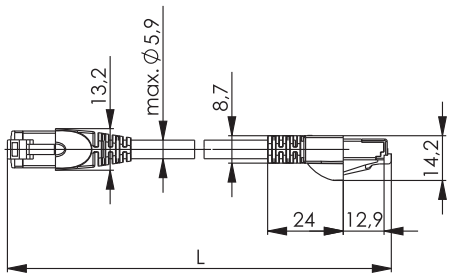

Order no.	Short name	Length	Colour
L00000A0230	MP8 FS 500 LSZH-0,25	0,25 m	grey
L00000A0072	MP8 FS 500 LSZH-0,5	0,5 m	grey
L00000A0081	MP8 FS 500 LSZH-1,0	1,0 m	grey
L00001A0090	MP8 FS 500 LSZH-1,5	1,5 m	grey
L00001A0084	MP8 FS 500 LSZH-2,0	2,0 m	grey
L00002A0112	MP8 FS 500 LSZH-3,0	3,0 m	grey
L00003A0055	MP8 FS 500 LSZH-5,0	5,0 m	grey
L00004A0054	MP8 FS 500 LSZH-7,5	7,5 m	grey
L00005A0027	MP8 FS 500 LSZH-10,0	10,0 m	grey
L00006A0033	MP8 FS 500 LSZH-15,0	15,0 m	grey
L00006A0036	MP8 FS 500 LSZH-20,0	20,0 m	grey
L00006A0034	MP8 FS 500 LSZH-25,0	25,0 m	grey
L00006A0035	MP8 FS 500 LSZH-50,0	50,0 m	grey

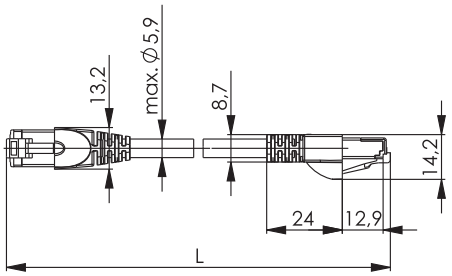

Order no.	Short name	Length	Colour
L00000A0231	MP8 FS 500 LSZH-0,25	0,25 m	green
L00000A0073	MP8 FS 500 LSZH-0,5	0,5 m	green
L00000A0082	MP8 FS 500 LSZH-1,0	1,0 m	green
L00001A0085	MP8 FS 500 LSZH-2,0	2,0 m	green
L00002A0113	MP8 FS 500 LSZH-3,0	3,0 m	green
L00003A0056	MP8 FS 500 LSZH-5,0	5,0 m	green
L00004A0055	MP8 FS 500 LSZH-7,5	7,5 m	green
L00005A0028	MP8 FS 500 LSZH-10,0	10,0 m	green
L00006A0037	MP8 FS 500 LSZH-15,0	15,0 m	green
L00006A0038	MP8 FS 500 LSZH-20,0	20,0 m	green
L00006A0039	MP8 FS 500 LSZH-25,0	25,0 m	green
L00006A0040	MP8 FS 500 LSZH-50,0	50,0 m	green

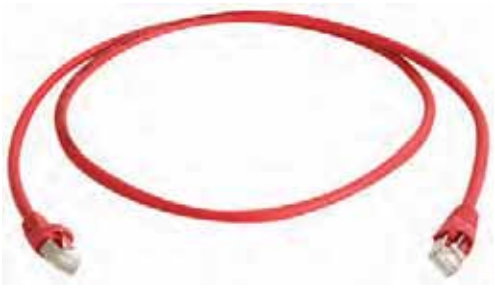

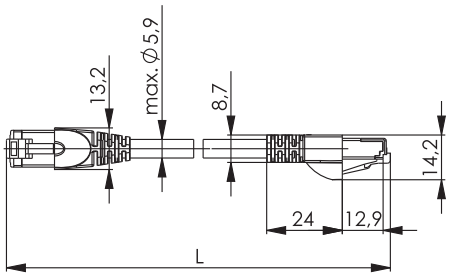

Order no.	Short name	Length	Colour
L00000A0232	MP8 FS 500 LSZH-0,25	0,25 m	red
L00000A0074	MP8 FS 500 LSZH-0,5	0,5 m	red
L00000A0083	MP8 FS 500 LSZH-1,0	1,0 m	red
L00001A0086	MP8 FS 500 LSZH-2,0	2,0 m	red
L00002A0114	MP8 FS 500 LSZH-3,0	3,0 m	red
L00003A0057	MP8 FS 500 LSZH-5,0	5,0 m	red
L00004A0056	MP8 FS 500 LSZH-7,5	7,5 m	red
L00005A0029	MP8 FS 500 LSZH-10,0	10,0 m	red
L00006A0041	MP8 FS 500 LSZH-15,0	15,0 m	red
L00006A0042	MP8 FS 500 LSZH-20,0	20,0 m	red
L00006A0043	MP8 FS 500 LSZH-25,0	25,0 m	red
L00006A0044	MP8 FS 500 LSZH-50,0	50,0 m	red

7.2 Cabinet Cords

7.2.1 Cat.6$_A$ - Wiring 1:1 - S/FTP (LSZH) - shielded

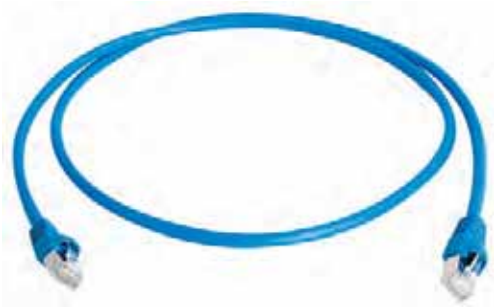

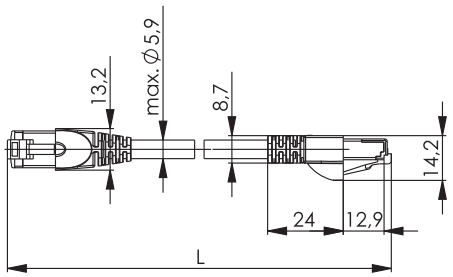

Order no.	Short name	Length	Colour
L00000A0233	MP8 FS 500 LSZH-0,25	0,25 m	blue
L00000A0075	MP8 FS 500 LSZH-0,5	0,5 m	blue
L00000A0084	MP8 FS 500 LSZH-1,0	1,0 m	blue
L00001A0087	MP8 FS 500 LSZH-2,0	2,0 m	blue
L00002A0115	MP8 FS 500 LSZH-3,0	3,0 m	blue
L00003A0058	MP8 FS 500 LSZH-5,0	5,0 m	blue
L00004A0057	MP8 FS 500 LSZH-7,5	7,5 m	blue
L00005A0030	MP8 FS 500 LSZH-10,0	10,0 m	blue
L00006A0045	MP8 FS 500 LSZH-15,0	15,0 m	blue
L00006A0046	MP8 FS 500 LSZH-20,0	20,0 m	blue
L00006A0047	MP8 FS 500 LSZH-25,0	25,0 m	blue
L00006A0048	MP8 FS 500 LSZH-50,0	50,0 m	blue

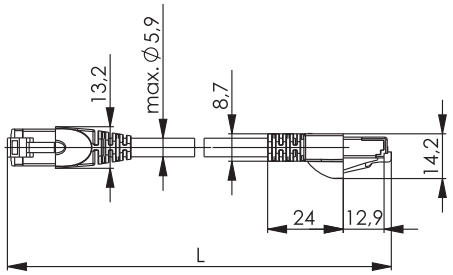

Order no.	Short name	Length	Colour
L00000A0234	MP8 FS 500 LSZH-0,25	0,25 m	yellow
L00000A0076	MP8 FS 500 LSZH-0,5	0,5 m	yellow
L00000A0085	MP8 FS 500 LSZH-1,0	1,0 m	yellow
L00001A0088	MP8 FS 500 LSZH-2,0	2,0 m	yellow
L00002A0116	MP8 FS 500 LSZH-3,0	3,0 m	yellow
L00003A0059	MP8 FS 500 LSZH-5,0	5,0 m	yellow
L00004A0058	MP8 FS 500 LSZH-7,5	7,5 m	yellow
L00005A0031	MP8 FS 500 LSZH-10,0	10,0 m	yellow
L00006A0049	MP8 FS 500 LSZH-15,0	15,0 m	yellow
L00006A0050	MP8 FS 500 LSZH-20,0	20,0 m	yellow
L00006A0051	MP8 FS 500 LSZH-25,0	25,0 m	yellow
L00006A0052	MP8 FS 500 LSZH-50,0	50,0 m	yellow

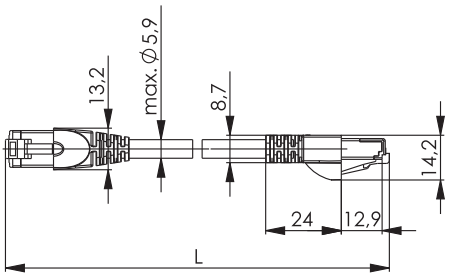

Order no.	Short name	Length	Colour
L00000A0235	MP8 FS 500 LSZH-0,25	0,25 m	black
L00000A0077	MP8 FS 500 LSZH-0,5	0,5 m	black
L00000A0086	MP8 FS 500 LSZH-1,0	1,0 m	black
L00001A0089	MP8 FS 500 LSZH-2,0	2,0 m	black
L00002A0117	MP8 FS 500 LSZH-3,0	3,0 m	black
L00003A0060	MP8 FS 500 LSZH-5,0	5,0 m	black
L00004A0060	MP8 FS 500 LSZH-7,5	7,5 m	black
L00005A0032	MP8 FS 500 LSZH-10,0	10,0 m	black
L00006A0053	MP8 FS 500 LSZH-15,0	15,0 m	black
L00006A0054	MP8 FS 500 LSZH-20,0	20,0 m	black
L00006A0055	MP8 FS 500 LSZH-25,0	25,0 m	black
L00006A0056	MP8 FS 500 LSZH-50,0	50,0 m	black

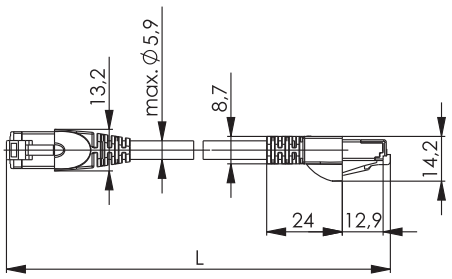

Order no.	Short name	Length	Colour
L00000A0236	MP8 FS 500 LSZH-0,25	0,25 m	white
L00000A0130	MP8 FS 500 LSZH-0,5	0,5 m	white
L00000A0131	MP8 FS 500 LSZH-1,0	1,0 m	white
L00001A0123	MP8 FS 500 LSZH-2,0	2,0 m	white
L00002A0141	MP8 FS 500 LSZH-3,0	3,0 m	white
L00003A0085	MP8 FS 500 LSZH-5,0	5,0 m	white
L00004A0071	MP8 FS 500 LSZH-7,5	7,5 m	white
L00005A0051	MP8 FS 500 LSZH-10,0	10,0 m	white

7.2 Cabinet Cords

7.2.1 Cat.6$_A$ - Wiring 1:1 - S/FTP (LSZH) - shielded

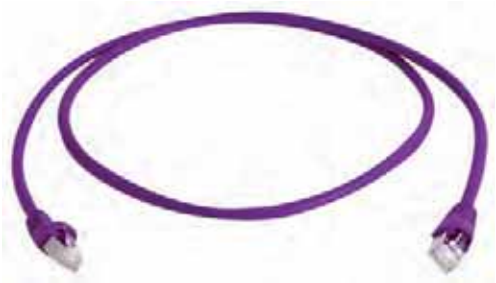

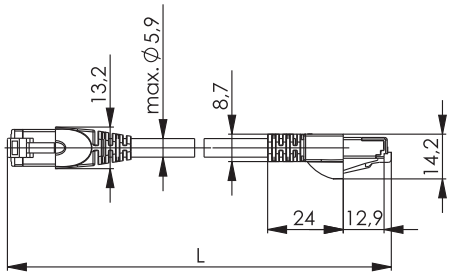

Order no.	Short name	Length	Colour
L00000A0237	MP8 FS 500 LSZH-0,25	0,25 m	purple
L00000A0238	MP8 FS 500 LSZH-0,5	0,5 m	purple
L00000A0226	MP8 FS 500 LSZH-1,0	1,0 m	purple
L00001A0194	MP8 FS 500 LSZH-2,0	2,0 m	purple
L00002A0195	MP8 FS 500 LSZH-3,0	3,0 m	purple
L00003A0147	MP8 FS 500 LSZH-5,0	5,0 m	purple
L00004A0134	MP8 FS 500 LSZH-7,5	7,5 m	purple
L00005A0103	MP8 FS 500 LSZH-10,0	10,0 m	purple

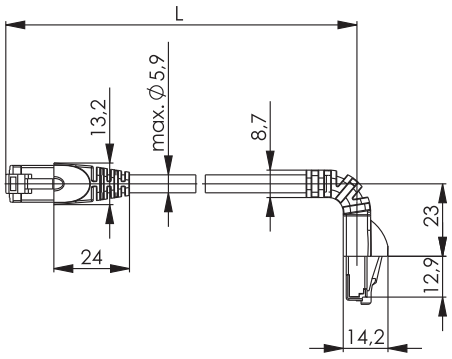

Order no.	Short name	Length	Colour	Remarks
L00000A0189	MP8 FS 500 LSZH-0,5	0,5 m	grey	1x90° - 1x180° cable boot
L00000A0192	MP8 FS 500 LSZH-1,0	1,0 m	grey	1x90° - 1x180° cable boot
L00001A0154	MP8 FS 500 LSZH-1,5	1,5 m	grey	1x90° - 1x180° cable boot
L00001A0155	MP8 FS 500 LSZH-2,0	2,0 m	grey	1x90° - 1x180° cable boot
L00002A0173	MP8 FS 500 LSZH-3,0	3,0 m	grey	1x90° - 1x180° cable boot
L00003A0119	MP8 FS 500 LSZH-5,0	5,0 m	grey	1x90° - 1x180° cable boot
L00004A0109	MP8 FS 500 LSZH-7,5	7,5 m	grey	1x90° - 1x180° cable boot
L00005A0080	MP8 FS 500 LSZH-10,0	10,0 m	grey	1x90° - 1x180° cable boot

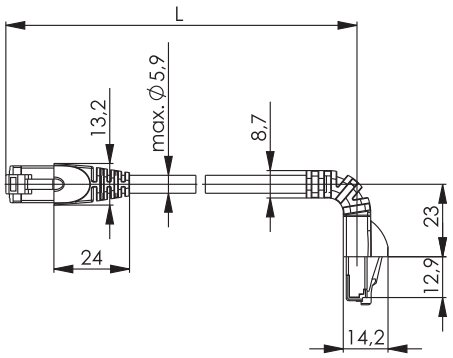

Order no.	Short name	Length	Colour	Remarks
L00000A0193	MP8 FS 500 LSZH-0,5	0,5 m	green	1x90° - 1x180° cable boot
L00000A0194	MP8 FS 500 LSZH-1,0	1,0 m	green	1x90° - 1x180° cable boot
L00001A0156	MP8 FS 500 LSZH-2,0	2,0 m	green	1x90° - 1x180° cable boot
L00002A0174	MP8 FS 500 LSZH-3,0	3,0 m	green	1x90° - 1x180° cable boot
L00003A0121	MP8 FS 500 LSZH-5,0	5,0 m	green	1x90° - 1x180° cable boot
L00004A0111	MP8 FS 500 LSZH-7,5	7,5 m	green	1x90° - 1x180° cable boot
L00005A0081	MP8 FS 500 LSZH-10,0	10,0 m	green	1x90° - 1x180° cable boot

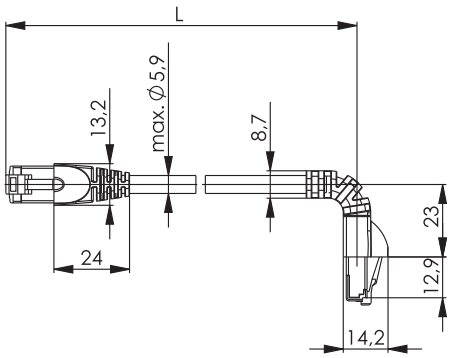

Order no.	Short name	Length	Colour	Remarks
L00000A0195	MP8 FS 500 LSZH-0,5	0,5 m	red	1x90° - 1x180° cable boot
L00000A0196	MP8 FS 500 LSZH-1,0	1,0 m	red	1x90° - 1x180° cable boot
L00001A0157	MP8 FS 500 LSZH-2,0	2,0 m	red	1x90° - 1x180° cable boot
L00002A0176	MP8 FS 500 LSZH-3,0	3,0 m	red	1x90° - 1x180° cable boot
L00003A0123	MP8 FS 500 LSZH-5,0	5,0 m	red	1x90° - 1x180° cable boot
L00004A0112	MP8 FS 500 LSZH-7,5	7,5 m	red	1x90° - 1x180° cable boot
L00005A0082	MP8 FS 500 LSZH-10,0	10,0 m	red	1x90° - 1x180° cable boot

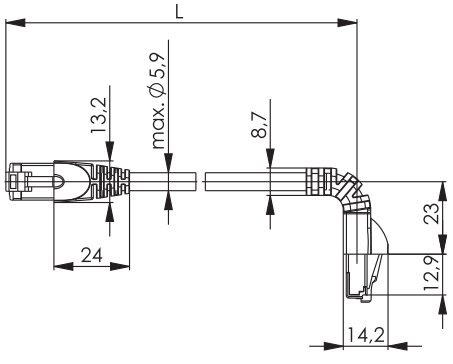

Order no.	Short name	Length	Colour	Remarks
L00000A0197	MP8 FS 500 LSZH-0,5	0,5 m	blue	1x90° - 1x180° cable boot
L00000A0198	MP8 FS 500 LSZH-1,0	1,0 m	blue	1x90° - 1x180° cable boot
L00001A0159	MP8 FS 500 LSZH-2,0	2,0 m	blue	1x90° - 1x180° cable boot
L00002A0177	MP8 FS 500 LSZH-3,0	3,0 m	blue	1x90° - 1x180° cable boot
L00003A0124	MP8 FS 500 LSZH-5,0	5,0 m	blue	1x90° - 1x180° cable boot
L00004A0113	MP8 FS 500 LSZH-7,5	7,5 m	blue	1x90° - 1x180° cable boot
L00005A0083	MP8 FS 500 LSZH-10,0	10,0 m	blue	1x90° - 1x180° cable boot

7.2 Cabinet Cords

7.2.1 Cat.6_A - Wiring 1:1 - S/FTP (LSZH) - shielded

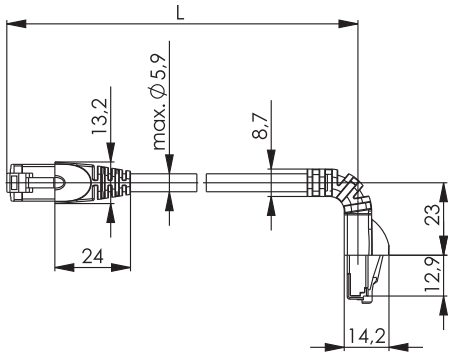

Order no.	Short name	Length	Colour	Remarks
L00000A0199	MP8 FS 500 LSZH-0,5	0,5 m	yellow	1x90° - 1x180° cable boot
L00000A0200	MP8 FS 500 LSZH-1,0	1,0 m	yellow	1x90° - 1x180° cable boot
L00001A0162	MP8 FS 500 LSZH-2,0	2,0 m	yellow	1x90° - 1x180° cable boot
L00002A0179	MP8 FS 500 LSZH-3,0	3,0 m	yellow	1x90° - 1x180° cable boot
L00003A0125	MP8 FS 500 LSZH-5,0	5,0 m	yellow	1x90° - 1x180° cable boot
L00004A0114	MP8 FS 500 LSZH-7,5	7,5 m	yellow	1x90° - 1x180° cable boot
L00005A0084	MP8 FS 500 LSZH-10,0	10,0 m	yellow	1x90° - 1x180° cable boot

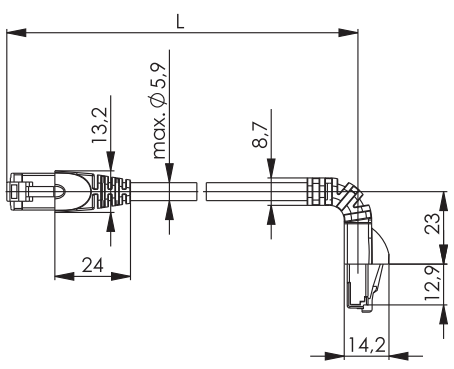

Order no.	Short name	Length	Colour	Remarks
L00000A0201	MP8 FS 500 LSZH-0,5	0,5 m	black	1x90° - 1x180° cable boot
L00000A0202	MP8 FS 500 LSZH-1,0	1,0 m	black	1x90° - 1x180° cable boot
L00001A0163	MP8 FS 500 LSZH-2,0	2,0 m	black	1x90° - 1x180° cable boot
L00002A0175	MP8 FS 500 LSZH-3,0	3,0 m	black	1x90° - 1x180° cable boot
L00003A0126	MP8 FS 500 LSZH-5,0	5,0 m	black	1x90° - 1x180° cable boot
L00004A0115	MP8 FS 500 LSZH-7,5	7,5 m	black	1x90° - 1x180° cable boot
L00005A0085	MP8 FS 500 LSZH-10,0	10,0 m	black	1x90° - 1x180° cable boot

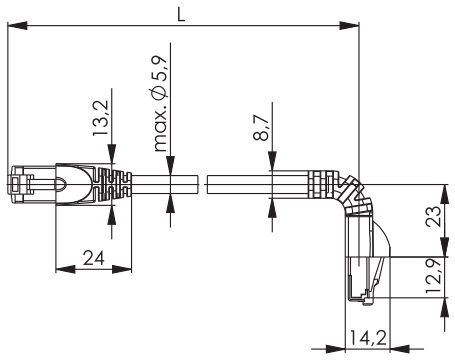

Order no.	Short name	Length	Colour	Remarks
L00000A0203	MP8 FS 500 LSZH-0,5	0,5 m	white	1x90° - 1x180° cable boot
L00000A0204	MP8 FS 500 LSZH-1,0	1,0 m	white	1x90° - 1x180° cable boot
L00001A0164	MP8 FS 500 LSZH-2,0	2,0 m	white	1x90° - 1x180° cable boot
L00002A0180	MP8 FS 500 LSZH-3,0	3,0 m	white	1x90° - 1x180° cable boot
L00003A0127	MP8 FS 500 LSZH-5,0	5,0 m	white	1x90° - 1x180° cable boot
L00004A0116	MP8 FS 500 LSZH-7,5	7,5 m	white	1x90° - 1x180° cable boot
L00005A0086	MP8 FS 500 LSZH-10,0	10,0 m	white	1x90° - 1x180° cable boot

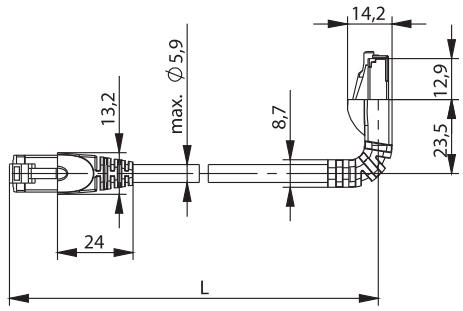

Order no.	Short name	Length	Colour	Remarks
L00000A0253	MP8 FS 500 LSZH-0,5	0,5 m	grey	1x270° - 1x180° boot
L00000A0254	MP8 FS 500 LSZH-1,0	1,0 m	grey	1x270° - 1x180° boot
L00001A0199	MP8 FS 500 LSZH-2,0	2,0 m	grey	1x270° - 1x180° boot
L00002A0203	MP8 FS 500 LSZH-3,0	3,0 m	grey	1x270° - 1x180° boot
L00003A0157	MP8 FS 500 LSZH-5,0	5,0 m	grey	1x270° - 1x180° boot
L00004A0145	MP8 FS 500 LSZH-7,5	7,5 m	grey	1x270° - 1x180° boot
L00005A0113	MP8 FS 500 LSZH-10,0	10,0 m	grey	1x270° - 1x180° boot

7.2 Cabinet Cords

7.2.2 Cat.6$_A$ Mini Patch Cords - Wiring 1:1 - S/FTP (LSZH) - shielded

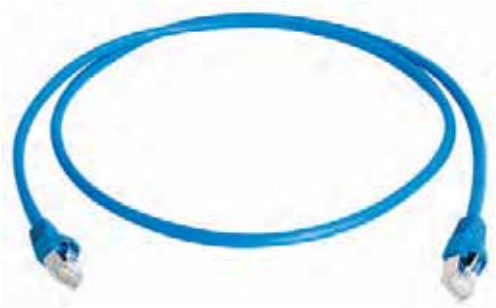

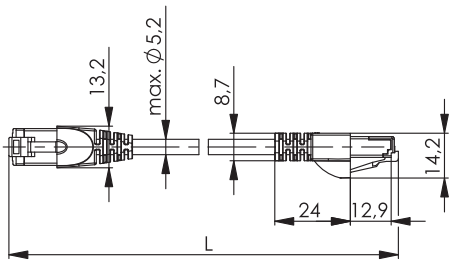

Order no.	Short name	Length	Colour
L00000A0376	Mini Patch Cord MP8 FS 500 LSZH-0,5	0.5 m	blue
L00000A0377	Mini Patch Cord MP8 FS 500 LSZH-1,0	1.0 m	blue
L00001A0288	Mini Patch Cord MP8 FS 500 LSZH-1,5	1.5 m	blue
L00001A0289	Mini Patch Cord MP8 FS 500 LSZH-2,0	2.0 m	blue
L00002A0282	Mini Patch Cord MP8 FS 500 LSZH-2,5	2.5 m	blue
L00002A0283	Mini Patch Cord MP8 FS 500 LSZH-3,0	3.0 m	blue
L00003A0250	Mini Patch Cord MP8 FS 500 LSZH-5,0	5.0 m	blue
L00004A0225	Mini Patch Cord MP8 FS 500 LSZH-7,5	7.5 m	blue
L00005A0176	Mini Patch Cord MP8 FS 500 LSZH-10,0	10.0 m	blue

7.2.3 Cat.6$_A$ - Measuring Cable Wiring 1:1 - S/FTP (LSZH) - shielded

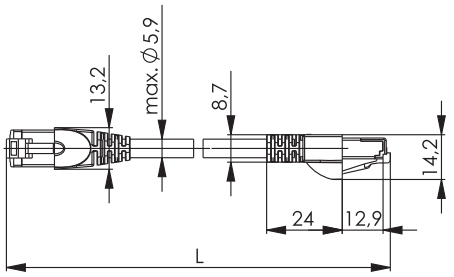

Order no.	Short name	Remarks	Length	Colour
L00003A0049	MP8 FS 500 LSZH-5,0	Telegärtner test cable for channel adaptor Class E_A	5,0 m	blue

Cat.6$_A$ - Crossover - S/FTP (LSZH) - shielded 7.2.4

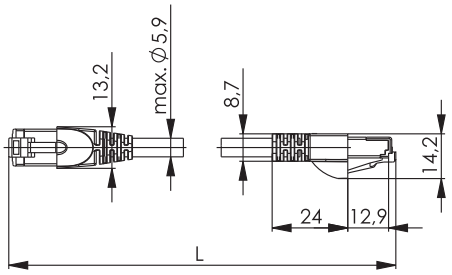

Order no.	Short name	Length	Cable boot colour	Colour
L00000A0102	MP8 FS 500 LSZH Crossover 10/100/1000 BT-0,5	0,5 m	yellow	grey
L00000A0103	MP8 FS 500 LSZH Crossover 10/100/1000 BT-1,0	1,0 m	yellow	grey
L00001A0099	MP8 FS 500 LSZH Crossover 10/100/1000 BT-2,0	2,0 m	yellow	grey
L00002A0120	MP8 FS 500 LSZH Crossover 10/100/1000 BT-3,0	3,0 m	yellow	grey
L00003A0067	MP8 FS 500 LSZH Crossover 10/100/1000 BT-5,0	5,0 m	yellow	grey
L00004A0064	MP8 FS 500 LSZH Crossover 10/100/1000 BT-7,5	7,5 m	yellow	grey
L00005A0035	MP8 FS 500 LSZH Crossover 10/100/1000 BT-10,0	10,0 m	yellow	grey

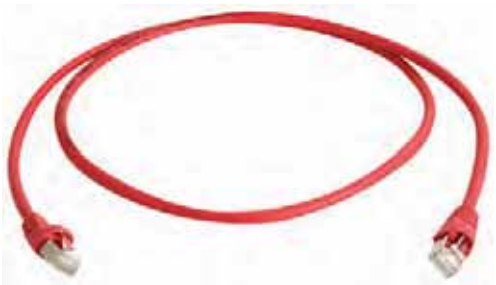

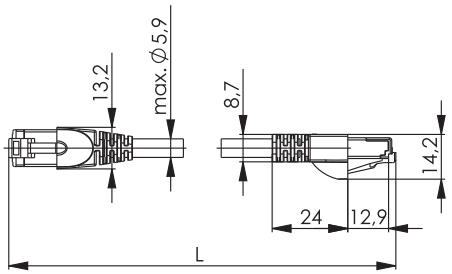

Order no.	Short name	Length	Colour
L00000A0118	MP8 FS 500 LSZH Crossover 10/100/1000 BT-0,5	0,5 m	red
L00000A0120	MP8 FS 500 LSZH Crossover 10/100/1000 BT-1,0	1,0 m	red
L00001A0117	MP8 FS 500 LSZH Crossover 10/100/1000 BT-2,0	2,0 m	red
L00002A0139	MP8 FS 500 LSZH Crossover 10/100/1000 BT-3,0	3,0 m	red
L00003A0078	MP8 FS 500 LSZH Crossover 10/100/1000 BT-5,0	5,0 m	red
L00005A0104	MP8 FS 500 LSZH Crossover 10/100/1000 BT-10,0	10,0 m	red

Cat.5e - Wiring 1:1 - F/UTP (LSZH) - shielded 7.2.5

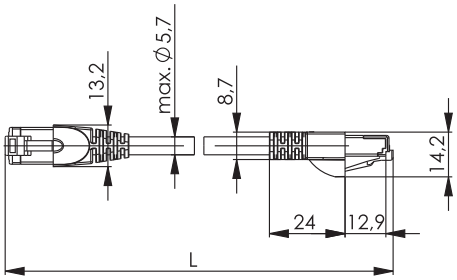

Order no.	Short name	Length	Colour
L00000D0017	MP8 FS 100 LSZH-0,25	0,25 m	grey
L00000D0035	MP8 FS 100 LSZH-0,5	0,5 m	grey
L00000D0026	MP8 FS 100 LSZH-1,0	1,0 m	grey
L00001D0036	MP8 FS 100 LSZH-2,0	2,0 m	grey
L00002D0080	MP8 FS 100 LSZH-3,0	3,0 m	grey
L00003D0030	MP8 FS 100 LSZH-5,0	5,0 m	grey
L00004D0041	MP8 FS 100 LSZH-7,5	7,5 m	grey
L00005D0035	MP8 FS 100 LSZH-10,0	10,0 m	grey
L00006D0078	MP8 FS 100 LSZH-15,0	15,0 m	grey
L00006D0079	MP8 FS 100 LSZH-20,0	20,0 m	grey
L00006D0080	MP8 FS 100 LSZH-25,0	25,0 m	grey
L00006D0081	MP8 FS 100 LSZH-50,0	50,0 m	grey

7.2 Cabinet Cords

7.2.5 Cat.5e - Wiring 1:1 - F/UTP (LSZH) - shielded

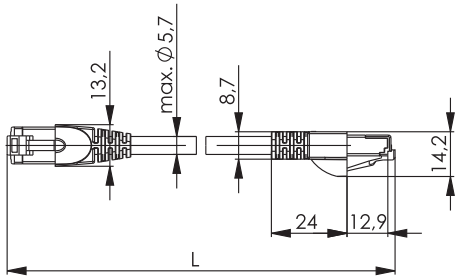

Order no.	Short name	Length	Colour
L00000D0034	MP8 FS 100 LSZH-0,5	0,5 m	green
L00000D0025	MP8 FS 100 LSZH-1,0	1,0 m	green
L00001D0035	MP8 FS 100 LSZH-2,0	2,0 m	green
L00002D0079	MP8 FS 100 LSZH-3,0	3,0 m	green
L00003D0029	MP8 FS 100 LSZH-5,0	5,0 m	green
L00004D0040	MP8 FS 100 LSZH-7,5	7,5 m	green
L00005D0036	MP8 FS 100 LSZH-10,0	10,0 m	green
L00006D0082	MP8 FS 100 LSZH-15,0	15,0 m	green
L00006D0083	MP8 FS 100 LSZH-20,0	20,0 m	green
L00006D0084	MP8 FS 100 LSZH-25,0	25,0 m	green
L00006D0085	MP8 FS 100 LSZH-50,0	50,0 m	green

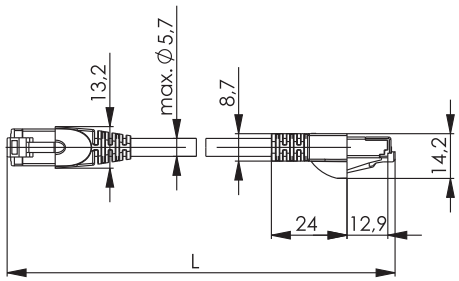

Order no.	Short name	Length	Colour
L00000D0031	MP8 FS 100 LSZH-0,5	0,5 m	red
L00000D0022	MP8 FS 100 LSZH-1,0	1,0 m	red
L00001D0032	MP8 FS 100 LSZH-2,0	2,0 m	red
L00002D0076	MP8 FS 100 LSZH-3,0	3,0 m	red
L00003D0026	MP8 FS 100 LSZH-5,0	5,0 m	red
L00004D0037	MP8 FS 100 LSZH-7,5	7,5 m	red
L00005D0037	MP8 FS 100 LSZH-10,0	10,0 m	red
L00006D0086	MP8 FS 100 LSZH-15,0	15,0 m	red
L00006D0087	MP8 FS 100 LSZH-20,0	20,0 m	red
L00006D0088	MP8 FS 100 LSZH-25,0	25,0 m	red
L00006D0089	MP8 FS 100 LSZH-50,0	50,0 m	red

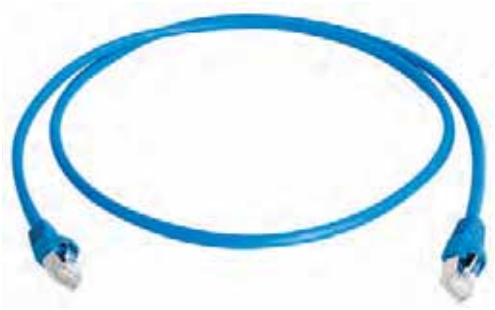

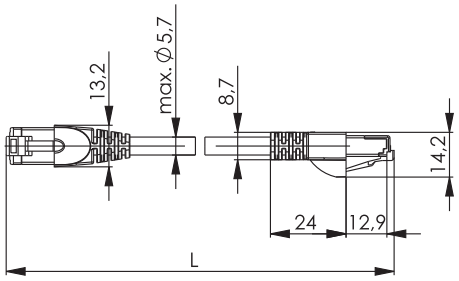

Order no.	Short name	Length	Colour
L00000D0032	MP8 FS 100 LSZH-0,5	0,5 m	blue
L00000D0023	MP8 FS 100 LSZH-1,0	1,0 m	blue
L00001D0033	MP8 FS 100 LSZH-2,0	2,0 m	blue
L00002D0077	MP8 FS 100 LSZH-3,0	3,0 m	blue
L00003D0027	MP8 FS 100 LSZH-5,0	5,0 m	blue
L00004D0038	MP8 FS 100 LSZH-7,5	7,5 m	blue
L00005D0038	MP8 FS 100 LSZH-10,0	10,0 m	blue
L00006D0090	MP8 FS 100 LSZH-15,0	15,0 m	blue
L00006D0091	MP8 FS 100 LSZH-20,0	20,0 m	blue
L00006D0092	MP8 FS 100 LSZH-25,0	25,0 m	blue
L00006D0093	MP8 FS 100 LSZH-50,0	50,0 m	blue

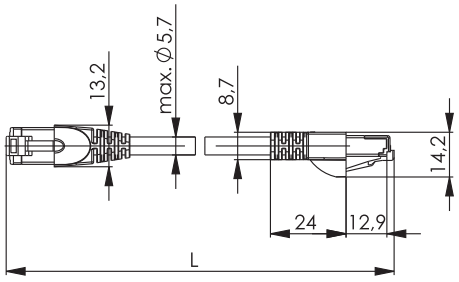

Order no.	Short name	Length	Colour
L00000D0033	MP8 FS 100 LSZH-0,5	0,5 m	yellow
L00000D0024	MP8 FS 100 LSZH-1,0	1,0 m	yellow
L00001D0034	MP8 FS 100 LSZH-2,0	2,0 m	yellow
L00002D0078	MP8 FS 100 LSZH-3,0	3,0 m	yellow
L00003D0028	MP8 FS 100 LSZH-5,0	5,0 m	yellow
L00004D0039	MP8 FS 100 LSZH-7,5	7,5 m	yellow
L00005D0039	MP8 FS 100 LSZH-10,0	10,0 m	yellow
L00006D0094	MP8 FS 100 LSZH-15,0	15,0 m	yellow
L00006D0095	MP8 FS 100 LSZH-20,0	20,0 m	yellow
L00006D0096	MP8 FS 100 LSZH-25,0	25,0 m	yellow
L00006D0097	MP8 FS 100 LSZH-50,0	50,0 m	yellow

7.2 Cabinet Cords

7.2.5 Cat.5e - Wiring 1:1 - F/UTP (LSZH) - shielded

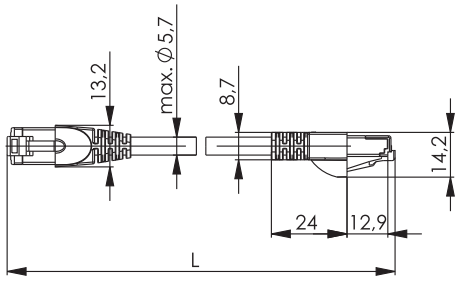

Order no.	Short name	Length	Colour
L00000D0089	MP8 FS 100 LSZH-0,5	0,5 m	black
L00000D0090	MP8 FS 100 LSZH-1,0	1,0 m	black
L00001D0095	MP8 FS 100 LSZH-2,0	2,0 m	black
L00002D0123	MP8 FS 100 LSZH-3,0	3,0 m	black
L00003D0062	MP8 FS 100 LSZH-5,0	5,0 m	black
L00004D0062	MP8 FS 100 LSZH-7,5	7,5 m	black
L00005D0040	MP8 FS 100 LSZH-10,0	10,0 m	black
L00006D0098	MP8 FS 100 LSZH-15,0	15,0 m	black
L00006D0099	MP8 FS 100 LSZH-20,0	20,0 m	black
L00006D0100	MP8 FS 100 LSZH-25,0	25,0 m	black
L00006D0101	MP8 FS 100 LSZH-50,0	50,0 m	black

7.3 Defined Disconnect CP-Link

The DDCP-Link offers users and network administrators an easy way to protect expensive and mobile IT equipment with LAN access from damage. If the mobile IT equipment is moved in a bigger radius than the connected RJ45 cable allows, the DDCP-Link disconnects the connection when a certain pull-out force is reached. This prevents damage of the expensive boards of the IT equipment such as damaged contacts or complete loss of RJ45 jacks for the network connection. Therefore, an expensive repair is a thing of the past. The connection between RJ45 trunk and DDCP-Link disconnects first because the pull-out force is designed to be lower than the standardized specification for RJ45 plugs and jacks according to IEC 60603-7. Nevertheless the DDCP offers enough insertion and pull-out force to prevent an accidental release of the connection under small pull-out forces. The DDCP can be integrated into existing structures with little effort, for example, if it is connected between telecommunication outlets, connection cable and in front of active devices.

Performance Characteristics

- Plug & Jack: IEC 60603-7-51 compliant
- Life: ≥ 750 mating cycles
- Connection diagram 1:1; pin assignment T568B
- Protected release latch by means of moulded RJ45 boot
- Contact finish material: Ni1.2Au0.8
- Shielding housing material of jack: zinc diecast nickel plated
- Outer diameter of cable: 5.8 mm (+/- 0.2 mm)
- Temperature range: -40° C to +70° C
- High Power over Ethernet plus (PoE+) acc. to IEEE 802.3at
- Housing cover material: ABS blue
- Cable: S/FTP 4x2xAWG27/7 Cat.7 LSZH

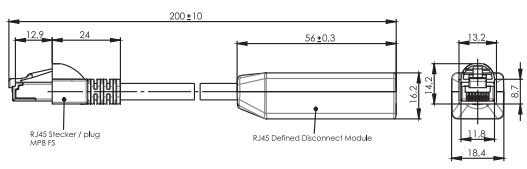

Order no.	Short name	Colour
L00000A0274	Defined Disconnect CP-Link	blue

8

FO Patch Cords

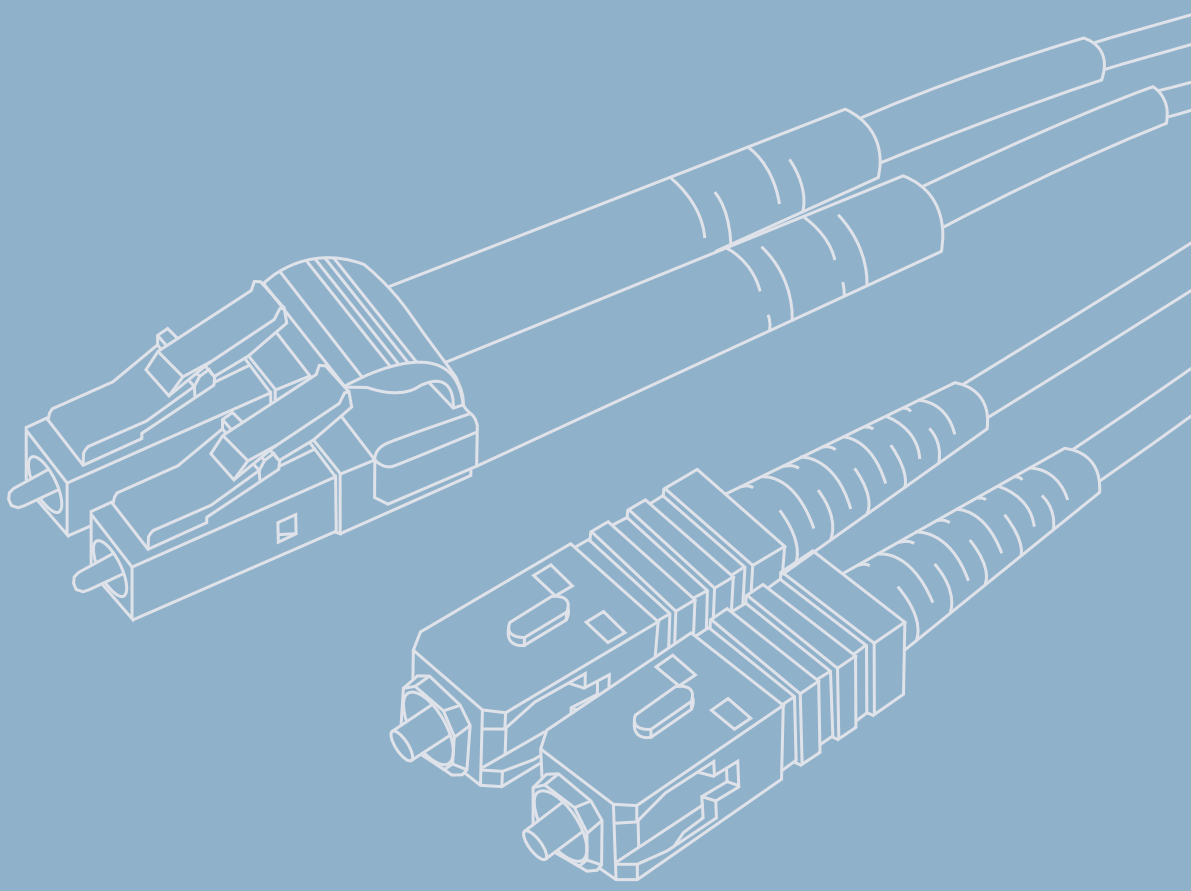

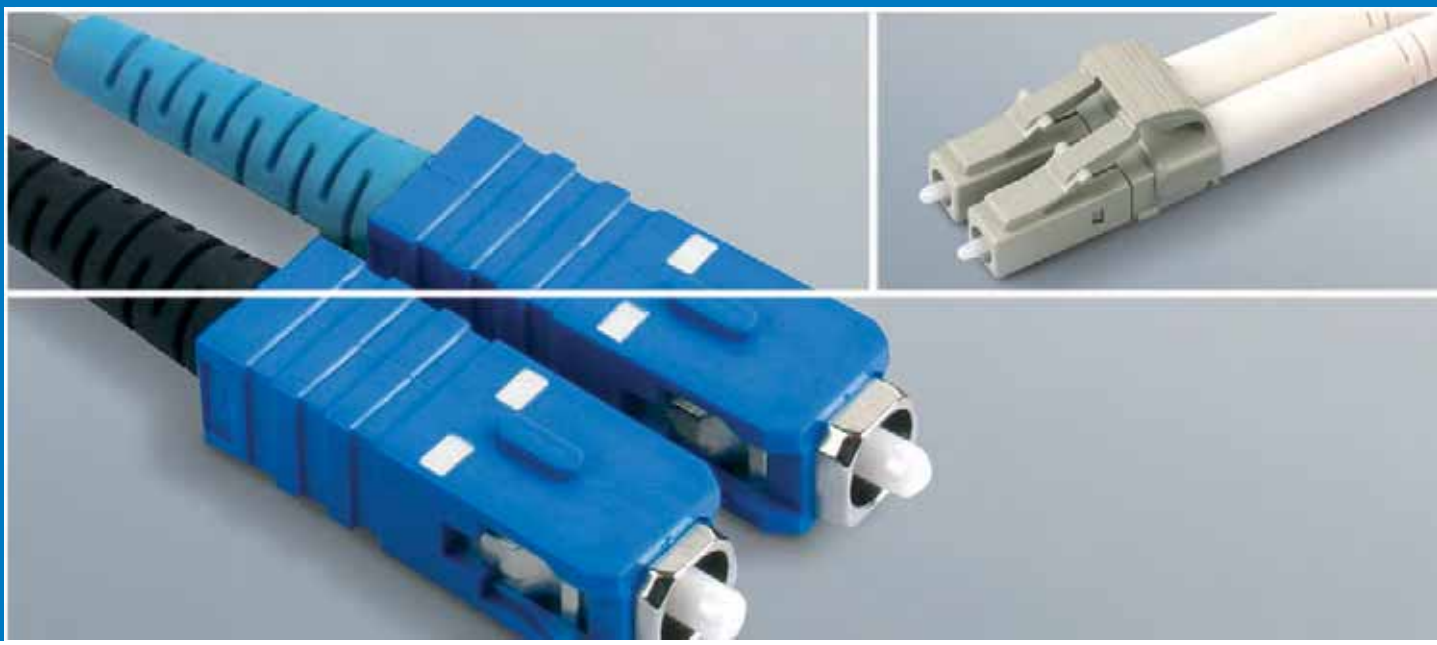

8 FO Patch Cords

8.1 FO Duplex Patch Cords 205
8.1.1 Connector Type: LC Duplex 206
8.1.2 Connector Type: SC Duplex 207
8.1.3 Connector Type: SC 208
8.1.4 Connector Type: ST 209
8.1.5 Connector Type: E2000 210

8.2 FO Duplex Adaptor Cords 210
8.2.1 Connector Types: 1st end 2xSC Duplex, 2nd end 2xLC Duplex 210
8.2.2 Connector Types: 1st end 2xST, 2nd end SC Duplex 211
8.2.3 Connector Types: 1st end 2xST, 2nd end LC Duplex 212

8.3 Accessories 213

Of all components in a channel, patch cords have to endure highest stress and wear. This is why many users rely on patch cords made by Telegärtner: Perfectly matched components, highest quality standards and completely tracked manufacturing processes make sure the data network works safely and reliably.

Performance Characteristics

- Available for Singlemode and Multimode
- Standard lenghts of 1 m, 2 m, 3 m, 5 m and 10 m
- Customer specific lengths avaliable using the TICNET configurator at www.telegaertner.com/ticnet

FO Duplex Patch Cords 8.1

Acc. to ISO/IEC 11801 the fiber channels of duplex connectors are connected, i.e. channel termination A on the 1st side is connected to channel termination B on 2nd side. The channels A/B are marked by differently coloured cable boots (A=red, B=black).

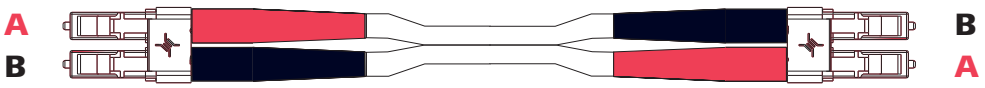

acc. to ISO/IEC 11801

	Duplex cable Zipcord OS2 G.657.A1	Duplex cable Zipcord OM2	Duplex cable Zipcord OM3	Duplex cable Zipcord OM4	Duplex cable Zipcord OM1
Mechanical Characteristics					
Calbe structure acc. DIN/VDE 0888	I-K(ZN)H 2x1 …	I-K(ZN)H 2x1 …	I-K(ZN)H 2x1 …	I-K(ZN)H 2x1 …	I-K(ZN)H 2x1 …
Cable dimensions in mm: Zipcord	2.8 x 5.7	2.8 x 5.7	2.8 x 5.7	2.8 x 5.7	2.8 x 5.7
Cable dimensions in mm: Minizip	1.8 x 3.7	1.8 x 3.7	1.8 x 3.7	1.8 x 3.7	1.8 x 3.7
Max. pulling tension short-term/long-term in N: Zipcord	400 / 200	400 / 200	400 / 200	400 / 200	400 / 200
Max. pulling tension short-term/long-term in N: Minizip	240 / 140	240 / 140	240 / 140	240 / 140	240 / 140
Max. crush resistance long-torm in N/m: Zipcord	5000	5000	5000	5000	5000
Max. crush resistance long-torm in N/m: Minizip	2000	2000	2000	2000	2000
Min. bending radius in mm	15	25	25	25	25
Colour of outer jacket	yellow	orange	aqua	violet	orange
Weight in kg/km: Zipcord	14.5	14.5	14.5	14.5	14.5
Weight in kg/km: Minizip	7.4	7.4	7.4	7.4	7.4
Climatic Characteristics					
Operating temperature in °C	-5 / +55	-5 / +55	-5 / +55	-5 / +55	-5 / +55
Storage temperature in °C	-30 / +70	-30 / +70	-30 / +70	-30 / +70	-30 / +70
Installation temperature in °C	-5 / +50	-5 / +50	-5 / +50	-5 / +50	-5 / +50
Flame retardancy	IEC 60332-1	IEC 60332-1	IEC 60332-1	IEC 60332-1	IEC 60332-1
Halogen-free acc. to	IEC 60754-2	IEC 60754-2	IEC 60754-2	IEC 60754-2	IEC 60754-2
Technical Characteristics					
Application	Patch cords	Patch cords	Patch cords	Patch cords	Patch cords
Optical Characteristics					
Insertion loss	Singlemode: max. 0.4 dB[1]; Multimode: max. 0.3 dB[1]				
Return loss	Singlemode: min. 40 dB[2] (APC: min. 60 dB[2]); Multimode: min. 30 dB[2]				
Life	≥ 1000				

1) Measurement procedure acc. to IEC 61300-3-4
2) Measurement procedure acc. to IEC 61300-3-6

8.1 FO Duplex Patch Cords

8.1.1 Connector Type: LC Duplex

Order no.	Fiber type	Connector type	Length	Housing Colour	Cable Colour
L00870A0002	E9/125 OS2	LC Duplex	1,0 m	blue	yellow
L00871A0003	E9/125 OS2	LC Duplex	2,0 m	blue	yellow
L00872A0002	E9/125 OS2	LC Duplex	3,0 m	blue	yellow
L00873A0002	E9/125 OS2	LC Duplex	5,0 m	blue	yellow
L00875A0002	E9/125 OS2	LC Duplex	10,0 m	blue	yellow

Other lengths and types : www.telegaertner.com/ticnet

Order no.	Fiber type	Connector type	Length	Housing Colour	Cable Colour
L00870A0000	G50/125 OM2	LC Duplex	1,0 m	beige	orange
L00871A0004	G50/125 OM2	LC Duplex	2,0 m	beige	orange
L00872A0000	G50/125 OM2	LC Duplex	3,0 m	beige	orange
L00873A0000	G50/125 OM2	LC Duplex	5,0 m	beige	orange
L00875A0000	G50/125 OM2	LC Duplex	10,0 m	beige	orange

Other lengths and types : www.telegaertner.com/ticnet

Order no.	Fiber type	Connector type	Length	Housing Colour	Cable Colour
L00870A0003	G50/125 OM3	LC Duplex	1,0 m	aqua	aqua
L00871A0006	G50/125 OM3	LC Duplex	2,0 m	aqua	aqua
L00872A0003	G50/125 OM3	LC Duplex	3,0 m	aqua	aqua
L00873A0003	G50/125 OM3	LC Duplex	5,0 m	aqua	aqua
L00875A0003	G50/125 OM3	LC Duplex	10,0 m	aqua	aqua

Other lengths and types : www.telegaertner.com/ticnet

Order no.	Fiber type	Connector type	Length	Housing Colour	Cable Colour
L00870A0005	G50/125 OM4	LC Duplex	1,0 m	black	violet
L00871A0008	G50/125 OM4	LC Duplex	2,0 m	black	violet
L00872A0006	G50/125 OM4	LC Duplex	3,0 m	black	violet
L00873A0009	G50/125 OM4	LC Duplex	5,0 m	black	violet
L00875A0007	G50/125 OM4	LC Duplex	10,0 m	black	violet

Order no.	Fiber type	Connector type	Length	Housing Colour	Cable Colour
L00870A0001	G62,5/125 OM1	LC Duplex	1,0 m	beige	orange
L00871A0005	G62,5/125 OM1	LC Duplex	2,0 m	beige	orange
L00872A0001	G62,5/125 OM1	LC Duplex	3,0 m	beige	orange
L00873A0001	G62,5/125 OM1	LC Duplex	5,0 m	beige	orange
L00875A0001	G62,5/125 OM1	LC Duplex	10,0 m	beige	orange

Other lengths and types : www.telegaertner.com/ticnet

Order no.	Fiber type	Connector type	Length	Housing Colour	Cable Colour
L00880A0006	E9/125 OS2	SC Duplex	1,0 m	blue	yellow
L00881A0006	E9/125 OS2	SC Duplex	2,0 m	blue	yellow
L00882A0002	E9/125 OS2	SC Duplex	3,0 m	blue	yellow
L00883A0002	E9/125 OS2	SC Duplex	5,0 m	blue	yellow
L00885A0002	E9/125 OS2	SC Duplex	10,0 m	blue	yellow

Other lengths and types : www.telegaertner.com/ticnet

Order no.	Fiber type	Connector type	Length	Housing Colour	Cable Colour
L00880C0007	G50/125 OM2	SC Duplex	1,0 m	beige	orange
L00881C0007	G50/125 OM2	SC Duplex	2,0 m	beige	orange
L00882C0003	G50/125 OM2	SC Duplex	3,0 m	beige	orange
L00883C0003	G50/125 OM2	SC Duplex	5,0 m	beige	orange
L00885C0003	G50/125 OM2	SC Duplex	10,0 m	beige	orange

Other lengths and types : www.telegaertner.com/ticnet

Order no.	Fiber type	Connector type	Length	Housing Colour	Cable Colour
L00880C0010	G50/125 OM3	SC Duplex	1,0 m	aqua	aqua
L00881C0023	G50/125 OM3	SC Duplex	2,0 m	aqua	aqua
L00882C0015	G50/125 OM3	SC Duplex	3,0 m	aqua	aqua
L00883C0017	G50/125 OM3	SC Duplex	5,0 m	aqua	aqua
L00885C0000	G50/125 OM3	SC Duplex	10,0 m	aqua	aqua

Other lengths and types : www.telegaertner.com/ticnet

Order no.	Fiber type	Connector type	Length	Housing Colour	Cable Colour
L00880A0018	G50/125 OM4	SC Duplex	1,0 m	black	violet
L00881A0028	G50/125 OM4	SC Duplex	2,0 m	black	violet
L00882A0020	G50/125 OM4	SC Duplex	3,0 m	black	violet
L00883A0029	G50/125 OM4	SC Duplex	5,0 m	black	violet
L00885A0026	G50/125 OM4	SC Duplex	10,0 m	black	violet

Other lengths and types : www.telegaertner.com/ticnet

Order no.	Fiber type	Connector type	Length	Housing Colour	Cable Colour
L00880C0008	G62,5/125 OM1	SC Duplex	1,0 m	beige	orange
L00881C0008	G62,5/125 OM1	SC Duplex	2,0 m	beige	orange
L00882C0004	G62,5/125 OM1	SC Duplex	3,0 m	beige	orange
L00883C0004	G62,5/125 OM1	SC Duplex	5,0 m	beige	orange
L00885C0004	G62,5/125 OM1	SC Duplex	10,0 m	beige	orange

Other lengths and types : www.telegaertner.com/ticnet

8.1 FO Duplex Patch Cords

8.1.3 Connector Type: SC

Order no.	Fiber type	Connector type	Length	Housing Colour	Cable Colour
L00880A0003	E9/125 OS2	SC	1,0 m	blue	yellow
L00881A0003	E9/125 OS2	SC	2,0 m	blue	yellow
L00882A0005	E9/125 OS2	SC	3,0 m	blue	yellow
L00883A0005	E9/125 OS2	SC	5,0 m	blue	yellow
L00885A0005	E9/125 OS2	SC	10,0 m	blue	yellow
L00881A0021	E9/125 OS2	SC/APC	1,0 m	green	yellow
L00881A0020	E9/125 OS2	SC/APC	2,0 m	green	yellow
L00882A0011	E9/125 OS2	SC/APC	3,0 m	green	yellow
L00883A0012	E9/125 OS2	SC/APC	5,0 m	green	yellow
L00885A0012	E9/125 OS2	SC/APC	10,0 m	green	yellow

Other lengths and types : www.telegaertner.com/ticnet

Order no.	Fiber type	Connector type	Length	Housing Colour	Cable Colour
L00880C0004	G50/125 OM2	SC	1,0 m	beige	orange
L00881C0004	G50/125 OM2	SC	2,0 m	beige	orange
L00882C0006	G50/125 OM2	SC	3,0 m	beige	orange
L00883C0006	G50/125 OM2	SC	5,0 m	beige	orange
L00885C0006	G50/125 OM2	SC	10,0 m	beige	orange

Other lengths and types : www.telegaertner.com/ticnet

Order no.	Fiber type	Connector type	Length	Housing Colour	Cable Colour
L00880C0015	G50/125 OM3	SC	1,0 m	aqua	aqua
L00881C0024	G50/125 OM3	SC	2,0 m	aqua	aqua
L00882C0000	G50/125 OM3	SC	3,0 m	aqua	aqua
L00883C0025	G50/125 OM3	SC	5,0 m	aqua	aqua
L00885C0020	G50/125 OM3	SC	10,0 m	aqua	aqua

Other lengths and types : www.telegaertner.com/ticnet

Order no.	Fiber type	Connector type	Length	Housing Colour	Cable Colour
L00880A0017	G50/125 OM4	SC	1,0 m	black	violet
L00881A0027	G50/125 OM4	SC	2,0 m	black	violet
L00882A0019	G50/125 OM4	SC	3,0 m	black	violet
L00883A0028	G50/125 OM4	SC	5,0 m	black	violet
L00885A0025	G50/125 OM4	SC	10,0 m	black	violet

Other lengths and types : www.telegaertner.com/ticnet

Order no.	Fiber type	Connector type	Length	Housing Colour	Cable Colour
L00880C0005	G62,5/125 OM1	SC	1,0 m	beige	orange
L00881C0005	G62,5/125 OM1	SC	2,0 m	beige	orange
L00882C0007	G62,5/125 OM1	SC	3,0 m	beige	orange
L00883C0007	G62,5/125 OM1	SC	5,0 m	beige	orange
L00885C0007	G62,5/125 OM1	SC	10,0 m	beige	orange

Other lengths and types : www.telegaertner.com/ticnet

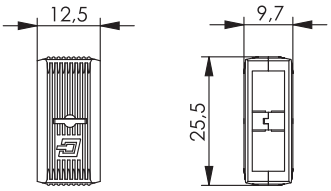

Order no.	Description	Remarks	Colour
B00042A0103	Clamp for SC connector (spacing acc. to SC Duplex)	packaging unit 10 pcs.	blue
B00042A0102	Clamp for SC connector (spacing acc. to SC Duplex)	packaging unit 10 pcs.	green
B00042A0101	Clamp for SC connector (spacing acc. to SC Duplex)	packaging unit 10 pcs.	beige
B00042A0159	Clamp for SC connector (spacing acc. to SC Duplex)	packaging unit 10 pcs.	aqua
B00042A0105	Clamp for SC connector (spacing acc. to SC Duplex)	packaging unit 10 pcs.	yellow
B00042A0107	Clamp for SC connector (spacing acc. to SC Duplex)	packaging unit 10 pcs.	red
B00042A0104	Clamp for SC connector (spacing acc. to SC Duplex)	packaging unit 10 pcs.	black

Connector Type: ST 8.1.4

Order no.	Fiber type	Connector type	Length	Cable Colour
L00810A0005	E9/125 OS2	ST	1,0 m	yellow
L00811A0012	E9/125 OS2	ST	2,0 m	yellow
L00812A0011	E9/125 OS2	ST	3,0 m	yellow
L00813A0005	E9/125 OS2	ST	5,0 m	yellow
L00816A0005	E9/125 OS2	ST	10,0 m	yellow

Other lengths and types : www.telegaertner.com/ticnet

Order no.	Fiber type	Connector type	Length	Cable Colour
L00810A0003	G50/125 OM2	ST	1,0 m	orange
L00811A0007	G50/125 OM2	ST	2,0 m	orange
L00812A0007	G50/125 OM2	ST	3,0 m	orange
L00813A0003	G50/125 OM2	ST	5,0 m	orange
L00816A0003	G50/125 OM2	ST	10,0 m	orange

Other lengths and types : www.telegaertner.com/ticnet

Order no.	Fiber type	Connector type	Length	Cable Colour
L00810A0010	G50/125 OM3	ST	1,0 m	aqua
L00811A0028	G50/125 OM3	ST	2,0 m	aqua
L00812A0018	G50/125 OM3	ST	3,0 m	aqua
L00813A0008	G50/125 OM3	ST	5,0 m	aqua
L00815A0006	G50/125 OM3	ST	10,0 m	aqua

Other lengths and types : www.telegaertner.com/ticnet

Order no.	Fiber type	Connector type	Length	Cable Colour
L00810A0014	G50/125 OM4	ST	1,0 m	violet
L00811A0034	G50/125 OM4	ST	2,0 m	violet
L00812A0021	G50/125 OM4	ST	3,0 m	violet
L00813A0014	G50/125 OM4	ST	5,0 m	violet
L00815A0008	G50/125 OM4	ST	10,0 m	violet

Other lengths and types : www.telegaertner.com/ticnet

Order no.	Fiber type	Connector type	Length	Cable Colour
L00810A0004	G62,5/125 OM1	ST	1,0 m	orange
L00811A0009	G62,5/125 OM1	ST	2,0 m	orange
L00812A0009	G62,5/125 OM1	ST	3,0 m	orange
L00813A0004	G62,5/125 OM1	ST	5,0 m	orange
L00816A0004	G62,5/125 OM1	ST	10,0 m	orange

Other lengths and types : www.telegaertner.com/ticnet

8.1 FO Duplex Patch Cords

8.1.5 Connector Type: E2000

Order no.	Fiber type	Connector type	Length	Housing Colour	Cable Colour
L00850A0001	E9/125 OS2	E2000/APC	1,0 m	green	yellow
L00851A0008	E9/125 OS2	E2000/APC	2,0 m	green	yellow
L00852A0000	E9/125 OS2	E2000/APC	3,0 m	green	yellow
L00853A0001	E9/125 OS2	E2000/APC	5,0 m	green	yellow
L00855A0001	E9/125 OS2	E2000/APC	10,0 m	green	yellow

Other lengths and types : www.telegaertner.com/ticnet

8.2 FO Duplex Adaptor Cords

8.2.1 Connector Types: 1st end SC Duplex, 2nd end LC Duplex

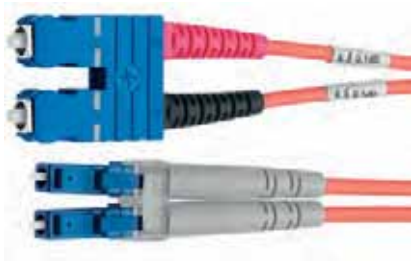

Order no.	Fiber type	Connector type	Length	Housing Colour	Cable Colour
L00890A0041	E9/125 OS2	1st end SC Duplex, 2nd end LC Duplex	1,0 m	blue	yellow
L00891A0017	E9/125 OS2	1st end SC Duplex, 2nd end LC Duplex	2,0 m	blue	yellow
L00892A0040	E9/125 OS2	1st end SC Duplex, 2nd end LC Duplex	3,0 m	blue	yellow
L00893A0043	E9/125 OS2	1st end SC Duplex, 2nd end LC Duplex	5,0 m	blue	yellow
L00895A0040	E9/125 OS2	1st end SC Duplex, 2nd end LC Duplex	10,0 m	blue	yellow

Order no.	Fiber type	Connector type	Length	Housing Colour	Cable Colour
L00890C0038	G50/125 OM2	1st end SC Duplex, 2nd end LC Duplex	1,0 m	beige	orange
L00891C0018	G50/125 OM2	1st end SC Duplex, 2nd end LC Duplex	2,0 m	beige	orange
L00892C0037	G50/125 OM2	1st end SC Duplex, 2nd end LC Duplex	3,0 m	beige	orange
L00893C0040	G50/125 OM2	1st end SC Duplex, 2nd end LC Duplex	5,0 m	beige	orange
L00895C0037	G50/125 OM2	1st end SC Duplex, 2nd end LC Duplex	10,0 m	beige	orange
L00890A0080	G50/125 OM4	1st end SC Duplex, 2nd end LC Duplex	1,0 m	black	violet
L00891A0082	G50/125 OM4	1st end SC Duplex, 2nd end LC Duplex	2,0 m	black	violet
L00892A0075	G50/125 OM4	1st end SC Duplex, 2nd end LC Duplex	3,0 m	black	violet
L00893A0079	G50/125 OM4	1st end SC Duplex, 2nd end LC Duplex	5,0 m	black	violet
L00895A0073	G50/125 OM4	1st end SC Duplex, 2nd end LC Duplex	10,0 m	black	violet

Order no.	Fiber type	Connector type	Length	Housing Colour	Cable Colour
L00890C0055	G50/125 OM3	1st end SC Duplex, 2nd end LC Duplex	1,0 m	aqua	aqua
L00891C0042	G50/125 OM3	1st end SC Duplex, 2nd end LC Duplex	2,0 m	aqua	aqua
L00892C0024	G50/125 OM3	1st end SC Duplex, 2nd end LC Duplex	3,0 m	aqua	aqua
L00893C0022	G50/125 OM3	1st end SC Duplex, 2nd end LC Duplex	5,0 m	aqua	aqua
L00895C0021	G50/125 OM3	1st end SC Duplex, 2nd end LC Duplex	10,0 m	aqua	aqua

Order no.	Fiber type	Connector type	Length	Housing Colour	Cable Colour
L00890C0039	G62,5/125 OM1	1st end SC Duplex, 2nd end LC Duplex	1,0 m	beige	orange
L00891C0019	G62,5/125 OM1	1st end SC Duplex, 2nd end LC Duplex	2,0 m	beige	orange
L00892C0038	G62,5/125 OM1	1st end SC Duplex, 2nd end LC Duplex	3,0 m	beige	orange
L00893C0041	G62,5/125 OM1	1st end SC Duplex, 2nd end LC Duplex	5,0 m	beige	orange
L00895C0038	G62,5/125 OM1	1st end SC Duplex, 2nd end LC Duplex	10,0 m	beige	orange

Connector Types: 1st end 2xST, 2nd end SC Duplex

8.2.2

Order no.	Fiber type	Connector type	Length	Housing Colour SC	Cable Colour
L00890A0018	E9/125 OS2	1st end 2xST, 2nd end SC Duplex	1,0 m	blue	yellow
L00811A0022	E9/125 OS2	1st end 2xST, 2nd end SC Duplex	2,0 m	blue	yellow
L00892A0005	E9/125 OS2	1st end 2xST, 2nd end SC Duplex	3,0 m	blue	yellow
L00893A0005	E9/125 OS2	1st end 2xST, 2nd end SC Duplex	5,0 m	blue	yellow
L00895A0004	E9/125 OS2	1st end 2xST, 2nd end SC Duplex	10,0 m	blue	yellow

Order no.	Fiber type	Connector type	Length	Housing Colour SC	Cable Colour
L00890C0019	G50/125 OM2	1st end 2xST, 2nd end SC Duplex	1,0 m	beige	orange
L00891C0071	G50/125 OM2	1st end 2xST, 2nd end SC Duplex	2,0 m	beige	orange
L00892C0001	G50/125 OM2	1st end 2xST, 2nd end SC Duplex	3,0 m	beige	orange
L00893C0003	G50/125 OM2	1st end 2xST, 2nd end SC Duplex	5,0 m	beige	orange
L00895C0003	G50/125 OM2	1st end 2xST, 2nd end SC Duplex	10,0 m	beige	orange

Order no.	Fiber type	Connector type	Length	Housing Colour SC	Cable Colour
L00890C0059	G50/125 OM3	1st end 2xST, 2nd end SC Duplex	1,0 m	aqua	aqua
L00891C0026	G50/125 OM3	1st end 2xST, 2nd end SC Duplex	2,0 m	aqua	aqua
L00892C0048	G50/125 OM3	1st end 2xST, 2nd end SC Duplex	3,0 m	aqua	aqua
L00893C0028	G50/125 OM3	1st end 2xST, 2nd end SC Duplex	5,0 m	aqua	aqua
L00895C0025	G50/125 OM3	1st end 2xST, 2nd end SC Duplex	10,0 m	aqua	aqua
L00890A0077	G50/125 OM4	1st end 2xST, 2nd end SC Duplex	1,0 m	black	violet
L00891A0079	G50/125 OM4	1st end 2xST, 2nd end SC Duplex	2,0 m	black	violet
L00892A0072	G50/125 OM4	1st end 2xST, 2nd end SC Duplex	3,0 m	black	violet
L00893A0076	G50/125 OM4	1st end 2xST, 2nd end SC Duplex	5,0 m	black	violet
L00895A0070	G50/125 OM4	1st end 2xST, 2nd end SC Duplex	10,0 m	black	violet

Order no.	Fiber type	Connector type	Length	Housing Colour SC	Cable Colour
L00890A0077	G50/125 OM4	1st end 2xST, 2nd end SC Duplex	1,0 m	black	violet
L00891A0079	G50/125 OM4	1st end 2xST, 2nd end SC Duplex	2,0 m	black	violet
L00892A0072	G50/125 OM4	1st end 2xST, 2nd end SC Duplex	3,0 m	black	violet
L00893A0076	G50/125 OM4	1st end 2xST, 2nd end SC Duplex	5,0 m	black	violet
L00895A0070	G50/125 OM4	1st end 2xST, 2nd end SC Duplex	10,0 m	black	violet

Order no.	Fiber type	Connector type	Length	Housing Colour SC	Cable Colour
L00890C0021	G62,5/125 OM1	1st end 2xST, 2nd end SC Duplex	1,0 m	beige	orange
L00891C0072	G62,5/125 OM1	1st end 2xST, 2nd end SC Duplex	2,0 m	beige	orange
L00892C0009	G62,5/125 OM1	1st end 2xST, 2nd end SC Duplex	3,0 m	beige	orange
L00893C0001	G62,5/125 OM1	1st end 2xST, 2nd end SC Duplex	5,0 m	beige	orange
L00895C0001	G62,5/125 OM1	1st end 2xST, 2nd end SC Duplex	10,0 m	beige	orange

8.2

8.2 FO Duplex Adaptor Cords

8.2.3 Connector Types: 1st end 2xST, 2nd end LC Duplex

Order no.	Fiber type	Connector type	Length	Housing Colour LC	Cable Colour
L00890A0040	E9/125 OS2	1st end 2xST, 2nd end LC Duplex	1,0 m	blue	yellow
L00891A0014	E9/125 OS2	1st end 2xST, 2nd end LC Duplex	2,0 m	blue	yellow
L00892A0039	E9/125 OS2	1st end 2xST, 2nd end LC Duplex	3,0 m	blue	yellow
L00893A0042	E9/125 OS2	1st end 2xST, 2nd end LC Duplex	5,0 m	blue	yellow
L00895A0039	E9/125 OS2	1st end 2xST, 2nd end LC Duplex	10,0 m	blue	yellow

Order no.	Fiber type	Connector type	Length	Housing Colour LC	Cable Colour
L00890A0036	G50/125 OM2	1st end 2xST, 2nd end LC Duplex	1,0 m	beige	orange
L00891A0015	G50/125 OM2	1st end 2xST, 2nd end LC Duplex	2,0 m	beige	orange
L00892A0035	G50/125 OM2	1st end 2xST, 2nd end LC Duplex	3,0 m	beige	orange
L00893A0038	G50/125 OM2	1st end 2xST, 2nd end LC Duplex	5,0 m	beige	orange
L00895A0035	G50/125 OM2	1st end 2xST, 2nd end LC Duplex	10,0 m	beige	orange

Order no.	Fiber type	Connector type	Length	Housing Colour LC	Cable Colour
L00890A0058	G50/125 OM3	1st end 2xST, 2nd end LC Duplex	1,0 m	aqua	aqua
L00891A0029	G50/125 OM3	1st end 2xST, 2nd end LC Duplex	2,0 m	aqua	aqua
L00892A0029	G50/125 OM3	1st end 2xST, 2nd end LC Duplex	3,0 m	aqua	aqua
L00893A0027	G50/125 OM3	1st end 2xST, 2nd end LC Duplex	5,0 m	aqua	aqua
L00895A0024	G50/125 OM3	1st end 2xST, 2nd end LC Duplex	10,0 m	aqua	aqua

Order no.	Fiber type	Connector type	Length	Housing Colour LC	Cable Colour
L00890A0078	G50/125 OM4	1st end 2xST, 2nd end LC Duplex	1,0 m	black	violet
L00891A0080	G50/125 OM4	1st end 2xST, 2nd end LC Duplex	2,0 m	black	violet
L00892A0073	G50/125 OM4	1st end 2xST, 2nd end LC Duplex	3,0 m	black	violet
L00893A0077	G50/125 OM4	1st end 2xST, 2nd end LC Duplex	5,0 m	black	violet
L00895A0071	G50/125 OM4	1st end 2xST, 2nd end LC Duplex	10,0 m	black	violet
L00890A0037	G62,5/125 OM1	1st end 2xST, 2nd end LC Duplex	1,0 m	beige	orange
L00891A0016	G62,5/125 OM1	1st end 2xST, 2nd end LC Duplex	2,0 m	beige	orange
L00892A0036	G62,5/125 OM1	1st end 2xST, 2nd end LC Duplex	3,0 m	beige	orange
L00893A0039	G62,5/125 OM1	1st end 2xST, 2nd end LC Duplex	5,0 m	beige	orange
L00895A0036	G62,5/125 OM1	1st end 2xST, 2nd end LC Duplex	10,0 m	beige	orange

Order no.	Description	Remarks
B00010A0033	captive protection cap	diameter 1,25 mm; PU: 1.000 pcs.
B00010A0034	captive protection cap	diameter 2,5 mm; PU: 1.000 pcs.

TICNET Configurator

Ideal for planners and installers: simply assemble cables and fiber pigtails online: do you want to assemble cables and connectors online or a fiber optic patch panel to meet your specific needs and then send an order inquiry to your local specialist retailer straight away? Then the TICNET Configurator developed by Telegärtner is just what you need!

Define product:

1. define fiber type and length
2. choose connector type and marking

Show final product:

All the information relating to the product you require is listed in a clear breakdown including the gross list prices classified by price bracket. Your data is available in PDF format for download after configuration. you can view the products you have configurated at any time by entering your TICNET configuration number and security code on the TICNET homepage. The number and security code are sent to you in an email.

Add configuration to shopping basket:

It is possible to change quantity, copy with different cable length and show parts list of your configuration. Also you can send an order inquiry to Telegärtner.

www.telegaertner.com/ticnet

9

M12x1 Connecting Cable

9 M12x1 Connecting Cable

9.1 M12x1 D-coded Connecting Cables 218

9.1.1 M12x1 D-coded Cable Plug to M12x1 D-coded Cable Plug, AWG 22/7, SF/UTP, PUR, Cat.5 218

9.1.2 M12x1 D-coded Cable Plug to RJ45 Cable Plug, AWG 22/7, SF/UTP, PUR, Cat.5 218

9.1.3 M12x1 D-coded Cable Plug to free cable end, AWG 22/7, SF/UTP, PUR, Cat.5 219

9.2 M12x1 X-coded Connecting Cables 219

9.2.1 M12x1 X-coded Cable Plug to M12x1 X-coded Cable Plug, AWG 26/7, S/FTP, PUR, Cat.6_A 219

9.2.2 M12x1 X-coded Cable Plug to RJ45 Cable Plug, AWG 26/7, S/FTP, PUR, Cat.6_A 220

9.2.3 M12x1 X-coded Cable Plug to free cable end, AWG 26/7, S/FTP, PUR, Cat.6_A 221

9.2.4 M12x1 X-coded Cable Plug to M12x1 X-coded Cable Socket, AWG 26/7, S/FTP, PUR, Cat.6_A 221

9.2.5 M12x1 X-coded Cable Socket IP20 to RJ45 Cable Plug, AWG 26/7, S/FTP, PUR, Cat.6_A 222

9.2.6 M12x1 X-coded Cable Socket IP67 to free cable end, AWG 26/7, S/FTP, PUR, Cat.6_A 222

9.3 M12x1 Accessories 223

	Connecting Cable S/FTP Cat.7 PUR	Connecting Cable SF/UTP Cat.5 PUR
Mechanical Characteristics		
Durability (mating cycles) M12	≥ 100	≥ 100
Durability (mating cycles) RJ45	≥ 750	≥ 750
Cable structure	LI02YSC11Y PUR 4x2xAWG 26/7 PiMF	LI-2YH(ST)C11Y PUR 2x2xAWG 22/7
Stranded wire	AWG26 (7 x 0.16 mm)	AWG22 (7 x 0.254 mm)
Insulation	Foam PE, Ø 1.04 mm	Polyethyolene, Ø 1.5 mm
Pair shielding	Al-foil, outside conducting	-
Overall shielding	tin plated copper braid	tin plated copper braid, Al-foil, inside conducting
Outer jacket	Ø 6.2 ±0.2 mm	Ø 6.4 ±0.3 mm
Colour	RAL 6018	RAL 6018
Climatic Characteristics		
UL	E344985	-
flame-retardant test	IEC 60332-1	IEC 60332-1
Operating temperature in °C	-40° C to 80° C	-40° C to 80° C

Nomenclature

Example: CP01CP01B-SFTP2607C7-1PUR-A0050

1 2 3 4 5 6 7 8 9 10

1 = Connector Side 1

CP01	Cable plug straight, X-coded, moulded, IP67
CP02	Cable plug straight, D-coded, moulded, IP67
CS01	Cable socket straight, X-coded, IP20
CS02	Cable socket straight, X-coded, moulded, IP67

2 = Connector Side 2

CP01	Cable plug straight, X-coded, moulded, IP67
CP02	Cable plug straight, D-coded, moulded, IP67
CP03	RJ45 Plug straight, moulded, IP67
CP04	RJ45 Plug straight, IP20 (for AWG24/1-22/1 and AWG27/7-22/7)
CP05	RJ45 Plug straight, IP20 (for AWG26/1-24/1 and AWG27/7-24/7)
CS01	Cable socket straight, X-coded, IP20
CS02	Cable socket straight, X-coded, moulded, IP67
FC00	Free cable end

3 = Boot Colour

A	green
B	black

4 = Screen

SFUTP	SF/UTP
-SFTP	S/FTP

5 = Conductor

2607	AWG26/7
2207	AWG22/7

6 = Bulk Cable

C5-	Cat.5
C7-	Cat.7

7 = Connectin

1	1:1

8 = Material Outer Jacket

PUR-	PUR

9 = Colour Outer Jacket

A	green

10 = Cable Length

0050	0.5 m
0100	1.0 m
0200	2.0 m
0300	3.0 m
0500	5.0 m
0750	7.5 m
1000	10.0 m

9.1 M12x1 D-coded Connecting Cable

9.1.1 M12x1 D-coded Cable Plug to M12x1 D-coded Cable Plug, AWG 22/7, SF/UTP, PUR, Cat.5

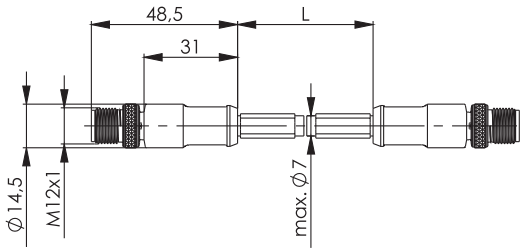

Order no.	Description	Short name	Type	Colour	Length
L80210A0000	STX M12x1-M12x1 CC D-cod. Cat.5	CP02CP02BSFUTP2207C5-1PUR-A0050	1st end: M12x1 cable plug D-coded, IP67; 2nd end: M12x1 cable plug D-coded, IP67	boot: black; jacket: green	0,5 m
L80210A0001	STX M12x1-M12x1 CC D-cod. Cat.5	CP02CP02BSFUTP2207C5-1PUR-A0100	1st end: M12x1 cable plug D-coded, IP67; 2nd end: M12x1 cable plug D-coded, IP67	boot: black; jacket: green	1,0 m
L80211A0000	STX M12x1-M12x1 CC D-cod. Cat.5	CP02CP02BSFUTP2207C5-1PUR-A0200	1st end: M12x1 cable plug D-coded, IP67; 2nd end: M12x1 cable plug D-coded, IP67	boot: black; jacket: green	2,0 m
L80212A0000	STX M12x1-M12x1 CC D-cod. Cat.5	CP02CP02BSFUTP2207C5-1PUR-A0300	1st end: M12x1 cable plug D-coded, IP67; 2nd end: M12x1 cable plug D-coded, IP67	boot: black; jacket: green	3,0 m
L80213A0000	STX M12x1-M12x1 CC D-cod. Cat.5	CP02CP02BSFUTP2207C5-1PUR-A0500	1st end: M12x1 cable plug D-coded, IP67; 2nd end: M12x1 cable plug D-coded, IP67	boot: black; jacket: green	5,0 m
L80214A0000	STX M12x1-M12x1 CC D-cod. Cat.5	CP02CP02BSFUTP2207C5-1PUR-A0750	1st end: M12x1 cable plug D-coded, IP67; 2nd end: M12x1 cable plug D-coded, IP67	boot: black; jacket: green	7,5 m
L80215A0000	STX M12x1-M12x1 CC D-cod. Cat.5	CP02CP02BSFUTP2207C5-1PUR-A1000	1st end: M12x1 cable plug D-coded, IP67; 2nd end: M12x1 cable plug D-coded, IP67	boot: black; jacket: green	10,0 m

9.1.2 M12x1 D-coded Cable Plug to RJ45 Cable Plug, AWG 22/7, SF/UTP, PUR, Cat.5

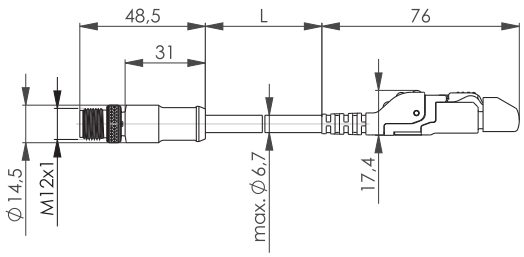

Schaltbild / Connection Diagram 1:1
Belegung / pin assignment

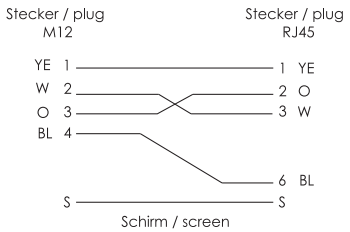

Order no.	Description	Short name	Type	Colour	Length
L80310A0000	STX M12x1-RJ45 CC D-cod. Cat.5	CP02CP04ASFUTP2207C5-1PUR-A0050	1st end: M12x1 cable plug D-coded, IP67; 2nd end: RJ45 cable plug IP20	boot: black; jacket: green	0,5 m
L80310A0001	STX M12x1-RJ45 CC D-cod. Cat.5	CP02CP04ASFUTP2207C5-1PUR-A0100	1st end: M12x1 cable plug D-coded, IP67; 2nd end: RJ45 cable plug IP20	boot: black; jacket: green	1,0 m
L80311A0000	STX M12x1-RJ45 CC D-cod. Cat.5	CP02CP04ASFUTP2207C5-1PUR-A0200	1st end: M12x1 cable plug D-coded, IP67; 2nd end: RJ45 cable plug IP20	boot: black; jacket: green	2,0 m
L80312A0000	STX M12x1-RJ45 CC D-cod. Cat.5	CP02CP04ASFUTP2207C5-1PUR-A0300	1st end: M12x1 cable plug D-coded, IP67; 2nd end: RJ45 cable plug IP20	boot: black; jacket: green	3,0 m
L80313A0000	STX M12x1-RJ45 CC D-cod. Cat.5	CP02CP04ASFUTP2207C5-1PUR-A0500	1st end: M12x1 cable plug D-coded, IP67; 2nd end: RJ45 cable plug IP20	boot: black; jacket: green	5,0 m

M12x1 D-coded Cable Plug to free cable end, AWG 22/7, SF/UTP, PUR, Cat.5 — 9.1.3

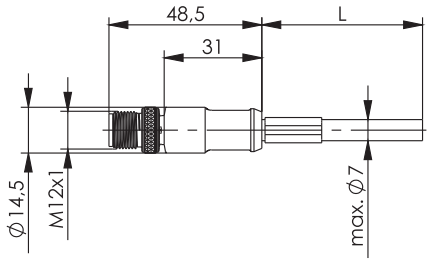

Order no.	Description	Short name	Type	Colour	Length
L83610A0000	STX M12x1 CC D-cod. Cat.5	CP02FC00BSFUTP2207C5-1PUR-A0050	1st end: M12x1 cable plug, IP67; 2nd end: free cable end	boot: black; jacket: green	0,5 m
L83610A0001	STX M12x1 CC D-cod. Cat.5	CP02FC00BSFUTP2207C5-1PUR-A0100	1st end: M12x1 cable plug, IP67; 2nd end: free cable end	boot: black; jacket: green	1,0 m
L83611A0000	STX M12x1 CC D-cod. Cat.5	CP02FC00BSFUTP2207C5-1PUR-A0200	1st end: M12x1 cable plug, IP67; 2nd end: free cable end	boot: black; jacket: green	2,0 m
L83612A0000	STX M12x1 CC D-cod. Cat.5	CP02FC00BSFUTP2207C5-1PUR-A0300	1st end: M12x1 cable plug, IP67; 2nd end: free cable end	boot: black; jacket: green	3,0 m
L83613A0000	STX M12x1 CC D-cod. Cat.5	CP02FC00BSFUTP2607C5-1PUR-A0500	1st end: M12x1 cable plug, IP67; 2nd end: free cable end	boot: black; jacket: green	5,0 m
L83614A0000	STX M12x1 CC D-cod. Cat.5	CP02FC00BSFUTP2207C5-1PUR-A0750	1st end: M12x1 cable plug, IP67; 2nd end: free cable end	boot: black; jacket: green	7,5 m
L83615A0000	STX M12x1 CC D-cod. Cat.5	CP02FC00BSFUTP2207C5-1PUR-A1000	1st end: M12x1 cable plug, IP67; 2nd end: free cable end	boot: black; jacket: green	10,0 m

M12x1 X-coded Connecting Cable — 9.2

M12x1 X-coded Cable Plug to M12x1 X-coded Cable Plug, AWG 26/7, S/FTP, PUR, Cat.6$_A$ — 9.2.1

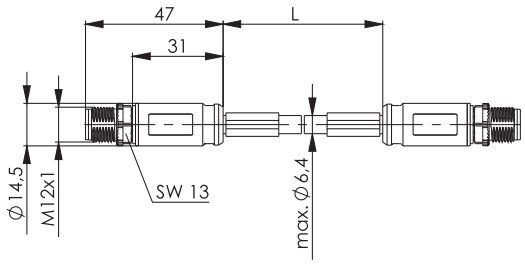

Cat.6$_A$

c UL us

Order no.	Description	Short name	Type	Colour	Length
L80000A0000	STX M12x1-M12x1 CC X-cod. Cat.6$_A$	CP01CP01B-SFTP2607C7-1PUR-A0050	1st end: M12x1 cable plug X-coded IP67; 2nd end: M12x1 cable plug X-coded, IP67	boot: black; jacket: green	0,5 m
L80000A0001	STX M12x1-M12x1 CC X-cod. Cat.6$_A$	CP01CP01B-SFTP2607C7-1PUR-A0100	1st end: M12x1 cable plug X-coded IP67; 2nd end: M12x1 cable plug X-coded, IP67	boot: black; jacket: green	1,0 m
L80001A0000	STX M12x1-M12x1 CC X-cod. Cat.6$_A$	CP01CP01B-SFTP2607C7-1PUR-A0200	1st end: M12x1 cable plug X-coded IP67; 2nd end: M12x1 cable plug X-coded, IP67	boot: black; jacket: green	2,0 m
L80002A0000	STX M12x1-M12x1 CC X-cod. Cat.6$_A$	CP01CP01B-SFTP2607C7-1PUR-A0300	1st end: M12x1 cable plug X-coded IP67; 2nd end: M12x1 cable plug X-coded, IP67	boot: black; jacket: green	3,0 m
L80003A0000	STX M12x1-M12x1 CC X-cod. Cat.6$_A$	CP01CP01B-SFTP2607C7-1PUR-A0500	1st end: M12x1 cable plug X-coded IP67; 2nd end: M12x1 cable plug X-coded, IP67	boot: black; jacket: green	5,0 m
L80004A0000	STX M12x1-M12x1 CC X-cod. Cat.6$_A$	CP01CP01B-SFTP2607C7-1PUR-A0750	1st end: M12x1 cable plug X-coded IP67; 2nd end: M12x1 cable plug X-coded, IP67	boot: black; jacket: green	7,5 m
L80005A0000	STX M12x1-M12x1 CC X-cod. Cat.6$_A$	CP01CP01B-SFTP2607C7-1PUR-A1000	1st end: M12x1 cable plug X-coded IP67; 2nd end: M12x1 cable plug X-coded, IP67	boot: black; jacket: green	10,0 m

9.2 M12x1 X-coded Connecting Cable

9.1.2 M12x1 X-coded Cable Plug to RJ45 Cable Plug, AWG 26/7, S/FTP, PUR, Cat.6$_A$

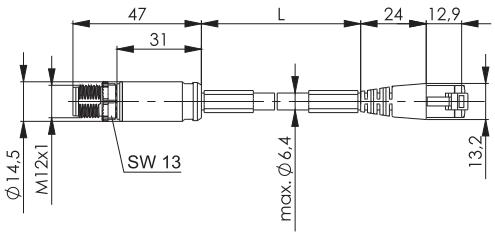

Schaltbild / Connection Diagram
Belegung / pin assignment

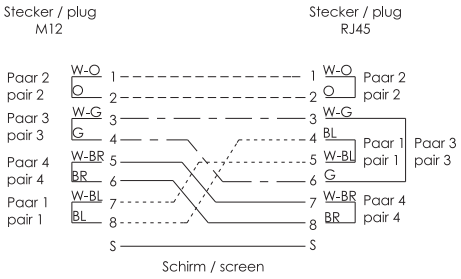

Order no.	Description	Short name	Type	Colour	Length
L80100A0000	STX M12x1-RJ45 CC X-cod. Cat.6$_A$	CP01CP05B-SFTP2607C7-1PUR-A0050	1st end: M12x1 cable plug X-coded, IP67; 2nd end: RJ45 cable plug IP20	boot: black; jacket: green	0,5 m
L80100A0001	STX M12x1-RJ45 CC X-cod. Cat.6$_A$	CP01CP05B-SFTP2607C7-1PUR-A0100	1st end: M12x1 cable plug X-coded, IP67; 2nd end: RJ45 cable plug IP20	boot: black; jacket: green	1,0 m
L80101A0000	STX M12x1-RJ45 CC X-cod. Cat.6$_A$	CP01CP05B-SFTP2607C7-1PUR-A0200	1st end: M12x1 cable plug X-coded, IP67; 2nd end: RJ45 cable plug IP20	boot: black; jacket: green	2,0 m
L80102A0000	STX M12x1-RJ45 CC X-cod. Cat.6$_A$	CP01CP05B-SFTP2607C7-1PUR-A0300	1st end: M12x1 cable plug X-coded, IP67; 2nd end: RJ45 cable plug IP20	boot: black; jacket: green	3,0 m
L80103A0000	STX M12x1-RJ45 CC X-cod. Cat.6$_A$	CP01CP05B-SFTP2607C7-1PUR-A0500	1st end: M12x1 cable plug X-coded, IP67; 2nd end: RJ45 cable plug IP20	boot: black; jacket: green	5,0 m
L80104A0000	STX M12x1-RJ45 CC X-cod. Cat.6$_A$	CP01CP05B-SFTP2607C7-1PUR-A0750	1st end: M12x1 cable plug X-coded, IP67; 2nd end: RJ45 cable plug IP20	boot: black; jacket: green	7,5 m
L80105A0000	STX M12x1-RJ45 CC X-cod. Cat.6$_A$	CP01CP05B-SFTP2607C7-1PUR-A1000	1st end: M12x1 cable plug X-coded, IP67; 2nd end: RJ45 cable plug IP20	boot: black; jacket: green	10,0 m

M12x1 X-coded Cable Plug to free cable end, AWG 26/7, S/FTP, PUR 9.2.3

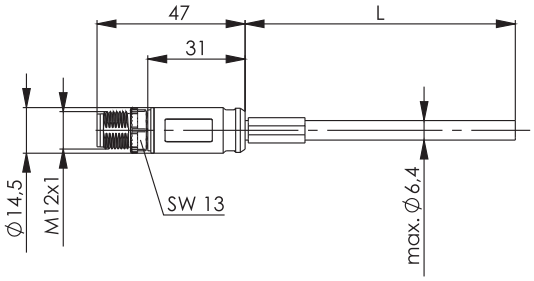

Order no.	Description	Short name	Type	Colour	Length
L83500A0000	STX M12x1 CC X-cod. Cat.6$_A$	CP01FC00B-SFTP2607C7-1PUR-A0050	1st end: M12x1 cable plug, IP67; 2nd end: free cable end	boot: black; jacket: green	0,5 m
L83500A0001	STX M12x1 CC X-cod. Cat.6$_A$	CP01FC00B-SFTP2607C7-1PUR-A0100	1st end: M12x1 cable plug, IP67; 2nd end: free cable end	boot: black; jacket: green	1,0 m
L83501A0000	STX M12x1 CC X-cod. Cat.6$_A$	CP01FC00B-SFTP2607C7-1PUR-A0200	1st end: M12x1 cable plug, IP67; 2nd end: free cable end	boot: black; jacket: green	2,0 m
L83502A0000	STX M12x1 CC X-cod. Cat.6$_A$	CP01FC00B-SFTP2607C7-1PUR-A0300	1st end: M12x1 cable plug, IP67; 2nd end: free cable end	boot: black; jacket: green	3,0 m
L83503A0000	STX M12x1 CC X-cod. Cat.6$_A$	CP01FC00B-SFTP2607C7-1PUR-A0500	1st end: M12x1 cable plug, IP67; 2nd end: free cable end	boot: black; jacket: green	5,0 m
L83504A0000	STX M12x1 CC X-cod. Cat.6$_A$	CP01FC00B-SFTP2607C7-1PUR-A0750	1st end: M12x1 cable plug, IP67; 2nd end: free cable end	boot: black; jacket: green	7,5 m
L83505A0000	STX M12x1 CC X-cod. Cat.6$_A$	CP01FC00B-SFTP2607C7-1PUR-A1000	1st end: M12x1 cable plug, IP67; 2nd end: free cable end	boot: black; jacket: green	10,0 m

M12x1 X-coded Cable Plug to M12x1 X-coded Cable Plug, AWG 26/7, S/FTP, PUR, Cat.6$_A$ 9.2.4

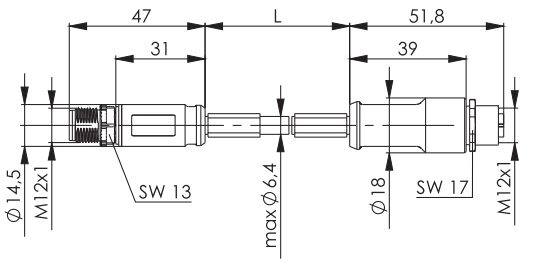

Cat.6$_A$

Order no.	Description	Short name	Type	Colour	Length
L82000A0000	STX M12x1-M12x1 CC X-cod. Cat.6$_A$	CP01CS02B-SFTP2607C7-1PUR-A0050	1st end: M12x1 cable plug X-coded, IP67; 2nd end: M12x1 cable socket X-coded, IP67	boot: black; jacket: green	0,5 m
L82000A0001	STX M12x1-M12x1 CC X-cod. Cat.6$_A$	CP01CS02B-SFTP2607C7-1PUR-A0100	1st end: M12x1 cable plug X-coded, IP67; 2nd end: M12x1 cable socket X-coded, IP67	boot: black; jacket: green	1,0 m
L82001A0000	STX M12x1-M12x1 CC X-cod. Cat.6$_A$	CP01CS02B-SFTP2607C7-1PUR-A0200	1st end: M12x1 cable plug X-coded, IP67; 2nd end: M12x1 cable socket X-coded, IP67	boot: black; jacket: green	2,0 m
L82002A0000	STX M12x1-M12x1 CC X-cod. Cat.6$_A$	CP01CS02B-SFTP2607C7-1PUR-A0300	1st end: M12x1 cable plug X-coded, IP67; 2nd end: M12x1 cable socket X-coded, IP67	boot: black; jacket: green	3,0 m
L82003A0000	STX M12x1-M12x1 CC X-cod. Cat.6$_A$	CP01CS02B-SFTP2607C7-1PUR-A0500	1st end: M12x1 cable plug X-coded, IP67; 2nd end: M12x1 cable socket X-coded, IP67	boot: black; jacket: green	5,0 m
L82004A0000	STX M12x1-M12x1 CC X-cod. Cat.6$_A$	CP01CS02B-SFTP2607C7-1PUR-A0750	1st end: M12x1 cable plug X-coded, IP67; 2nd end: M12x1 cable socket X-coded, IP67	boot: black; jacket: green	7,5 m
L82005A0000	STX M12x1-M12x1 CC X-cod. Cat.6$_A$	CP01CS02B-SFTP2607C7-1PUR-A1000	1st end: M12x1 cable plug X-coded, IP67; 2nd end: M12x1 cable socket X-coded, IP67	boot: black; jacket: green	10,0 m

9.2 M12x1 X-coded Connecting Cable

9.2.5 M12x1 X-coded Cable Socket to RJ45 Cable Plug AWG 26/7, S/FTP, PUR, Cat.6$_A$

Cat.6$_A$

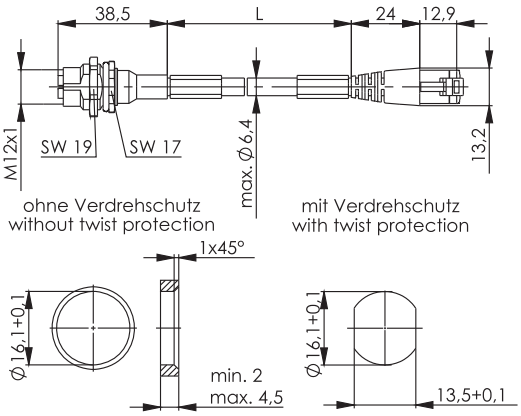

Order no.	Description	Short name	Type	Colour	Length
L82100A0000	STX M12x1-RJ45 CC X-cod. Cat.6$_A$	CS01CP05A-SFTP2607C7-1PUR-A0050	1st end: M12x1 X-coded cable socket IP20; 2nd end: RJ45 cable plug IP20	boot: green; jacket: green	0,5 m
L82100A0001	STX M12x1-RJ45 CC X-cod. Cat.6$_A$	CS01CP05A-SFTP2607C7-1PUR-A0100	1st end: M12x1 X-coded cable socket IP20; 2nd end: RJ45 cable plug IP20	boot: green; jacket: green	1,0 m
L82101A0000	STX M12x1-RJ45 CC X-cod. Cat.6$_A$	CS01CP05A-SFTP2607C7-1PUR-A0200	1st end: M12x1 X-coded cable socket IP20; 2nd end: RJ45 cable plug IP20	boot: green; jacket: green	2,0 m
L82102A0000	STX M12x1-RJ45 CC X-cod. Cat.6$_A$	CS01CP05A-SFTP2607C7-1PUR-A0300	1st end: M12x1 X-coded cable socket IP20; 2nd end: RJ45 cable plug IP20	boot: green; jacket: green	3,0 m
L82103A0000	STX M12x1-RJ45 CC X-cod. Cat.6$_A$	CS01CP05A-SFTP2607C7-1PUR-A0500	1st end: M12x1 X-coded cable socket IP20; 2nd end: RJ45 cable plug IP20	boot: green; jacket: green	5,0 m

9.2.6 M12x1 X-coded Cable Socket to free cable end, AWG 26/7, S/FTP, PUR

Cat.6$_A$

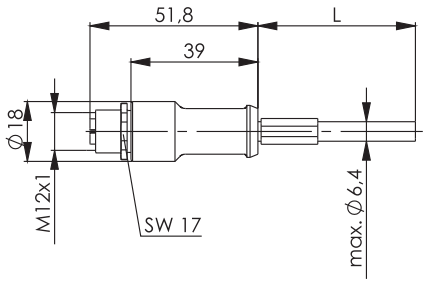

Order no.	Description	Short name	Type	Colour	Length
L84500A0000	STX M12x1 CC X-cod. Cat.6$_A$	CS02FC00B-SFTP2607C7-1PUR-A0050	1st end: M12x1 cable socket, IP67; 2nd end: free cable end	boot: black; jacket: green	0,5 m
L84500A0001	STX M12x1 CC X-cod. Cat.6$_A$	CS02FC00B-SFTP2607C7-1PUR-A0100	1st end: M12x1 cable socket, IP67; 2nd end: free cable end	boot: black; jacket: green	1,0 m
L84501A0000	STX M12x1 CC X-cod. Cat.6$_A$	CS02FC00B-SFTP2607C7-1PUR-A0200	1st end: M12x1 cable socket, IP67; 2nd end: free cable end	boot: black; jacket: green	2,0 m
L84502A0000	STX M12x1 CC X-cod. Cat.6$_A$	CS02FC00B-SFTP2607C7-1PUR-A0300	1st end: M12x1 cable socket, IP67; 2nd end: free cable end	boot: black; jacket: green	3,0 m
L84503A0000	STX M12x1 CC X-cod. Cat.6$_A$	CS02FC00B-SFTP2607C7-1PUR-A0500	1st end: M12x1 cable socket, IP67; 2nd end: free cable end	boot: black; jacket: green	5,0 m
L84504A0000	STX M12x1 CC X-cod. Cat.6$_A$	CS02FC00B-SFTP2607C7-1PUR-A0750	1st end: M12x1 cable socket, IP67; 2nd end: free cable end	boot: black; jacket: green	7,5 m
L84505A0000	STX M12x1 CC X-cod. Cat.6$_A$	CS02FC00B-SFTP2607C7-1PUR-A1000	1st end: M12x1 cable socket, IP67; 2nd end: free cable end	boot: black; jacket: green	10,0 m

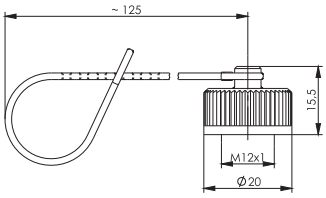

Order no.	Description	Remarks
H80030A0008	STX M12x1 plug protective cap with wrist strap	for D- and X-coded

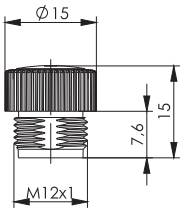

Order no.	Description	Remarks
H80030A0009	STX M12x1 socket protective cap	for D- and X-coded

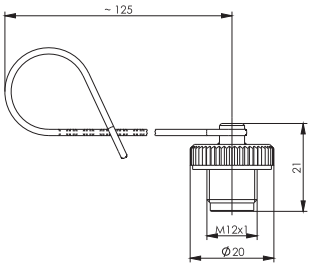

Order no.	Description	Remarks
H80030A0010	STX M12x1 socket protective cap with wrist strap	for D- and X-coded

10

Copper Cables in Bulk

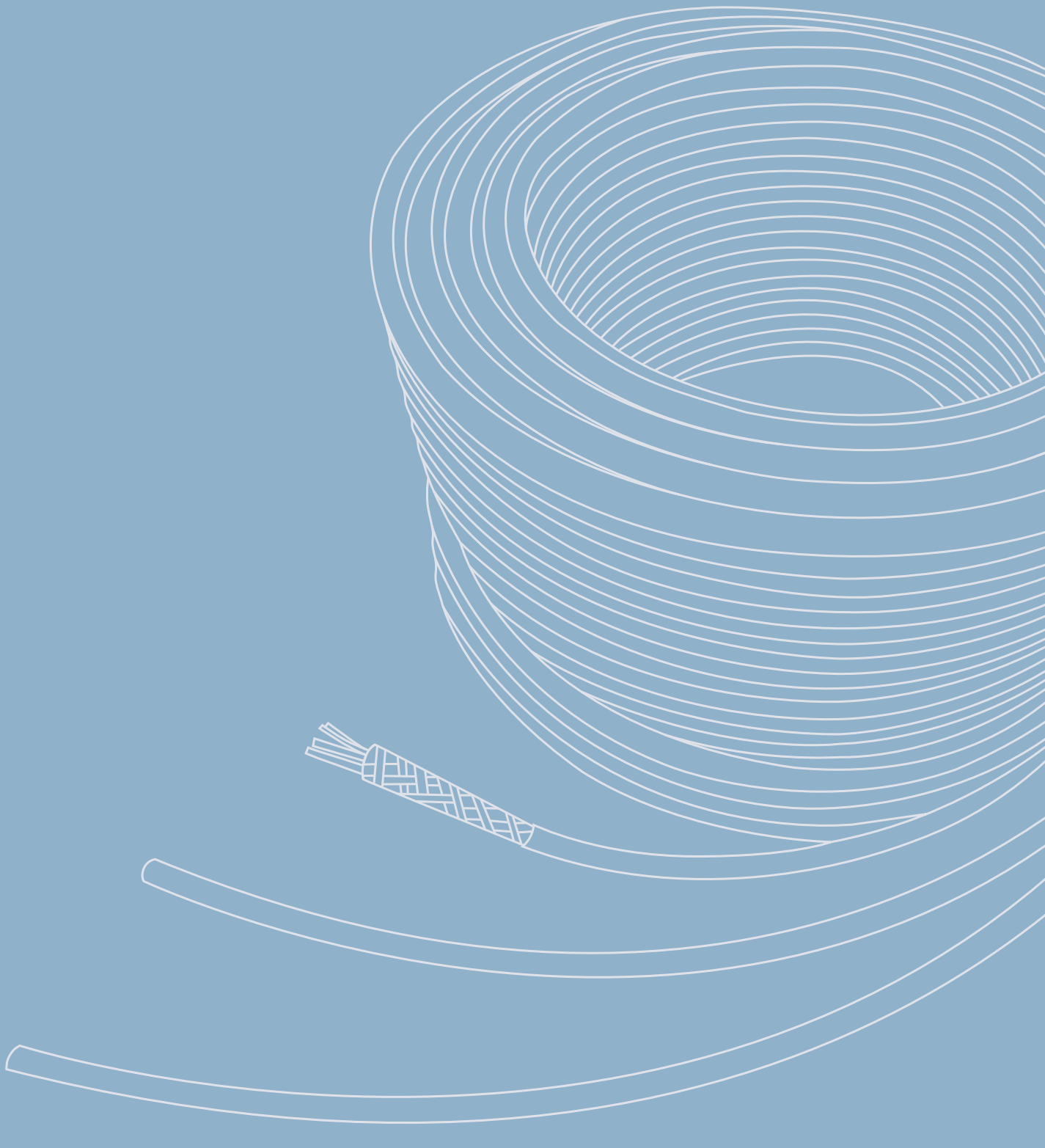

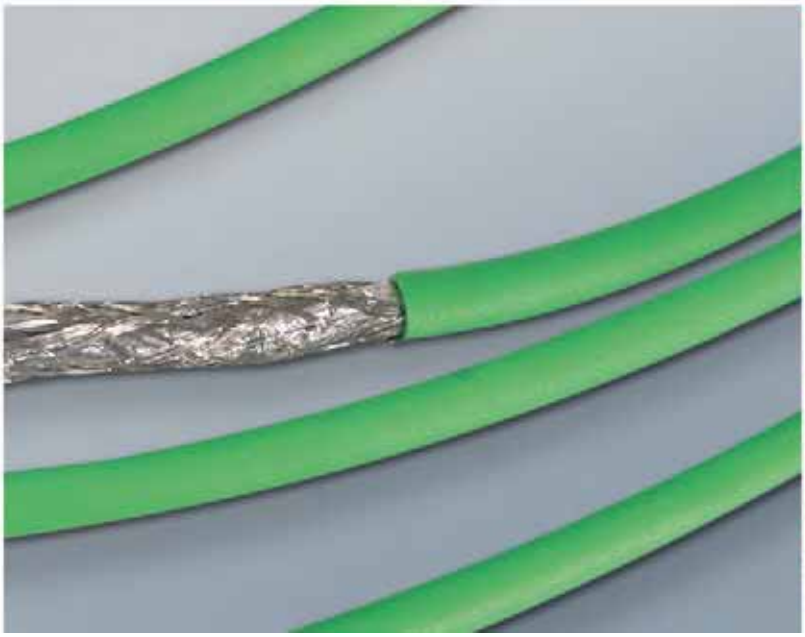

10 Copper Cables in Bulk

10.1 Copper Cables SF/UTP 228

10.2 Copper Cables S/FTP 229

For best connections Telegärtner offers shielded SF/UTP Cat.5 and S/FTP Cat.7 cables with PVC- or PUR-jacket with extended temperature range up to 85°C. The assortment includes installation and connection cables for connections exposed to intensive contamination with protection class IP67. These cables offer outstanding transmission characteristics with high power reserves and optimum protection against ambient influences by the use of particularly robust jacket materials.

	Copper Cable Cat.7 S/FTP AWG23/1	Copper Cable Cat.7 S/FTP AWG26/7; AWG27/7	Copper Cable Cat.6_A S/FTP AWG23/7
Mechanical Characteristics			
Wire	Cu wire Ø 0.56 mm	AWG26/7: Cu stranded Ø 0.48 mm (7 x 0.16 mm); AWG27/7: Cu stranded Ø 0.43 mm (7 x 0.14 mm)	Cu wire Ø 0.65 mm (7 x 0.22 mm)
Insulation	Foam PE Ø 1.4 mm	Foam PE Ø 1.4 mm	Foam PE Ø 1.6 mm
Pair shielding	Al-foil, outside conducting	Al-foil, outside conducting	Al-foil, outside conducting
Overall shielding	tin plated copper braid	tin plated copper braid	tin plated copper braid
Outer jacket	PUR, PE, MUD	PVC/PUR/LSZH	PVC
Jacket diameter	Ø 7,5 mm (PUR), Ø 8.4 mm (PE), Ø 9,6 mm (MUD)	Ø 6.2 mm ±0,2 mm (PVC/PUR); Ø 5.8 mm (LSZH)	Ø 8.8 mm ±0.2 mm
Climatic Characteristics			
UL	-	E344985 (PUR)	-
flame-retardant test	IEC 60332-1	IEC 60332-1	UL 444
	-	PVC type	FT4
Operating temperature in °C	-30° C to +75° C (PUR), -55° C to +75° C (PE), -40° C to +85° C (MUD)	PVC -40° C to +75° C; PUR -40° C to +85° C	PVC -40° C to +80° C

	Copper Cable Cat.5 SF/UTP AWG24/1	Copper Cable Cat.5 SF/UTP AWG26/7	Copper Cable Profinet Cat.5 SF/UTP
Mechanical Characteristics			
Wire	Cu wire Ø 0.51 mm	Cu stranded Ø 0.48 mm (7 x 0.16 mm)	Cu wire Ø 0.76 (7 x 0.25 mm)
Insulation	PE Ø 1.02 mm	PE Ø 0.95 mm	PE Ø 1.51 mm
Overall shielding	aluminum foil, outer conductive and tinned copper braid	aluminum foil, outer conductive and tinned copper braid	aluminum foil, outer conductive and tinned copper braid
Outer jacket	PVC/PUR	RAL 6018, PVC/PUR oil resistant	RAL 6018
Jacket diameter	Ø 6.5 mm ±0.2 mm	PVC Ø 5.6 mm ±0,2 mm; PUR Ø 5.8 mm ±0,2 mm	Ø 6.4 mm ±0.3
Climatic Characteristics			
UL	-	E344985 (PUR)	E344985
flame-retardant test	IEC 60332-1	IEC 60332-1	IEC 60332-1
	PVC type	PVC type	-
Operating temperature in °C	PVC -40° C to +75° C; PUR -40° C to +85° C	PVC -40° C to +75° C; PUR -40° C to +85° C	-40° C to +85° C

A big assortment of those cables can be found in our online-configurator. At www.telegaertner.com/ticnet users can choose the combination of cables and connectors with any custom-specific length for protection class IP20 or IP67.

10.1 Copper Cables SF/UTP

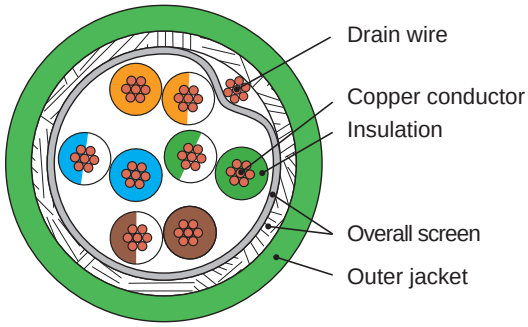

Order no.	Description	Remarks	Colour	UL listed
L02002C0067	SF/UTP 4x2xAWG26/7 Cat.5 PVC	305 m/1.000 ft. on 1-way drum	RAL 6018	-
L02002C0068	SF/UTP 4x2xAWG26/7 Cat.5 PUR	305 m/1.000 ft. on 1-way drum	RAL 6018	E344985

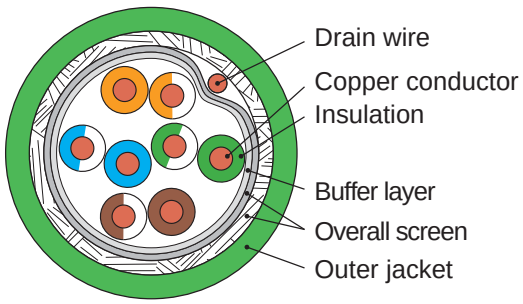

Order no.	Description	Remarks	Colour
L02002C0069	SF/UTP 4x2xAWG24/1 Cat.5 PVC	305 m/1.000 ft. on 1-way drum	RAL 6018
L02002C0070	SF/UTP 4x2xAWG24/1 Cat.5 PUR	305 m/1.000 ft. on 1-way drum	RAL 6018

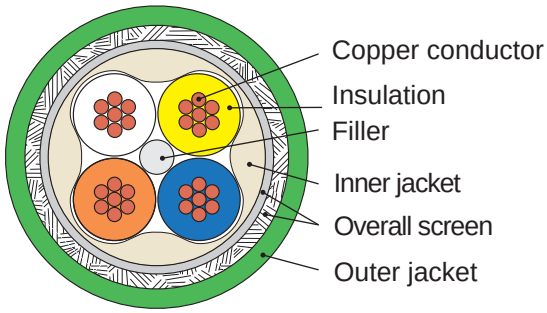

Order no.	Description	Remarks	Colour	UL listed
L02002A0207	PROFINET Type C SF/UTP 2x2xAWG22/7 Cat.5 PUR	305 m/1.000 ft. on 1-way drum	RAL 6018	E344985

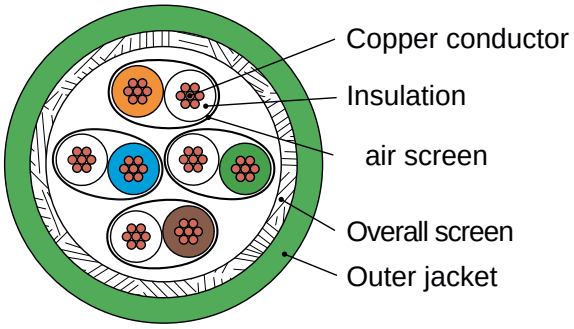

Order no.	Description	Remarks	Colour	UL listed
L02002C0074	STX 600 4x2xAWG 26/7 Cat.7 PUR	305 m/1.000 ft. on 1-way drum	RAL 6018	E344985
L02002C0072	STX 600 4x2xAWG 27/7 Cat.7 PUR	305 m/1.000 ft. on 1-way drum	RAL 6018	E344985

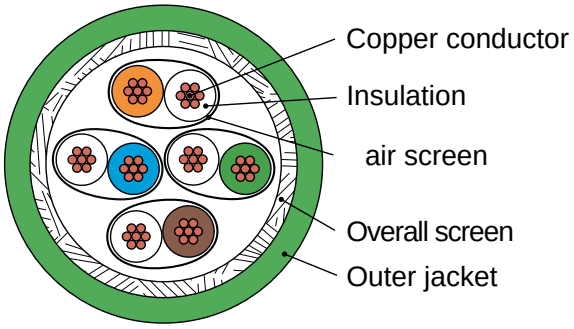

Order no.	Description	Remarks	Colour
L02002C0071	S/FTP 4x2xAWG 27/7 Cat.7 PVC	305 m/1.000 ft. on 1-way drum	RAL 6018
L02002C0073	S/FTP 4x2xAWG 26/7 Cat.7 PVC	305 m/1.000 ft. on 1-way drum	RAL 6018

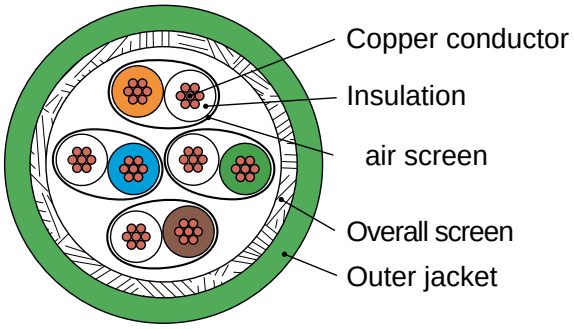

Order no.	Description	Remarks	Colour
L02002A0190	S/FTP 4x2xAWG23/7 Cat.6_A PVC	500 m drum, PROFINET Type B	RAL 6018

10.2 Copper Cables S/FTP

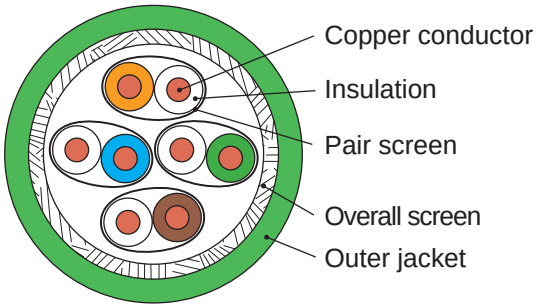

Order no.	Description	Structure	Category	Colour	Length
L02002A0143	STX 900	S/FTP 4x2xAWG23/1 PUR	Cat.7	green	500 m

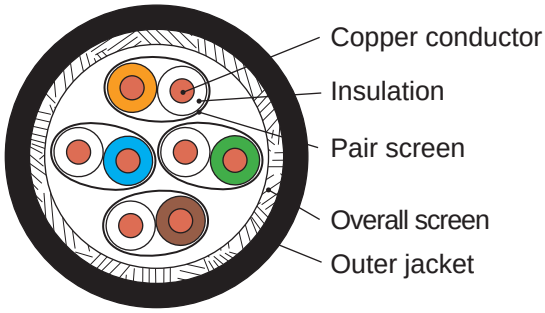

Order no.	Description	Structure	Category	Colour	Length
L02002A0146	AMJ 900	S/FTP 4x2xAWG23/1 PE	Cat.7	black	500 m

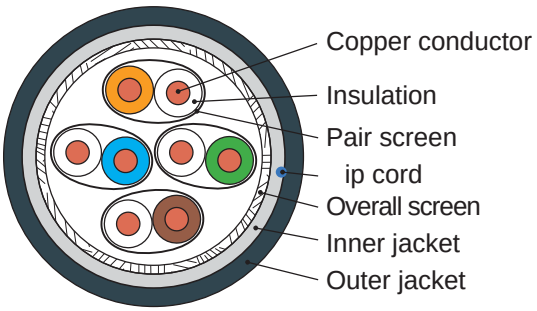

Order no.	Description	Structure	Category	Colour	Length
L02002A0175	TOC 900	S/FTP 4x2xAWG 23/1 FRNC/C	Cat.7	black	500 m

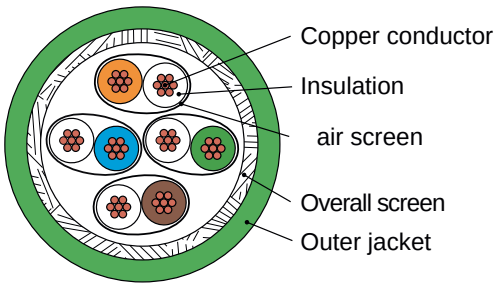

c UL us

Order no.	Description	Structure	Category	Colour	Length	UL listed
L02002A0061	AMJ600	S/FTP 4x2xAWG27/7 LSZH	Cat.7	grey	305 m	E344985
L02002B0061	AMJ600	S/FTP 4x2xAWG27/7 LSZH	Cat.7	green	305 m	E344985
L02002C0061	AMJ600	S/FTP 4x2xAWG27/7 LSZH	Cat.7	red	305 m	E344985
L02002D0061	AMJ600	S/FTP 4x2xAWG27/7 LSZH	Cat.7	blue	305 m	E344985
L02002E0061	AMJ600	S/FTP 4x2xAWG27/7 LSZH	Cat.7	yellow	305 m	E344985
L02002F0061	AMJ600	S/FTP 4x2xAWG27/7 LSZH	Cat.7	black	305 m	E344985

11

IP44 Outlets

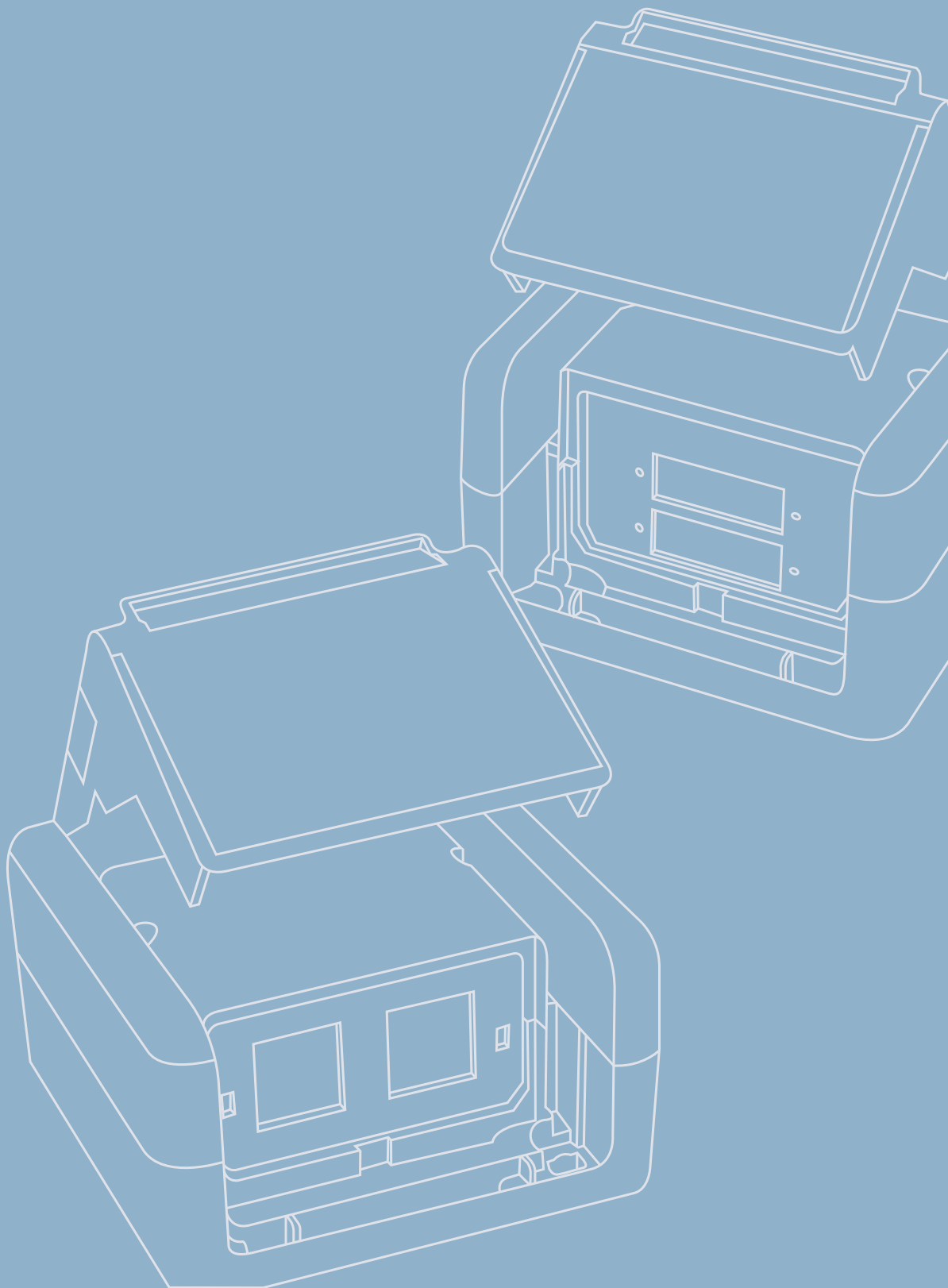

11 IP44 Outlets

11.1 RJ45 Outlet IP44 AP 233

11.2 FO Outlet IP44 AP 235

The AMJ Modules and Couplers which are commonly used in the office world are effectively protected against ingress of solid impurities measuring more than 1 mm in diameter, as well as against water jets from all directions, by a housing with protection class IP44. With its compact size of 75x86x58 mm, the housing can not only accommodate up to two data outlets, but is also unbreakable. The grey housing is available with one or two cable entries. A splash-proof transparent label (21x59 mm) permits identification of the ports. The Terminal Outlet (TO) is completed tool-less by snapping in the corresponding modules and coupler into the single or double gang inserts. The SC Duplex adaptor can also additionally be mounted with screws.

Performance Characteristics

- degree of Protection IP44
- little space required for two data outlets (dimensions: 75x86x58 mm)
- unbreakable housing
- either single or double gang inserts for AMJ Modules, Couplers, SC duplex adaptors
- port identification via splash-proof, transparent label
- spring-laoded hinged cover for easy access to the jacks
- tool-free mounting (snap-in) of the AMJ Modules and Couplers
- either snapping and/or screwing SC Duplex adaptors

RJ45 Outlet IP44 AP 11.1

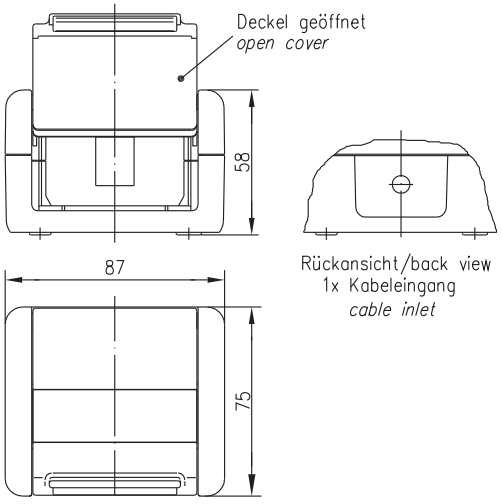

AMJ-S
AMJ

Order no.	Short name	Type	Remarks	Series	Colour
H02000A0069	Outlet IP44 AP	single gang surface mounting box, without module/coupler	for AMJ/ UMJ Modules and Coupler	AMJ-S; AMJ Module K; AMJ Coupler K; UMJ Module K; UMJ Coupler K	grey

11.1

11.1 RJ45 Outlet IP44 AP

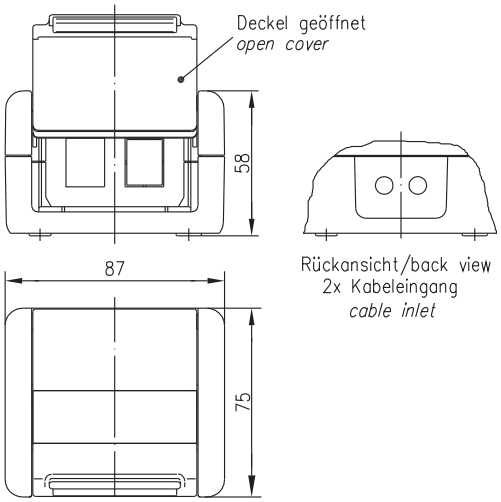

AMJ-S
AMJ

Order no.	Short name	Type	Remarks	Series	Colour
H02000A0070	Outlet IP44 AP	Double gang surface mounting box, without Module/Coupler	for AMJ/ UMJ modules	AMJ-S; AMJ Module K; AMJ Coupler K; UMJ Module K; UMJ Coupler K	grey

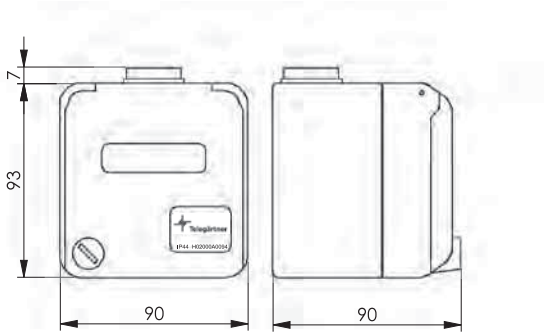

AMJ-S
AMJ

Order no.	Short name	Short name	Series
H02000A0094	Outlet IP44 with lock	Double gang surface mounting box, without Module/Coupler	AMJ-S Module; AMJ Module K; UMJ Module K
H01011A0051	Cable gland M25x1,5; 2x8	for 2 cables 3-8 mm, grey	

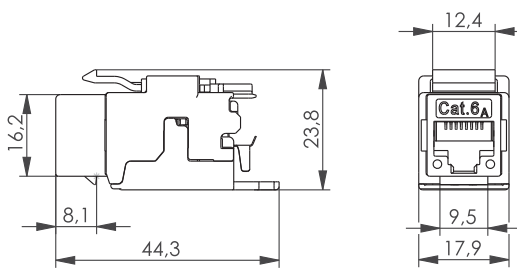

Cat.6A
AMJ
REAL-TIME RE-EMBEDDED

Order no.	Short name	Remarks	Mount. dim.
J00029K0036	AMJ Module K Cat.6_A T568A	tool-free connectivity, suitable for RJ45/11/12 plugs	Z121
J00029A0077	AMJ Module K Cat.6_A T568B	tool-free connectivity, suitable for RJ45/11/12 plugs	Z121

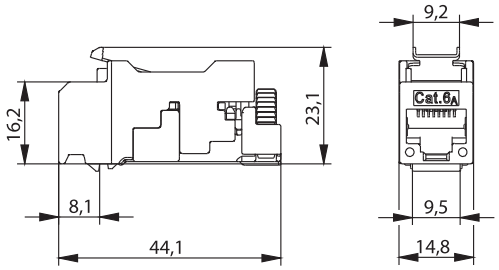

Order no.	Short name	Remarks	Mount. dim.
J00029A2000	AMJ-S Module Cat.6_A T568A	tool-free connectivity, suitable for RJ45/11/12 plugs	Z121
J00029A2001	AMJ-S Module Cat.6_A T568B	tool-free connectivity, suitable for RJ45/11/12 plugs	Z121

FO Outlet IP44 AP 11.2

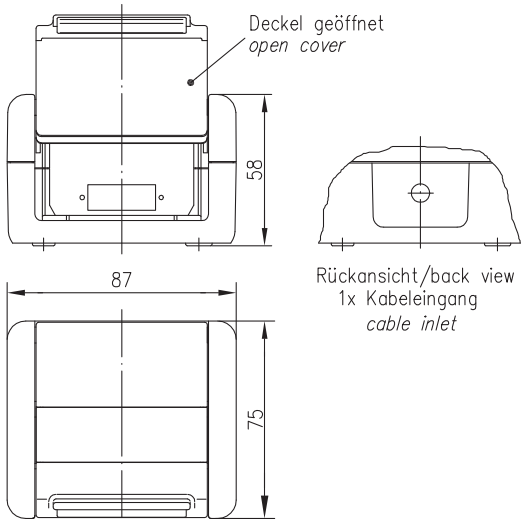

Order no.	Short name	Remarks	Mount. dim.
H82000A0012	Outlet IP44 AP	for 1xSC Duplex adaptor	Z70

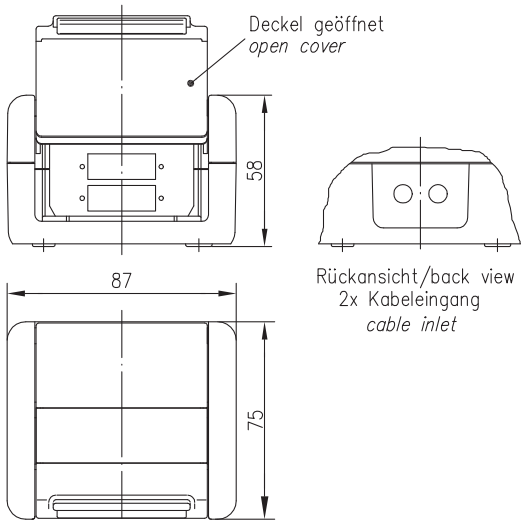

Order no.	Short name	Remarks	Mount. dim.
H82000A0013	Outlet IP44 AP	for 2xSC Duplex adaptors	Z70

12

Termination Tools

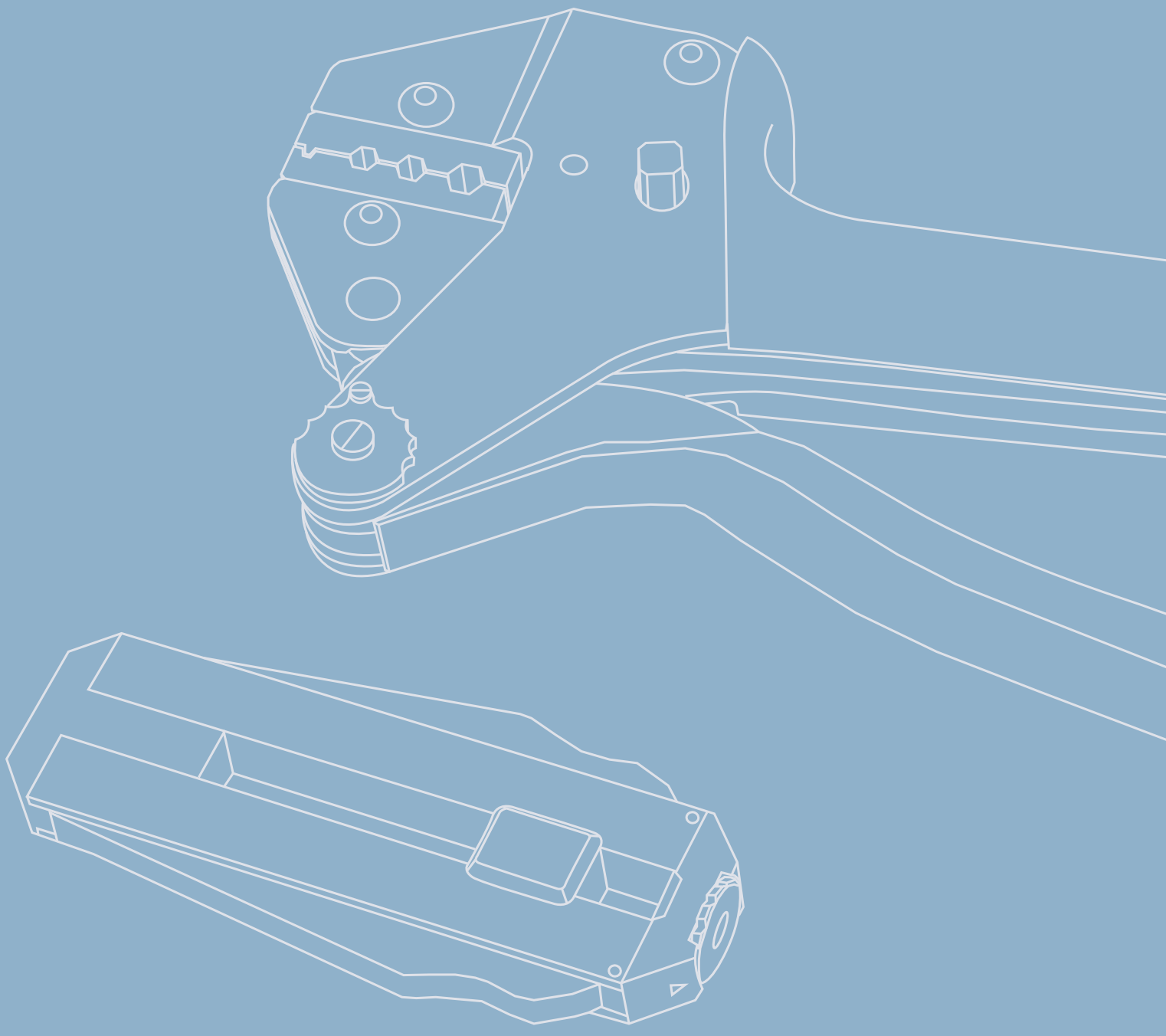

12 Termination Tools

12.1 FO Tool Set 239
12.2 Accessories for FO Tool Set 239
12.3 Termination Tool Set POF 244
12.4 Other Termination Tools 245

For secure and steady termination on-site, Telegärtner offers a wide assortment of auxiliary means and tools. For terminating a FO connector it is necessary to have tools for preparing the fibers, a crimp tool, polishing materials and a microscope for checking the connector end face. Supplementary sets are available for the termination of POF and LC connectors.

FO Tool Set 12.1

Order no.	Description	Remarks
N84000A0000	Tool Set Fast Cure for FO Connectors, Basic Equipment	Content: • crimp tool for ST and SC connectors • kevlar cutter • stripping tool for jacket, primary- and secundary coating • knife • light rod with adaptor for connector 2,5 mm ferrules • cleaning tissues • polishing pads • polishing foils • saphire scribe • Microscope 100x and 200xConversion Eyepiece • polishing discs for connector 2,5 mm ferrules • polishing and cleaning fluid • Fast Cure Adhesive Set

Accessories for FO Tool Set 12.2

Order no.	Description	Remarks
N84001A0000	Supplementary Set LC (for GOF and PCF)	Crimp insert, Polishing disc, Microscope Conversion Eyepiece, Light rod

12.2

12.2 Accessories for FO Tool Set

Order no.	Description	Remarks
N84001A0001	Supplementary Set SC (for POF)	Crimp Insert, Stripping Tool Knife, abrasive paper, polishing foil, polishing pad

Order no.	Description	Remarks
N80000A0001	Crimp tool with insert for ST, SC and IP67 plugs	included in Tool Case Fast Cure

Order no.	Description	Remarks
N81001A0000	Crimp insert for ST/SC and IP67 plugs	wrench size: 3.4/4.52, 3.65/4.52 and 8.23
N81001A0001	Crimp insert for ST/SC POF and IP67 plugs	wrench size: 3.23, 4.52 and 8.23
N01001A0061	Crimp insert for LC and IP67 plugs	wrench size: 3.05/3.24 and 8.23

Order no.	Description	Remarks
N04001A0032	Kevlar scissors	included in Tool Case Fast Cure

Order no.	Description	Remarks
N04001A0033	Cutter	included in Tool Case Fast Cure

Order no.	Description	Remarks
N04001A0063	Cable Stripping Tool	included in Tool Case Fast Cure

Order no.	Description	Remarks
N04001A0031	Stripping tool for jacket and primary coating	included in Tool Case Fast Cure

Order no.	Description	Remarks
N04001A0062	Stripping tool 0.25 - 0.8 mm for secondary coating	included in Tool Case Fast Cure

Order no.	Description	Remarks
Q00051A0006	Fast Cure Adhesive Set	for approx. 250 connectors ST, SC, LC; included in Tool Case Fast Cure

12.2 Accessories for FO Tool Set

Order no.	Description	Remarks
N04001A0018	Light rod for connectors 2.5 mm dia.	incl. batteries; included in Tool Case Fast Cure

Order no.	Description	Remarks
N04001A0024	Cleaning tissues	alcohol-soaked, set with 20 pcs.; included in Tool Case Fast Cure
N04001A0064	Cleaning tissues	dry, set with 100 pcs.; included in Tool Case Fast Cure

Order no.	Description	Remarks
N04001A0048	Polishing disc for ST and SC plugs	stainless steel, included in Tool Case Fast Cure

Order no.	Description	Remarks
N04001A0059	Polishing pad Ø 127 mm for prior- and final polishing steps	included in Tool Case Fast Cure

Order no.	Description	Remarks
N00100A0010	Polishing foils 30 µm, Ø 127 mm	50 pcs.; included in Tool Case Fast Cure
N00100A0017	Polishing foils 3 µm, Ø 127 mm, Diamond	5 pcs.; included in Tool Case Fast Cure
N00100A0011	Fine Polishing foils for Singlemode	5 pcs.; included in Tool Case Fast Cure
N00100A0018	polishing fois 0,5 µm, Ø 127 mm, diamond	5 pieces

Order no.	Description	Remarks
N04001A0026	Polishing and cleaning liquid	included in Tool Case Fast Cure

Order no.	Description	Remarks
N04001A0017	Cleaving tool	for fiber cutting; included in Tool Case Fast Cure

Order no.	Description	Remarks
N04001A0039	Microscope, 100x	incl. batteries; included in Tool Case Fast Cure

Order no.	Description	Remarks
N04001A0040	200x Microscope Conversion Eyepiece	included in Tool Case Fast Cure

Order no.	Description
N04001A0046	Stripping tool for jacket, secondary and primary coating

Order no.	Description	Remarks
N04001A0034	Split-tip cleaning swabs	With cleaning fluid, set with 20 pcs.

12.2 Accessories for FO Tool Set

Order no.	Description
N04001A0074	Cleaner for LC connectors
N04001A0073	Cleaner for ST, SC, FC connector
N04001A0082	Cleaner for MPO/MTP® connectors

Order no.	Description
N04001A0081	Fiber tester with adaptors for ferrules ST, SC, FC, LC for visual fault locating in FO links

12.3 Termination Tool Set POF

Order no.	Description
N84001A0002	Termination Tool Set POF

Order no.	Description	Remarks
N00100A0016	Polishing foil set for POF	10 pcs. P1500 and 1µ each
N04001A0067	Polishing disc for POF connectors 2.5 dia.	plastic

Other Termination Tools 12.4

Order no.	Short name	Type
N00000A0013	Plier wrench 1 3/8 inch	auxiliary tool for AMJ, STX and UMJ Module; MFP8/UFP8 assembly, 2 in 1 tool: gripper and spanner

Order no.	Short name	Type
N00000B0020	Parallel pressing tool	auxiliary tool for AMJ, UMJ, STX Module and MFP8/UFP8 plug assembly

Order no.	Short name	Type
N00001A0002	Crimp Tool Professional (for frequent use) with insert for shielded MP8(8) FS plug; diameter of screen crimp die=5.5 mm; for cable diameter=5.5 - 6.2 mm; life ≥ 10.000 crimping operations	for MP8(8) FS plug (J80026A0000, J80026A0001, J00026A0165, J80026A0002, J00026A0165)
N01001A0019	Crimp insert for crimping tool Ø = 6.4 mm, for cable Ø = 5.5 - 7.3 mm	

12.4

12.4 Other Termination Tools

Order no.	Short name	Type
N80090A0000	Dismantle tool for copper cable	incl. knives

Order no.	Short name	Type
N80050A0000	Screwdriver for central screwed bulkhead variant 4	for bulkhead variant 4

Order no.	Short name
N80050A0001	Torque spanner 0.6 Nm, AF 18, for M12x1 X-coded cable plug
N80050A0002	Torque spanner 0.6 Nm, AF 13, for M12x1 X-coded connection cable

13

Mounting Dimensions

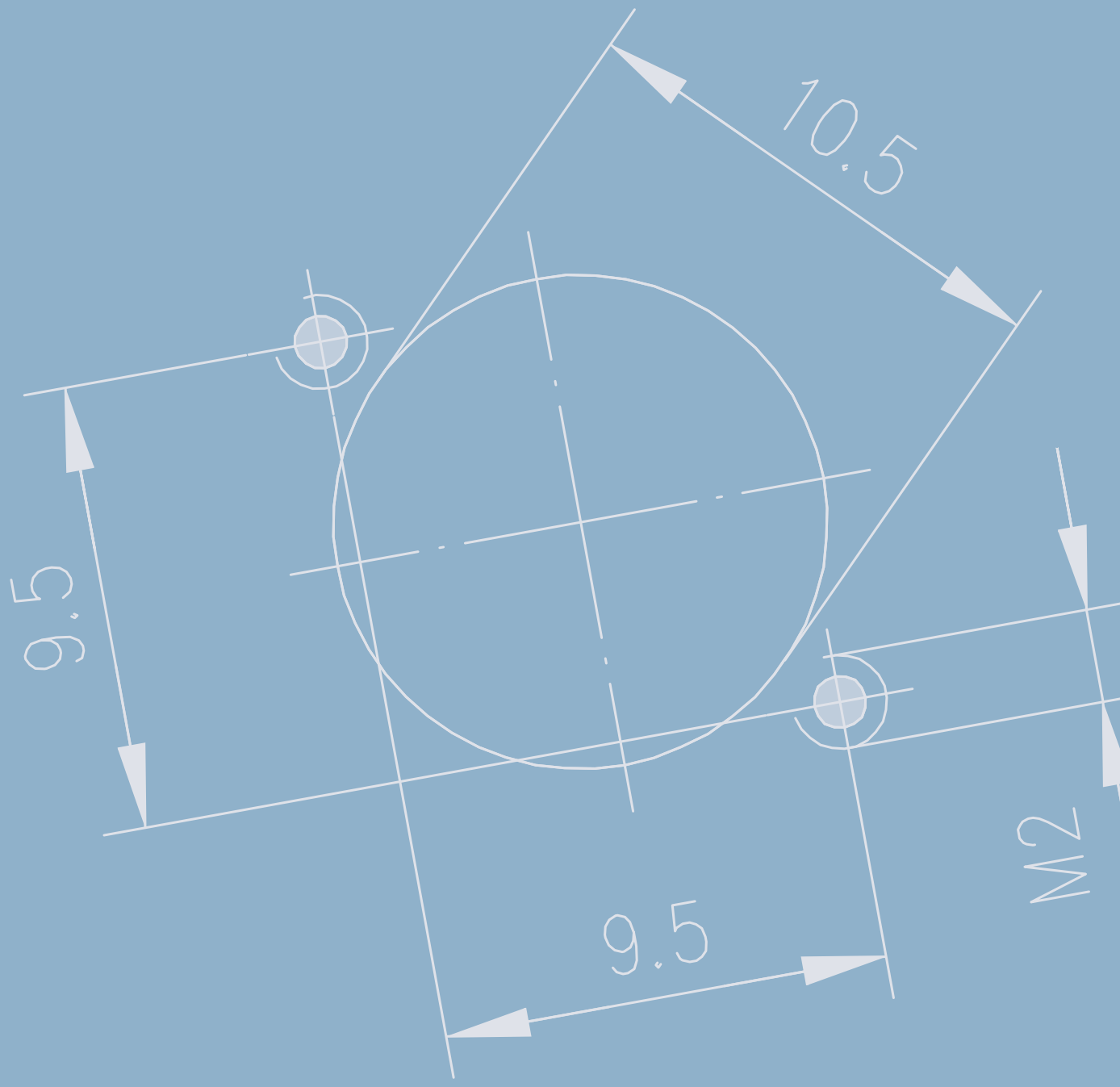

13 Mounting Dimensions

Telegärtner is keen to facilitate your product selection, and to offer practical support to you in your daily involvement. For this reason, on the following pages you will find all the mounting dimensions shown against diverse products as a Panel Mounting Code (e. g. Z70), as a kind of „working tool".

Z64

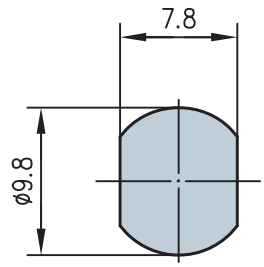

Z66

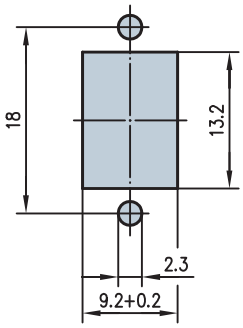

Z70

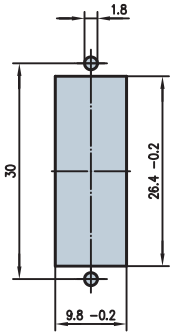

Z77

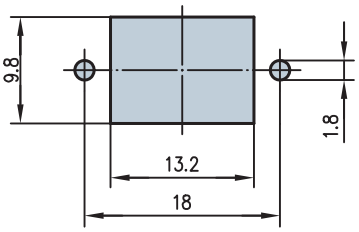

Z93

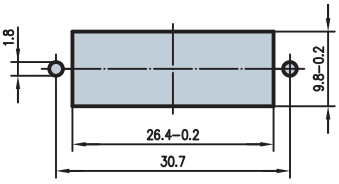

Z99

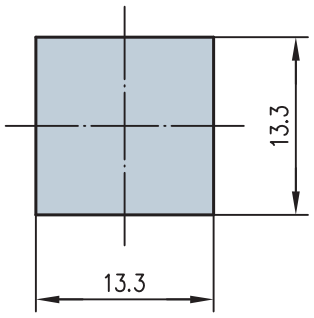

Z115

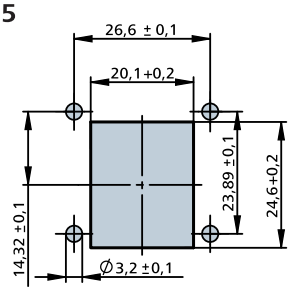

wall thickness 5mm max.

Z121

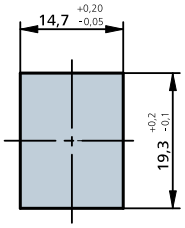

wall thickness 1,6 ± 0,05 mm

Z122

central mounting

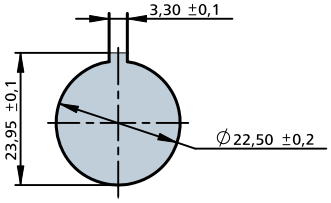

wall thickness 1mm till 5mm

Z123

4 hole mounting

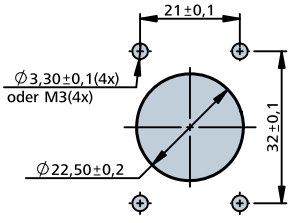

wall thickness >1mm

Z124

central mounting

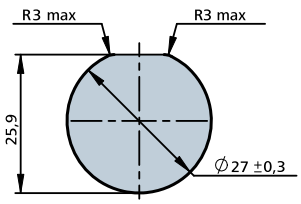

wall thickness 1mm till 3mm

Z125

4 hole mounting

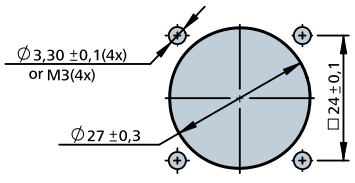

wall thickness >1mm

Z126

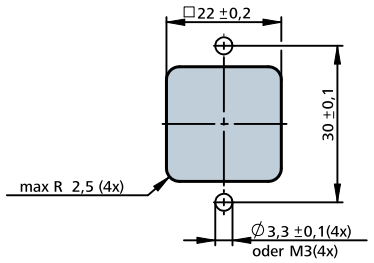

wall thickness >1mm

Z129

central mounting

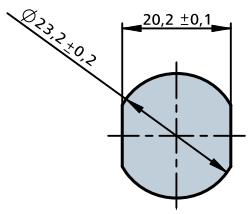

wall thickness 1mm till 5mm

Z132

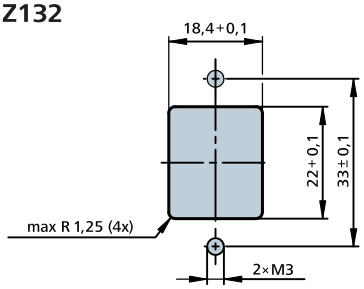

wall thickness >1mm

Z133

central mounting

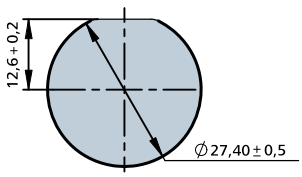

wall thickness 1mm to 5mm

Z138

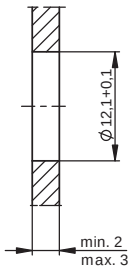

Z139

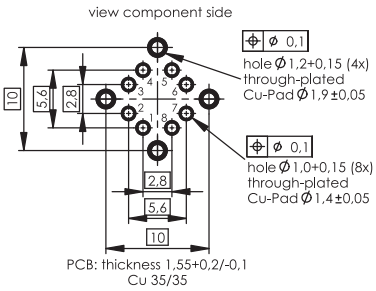

Z140

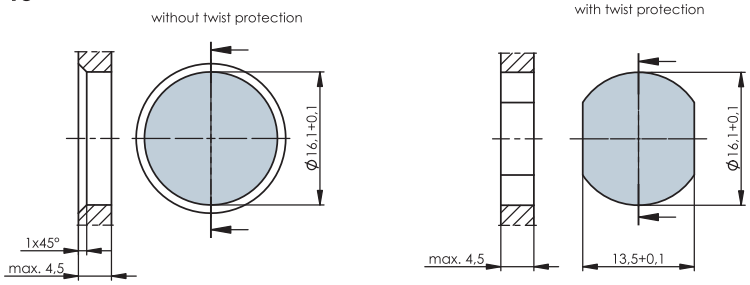

Z142

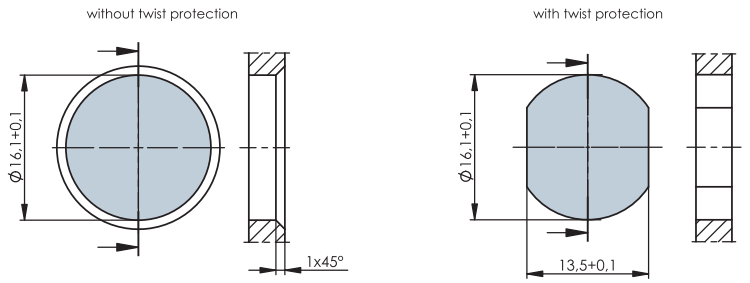

Z143

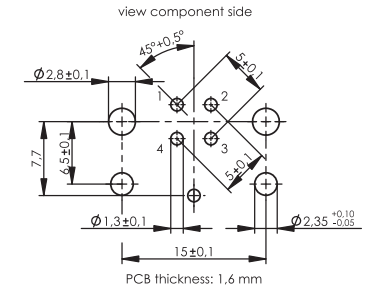

Z144

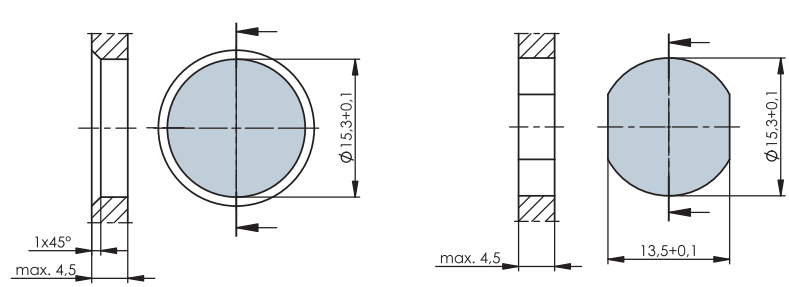

Z145

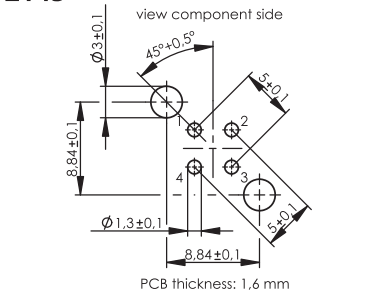

Z146

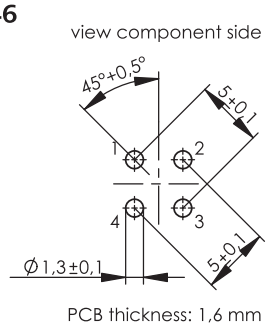

Z147

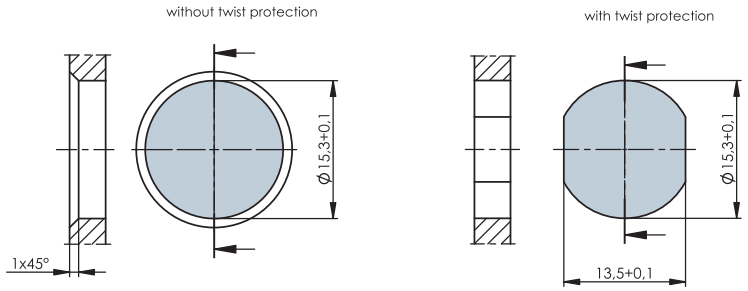

Z157

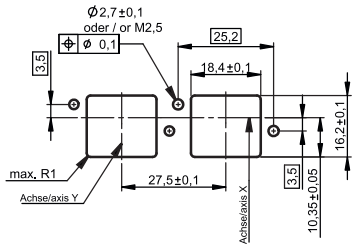

Z158

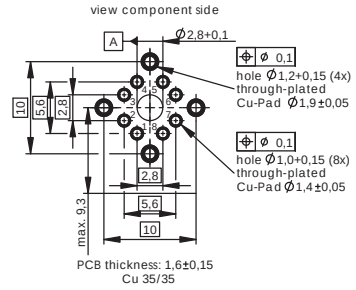

Z159

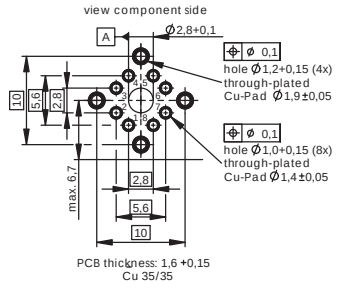

14

Index of Order Numbers

14 Index of Order Numbers

B
B00010A0033..... 213
B00010A0034..... 213
B00012A0018..... 181
B00042A0101.... 180,
..... 209
B00042A0102.... 180,
..... 209
B00042A0103.... 180,
..... 209
B00042A0104.... 180,
..... 209
B00042A0105.... 180,
..... 209
B00042A0107.... 180,
..... 209
B00042A0159.... 180,
..... 209
B00080A0089..... 169
B00080A0090..... 170
B00080B0089..... 169
B00080B0090..... 170
B00080C0089..... 169
B00080C0090..... 170
B00080D0089 169
B00080D0090 170
B00080E0089..... 169
B00080E0090..... 170
B00080F0089..... 169
B00080F0090..... 170
B01012A0033..... 148
B01012A0034..... 148
B01012A0035..... 148
B01012A0036..... 148
B01012A0037..... 148
B01012A0038..... 148
B01012A0039..... 148
B01012A0040..... 148
B01012A0041..... 148
B01012A0042..... 148
B06013A0010..... 60
F
F00020A2130..... 173
F00020A2131..... 173
F00020A2132..... 173
F00020A2133..... 173
F00020A2134..... 173
F00020A3130..... 174
F00020A3131..... 174
F00020A3132..... 174
F00020A3133..... 174
F08000A0002..... 150
F08000A0003..... 64
F08000A0008..... 151
F08000A0014..... 64
F08000A0017..... 64
F80073A0000..... 94,
..... 108
F80073A0001..... 94,
..... 108
F80074A0000.... 100,
..... 113, 144
F80074A0001.... 100,
..... 113,144
F80083A0004..... 93,
..... 107
F80083A0005..... 93,
..... 107
F80083A0006..... 93,
..... 107
F80083A0007..... 93,
..... 107
F80084A0000.... 100,
..... 112
F80084A0001.... 100,
..... 112
H
H01000A0288.... 151
H01011A0037 ... 148,
..... 151
H01011A0043.... 148
H01011A0051.... 234
H01012A0044.... 148
H01012A0048.... 148
H01012A0050 ... 131,
..... 142,151
H02000A0069.... 233
H02000A0070.... 234
H02000A0094.... 234
H02025A0069.... 152
H02025A0070.... 152
H02025A0097.... 152
H02025A0112.... 152
H02025A0113.... 152
H02025A0114.... 152
H02025A0115.... 152
H02025A0116..... 60
H02025A0137.... 152
H02025A0155.... 152
H02025A0167..... 51
H02025A0171..... 51
H02025A0199..... 52
H02025A0220..... 51
H02025A0234..... 52
H02025A0236..... 50
H02025A0241..... 51
H02025A0278.... 152
H02025A0281.... 152
H02025A0286.... 152
H02025A0293.... 152
H02025A0317..... 60
H02025A0322.... 152
H02025A0328.... 152
H02025A0329.... 152
H02025A0330.... 152
H02025A0331.... 152
H02025A0332.... 152
H02025A0333.... 152
H02025A0334.... 152
H02025A0336.... 152
H02025A0343..... 60
H02025A0349.... 152
H02025A0350.... 152
H02025A0366.... 152
H02025A0368.... 152
H02025A0533.... 152
H02030A0000..... 57
H02030A0001..... 57
H02030A0008..... 57
H02030A0009..... 57
H02030A0016..... 56
H02030A0018..... 56
H02030A0019..... 56
H02030A0021..... 56
H02030A0022..... 56
H02030A0034..... 57
H02030A0491..... 57
H02030A0492..... 57
H02030A0554..... 58
H02030A0590..... 57
H02030A0594..... 58
H02030A0608..... 56
H02030A0609..... 56
H02030A0610..... 56
H02030E0000..... 58
H02030E0001..... 58
H02030E0008..... 58
H02030E0009..... 58
H02030E0034..... 58
H02030E0491..... 59
H02030E0492..... 59
H02030E0554..... 59
H02030E0590..... 59
H02030E0594..... 59
H02030F0000..... 58
H02030F0001..... 58
H02030F0008..... 58
H02030F0009..... 58
H02030F0034..... 58
H02030F0491..... 59
H02030F0492..... 59
H02030F0590..... 59
H02030G0008..... 58
H02030G0009..... 58
H02030G0034..... 58
H02030G0491..... 59
H02030G0492..... 59
H02030G0590..... 59
H02030K0000..... 58
H02030K0001..... 58
H02030K0008..... 58
H02030K0009..... 58
H02030K0034..... 58
H02030K0491..... 59
H02030K0492..... 59
H02030K0590..... 59
H02030M0008..... 57
H02030M0009..... 57
H02030M0016..... 56
H02030M0019..... 56
H02030M0022..... 56
H02030M0034..... 57
H02030M0491..... 57
H02030M0492..... 57
H02030M0590..... 57
H02030M0608..... 56
H02030M0609..... 56
H02030M0610..... 56
H02030T0008..... 57
H02030T0009..... 57
H02030T0016..... 56
H02030T0019..... 56
H02030T0022..... 56
H02030T0034..... 57
H02030T0491..... 57
H02030T0492..... 57
H02030T0590..... 57
H02030T0608..... 56
H02030T0609..... 56
H02030T0610..... 56
H02030V0008..... 57
H02030V0009..... 57
H02030V0016..... 56
H02030V0019..... 56
H02030V0022..... 56
H02030V0034..... 57
H02030V0491..... 57
H02030V0492..... 57
H02030V0590..... 57
H02030V0608..... 56
H02030V0609..... 56
H02030V0610..... 56
H02050A0004.... 145
H02050A0006.... 146
H02050A0008.... 147
H02050A0010.... 146
H02050A0013.... 147
H02050A0097 ... 130,
..... 142
H02050A0190.... 149
H02050A0191.... 149
H02050A0192.... 149
H02050A0193.... 149
H02050A0194.... 149
H02050A0195.... 149
H02050A0196.... 149
H02050A0197.... 149
H02050A0198.... 149
H02050A0199.... 149
H02050A0200.... 149
H02050A0201.... 149
H02050A0205.... 149
H02050A0229.... 148
H02050A0231.... 148
H02050A0246.... 149
H02050A0247.... 149
H02050A0248.... 149
H02050A0279.... 150
H02050A0280.... 150
H02050A0281.... 150
H02050A0282.... 150
H02050A0283.... 150
H06000A0055..... 64
H06000A0065..... 71
H06000A0074.... 158
H06000B0045..... 70
H10000A0000..... 60
H60030A0000.... 163
H60030A0001.... 163
H80030A0000..... 95
H80030A0001.... 109
H80030A0002.... 120
H80030A0003.... 135
H80030A0004.... 101
H80030A0005.... 114
H80030A0006.... 123
H80030A0007.... 139
H80030A0008.... 223
H80030A0009.... 223
H80030A0010.... 223
H82000A0000.... 115
H82000A0002.... 115
H82000A0003.... 124
H82000A0005.... 124
H82000A0006.... 102
H82000A0008.... 102
H82000A0012.... 235
H82000A0013.... 235
H82000A0014..... 68
H82000A0015..... 68
H82000A0018..... 69
H82000A0019..... 69
H82000A0020..... 69
H82000A0021..... 69
H82000A0022..... 69
H82000A0023..... 70
H82000A0024..... 69
H82050A0001..... 63
H82050A0002..... 64
H82050A0005..... 64
H82050E0001..... 65
H82050E0002..... 65
H82050E0003..... 65
H82050E0005..... 65
H82050E0007..... 65
H82050E0101..... 65
H82050E0102..... 65
H82050E0105..... 65
H82050F0001..... 65
H82050F0002..... 65
H82050F0005..... 65
H82050F0007..... 65
H82050F0101..... 65
H82050F0102..... 65
H82050F0105..... 65
H82050G0001..... 65
H82050G0002..... 65
H82050G0005..... 65
H82050G0007..... 65
H82050G0101..... 65
H82050G0102..... 65
H82050G0105..... 65
H82050K0001..... 65
H82050K0002..... 65
H82050K0005..... 65
H82050K0007..... 65
H82050K0101..... 65
H82050K0102..... 65
H82050K0105..... 65
H82050S0001..... 63
H82050S0002..... 64
H82050S0003..... 64
H82050S0005..... 64
H86000A0000.... 100
H86000A0001.... 101
H86000A0002.... 113
H86000A0003.... 122
H86000A0008.... 113
H86010A0000..... 94
H86010A0001.... 119
H86010B0000..... 95
H86011A0000.... 169
H86011A0001.... 169
H86011A0002.... 169
H86011A0003.... 169
H86011A0004.... 169
H86011A0005.... 169
H86011A0006.... 169
H86011A0007.... 143
H86011A0010..... 94
H86011A0011.... 108
H86011B0010..... 95
H86011B0011.... 108
J00020A0436..... 129
J
J00020A0437..... 130
J00020A0480..... 126
J00020A0481..... 126
J00020A0482..... 127
J00020A0483..... 127
J00023A0205..... 71
J00023A0206..... 71
J00026A0150..... 126
J00026A0165..... 169
J00026A2000..... 171
J00026A2001..... 171
J00026A2002..... 171
J00026A2003..... 171
J00026A2004..... 171
J00026A2110..... 171
J00026A2111..... 171
J00026A2112..... 171
J00026A2113..... 171
J00026A2114..... 171
J00026A3000..... 173
J00026A3001..... 173
J00026A3002..... 173
J00026A3003..... 173
J00026A3110..... 173
J00026A3111..... 173
J00026A3112..... 173
J00026A3113..... 173
J00026A4000..... 171
J00026A4001..... 171
J00026A4002..... 171
J00026A4003..... 171
J00026A4004..... 171
J00026A4110..... 172
J00026A4111..... 172
J00026A4112..... 172
J00026A4113..... 172
J00026A4114..... 172
J00026A5000..... 172
J00026A5001..... 172
J00026A5002..... 172
J00026A5003..... 172
J00026A5004..... 172
J00026A5110..... 172
J00026A5111..... 172
J00026A5112..... 172
J00026A5113..... 172
J00026A5114..... 172
J00029A0039..... 128
J00029A0040..... 127
J00029A0042..... 128
J00029A0061..... 129
J00029A0077..... 234
J00029A2000..... 235
J00029A2001..... 235
J00029A2110..... 52
J00029A2111..... 52
J00029A3110..... 52
J00029A3111..... 52
J00029B0061..... 53
J00029B0077..... 53
J00029K0036..... 128
J00029K0036..... 234
J00029K0051..... 129
J00029L0036..... 53
J00029L0051..... 53
J02023A0026..... 55
J02023A0033..... 54
J02023A0034..... 54
J02023A0035..... 54
J02023A0039..... 54
J02023A0040..... 54
J02023K0025..... 55
J02023K0027..... 54
J02024A0007..... 53
J02024C0007..... 53
J08010A0005..... 177
J08010A0007..... 177
J08010A0008..... 177
J08010A0016..... 177
J08010A0035..... 177
J08010A0036..... 177
J08010A0056..... 177
J08011A0002..... 178
J08011A0003..... 178
J08011A0014..... 178
J08011A0017..... 178
J08051A0012..... 184
J08070A0000..... 182
J08070A0002..... 182
J08070A0009..... 182
J08070A0010..... 182

Order no.	Page
J08070A0033	182
J08070A0034	182
J08070A0043	182
J08070A0044	182
J08070A0055	182
J08070A0056	182
J08070A0057	182
J08070A0058	182
J08070A0059	182
J08071A0000	182
J08071A0002	182
J08071A0004	182
J08071A0005	183
J08071A0010	183
J08071A0017	182
J08071A0018	183
J08071A0019	183
J08071A0020	183
J08071A0021	183
J08071A0028	183
J08071A0029	183
J08071A0030	182
J08071A0031	183
J08071A0034	183
J08071A0042	183
J08071A0044	183
J08071A0048	182
J08071A0052	183
J08080A0001	179
J08080A0002	179
J08080A0005	179
J08080A0006	179
J08080A0016	179
J08080A0018	179
J08080A0036	179
J08080A0037	179
J08080A0043	179
J08080A0046	179
J08080A0047	179
J08080A0048	179
J08080A0051	179
J08080A0052	179
J08080A0053	179
J08081A0000	180
J08081A0002	181
J08081A0006	181
J08081A0010	180
J08081A0011	181
J08081A0014	180
J08081A0016	181
J08081A0017	181
J08081A0032	180
J08081A0034	181
J08081A0035	181
J08081A0036	180
J08081A0037	181
J08081A0038	181
J08081A0040	181
J08081A0041	181
J08082A0002	184
J08082A0007	184
J08082A0010	184
J08082A0012	184
J08083A0000	141
J08083A0001	141
J08083H0000	141
J08083H0001	141
J08084A0000	141
J08084A0001	141
J08084H0000	141
J08084H0001	141
J60020A0000	157
J60020A0002	157
J60020A0004	157
J60023A0000	158
J60026A0000	156
J60029A0000	158
J68070A0000	160
J68070A0001	160
J68070A0004	162
J68070A0005	162
J68070A0006	162
J68070A0007	162
J68070A0008	160
J68071A0000	160
J68071A0001	160
J68071A0004	161
J68071A0006	162
J68071A0007	163
J80020A0000	96
J80020A0001	96
J80020A0002	96
J80020A0003	96
J80020A0004	109
J80020A0005	109
J80020A0006	120
J80020A0007	120
J80020A0010	135
J80020A0011	136
J80020A0012	136
J80020A0013	136
J80020A0120	82
J80020A0121	83
J80020A0122	83
J80020A0221	79
J80020A0222	80
J80023A0000	67
J80023A0001	67
J80023A0002	67
J80023A0003	67
J80023A0004	67
J80023A0006	67
J80023A0007	67
J80023A0010	116
J80023A0011	116
J80023A0013	116
J80023A0014	116
J80023A0016	103
J80023A0017	103
J80023A0019	103
J80023A0020	103
J80026A0001	170
J80026A0002	92
J80026A0002	106
J80026A0002	119
J80026A0003	170
J80026A0004	92, 107,119
J80026A0005	88
J80026A0006	88
J80026A0007	88
J80026A0008	88
J80026A0009	89
J80026A0010	89
J80026A0011	89
J80026A0012	89
J80026A0013	105
J80026A0014	105
J80026A0015	105
J80026A0016	105
J80026A0017	117
J80026A0018	118
J80026A0019	133
J80026A0021	133
J80026A0045	170
J80026A0046	170
J80026A0047	170
J80026A0100	81
J80026A0200	78
J80029A0000	99, 111,122,143
J80029A0001	99, 111,122,143
J80029A0002	99, 111,122,143
J80029A0004	99, 111,122,144
J80029A0010	98, 111,121,143
J80029A0011	99, 111,122,144
J80029A0012	144
J80029A0013	99, 111,122
J80029A0100	85
J80029A0200	85
J80060A0000	86
J80120A0120	82
J80120A0220	79
J80220A0120	83
J80220A0220	80
J80320A0120	84
J80420A0120	84
J80520A0120	84
J80629A0200	85
J88073A0000	105
J88073A0001	105
J88073A0002	105
J88073A0003	105
J88073A0004	90
J88073A0005	90
J88073A0006	90
J88073A0007	90
J88073A0008	91
J88073A0009	91
J88073A0010	91
J88073A0011	91
J88073A0012	133
J88073A0014	133
J88074A0000	110
J88074A0001	110
J88074A0002	97
J88074A0003	97
J88074A0004	97
J88074A0005	97
J88074A0006	137
J88074A0007	137
J88074A0008	138
J88074A0009	138
J88080A0000	179
J88080A0004	179
J88080A0005	179
J88080A0006	179
J88080A0008	179
J88080A0019	179
J88080A0020	179
J88080A0021	179
J88080A0022	179
J88080A0023	179
J88083A0000	105
J88083A0001	105
J88083A0002	105
J88083A0003	105
J88083A0004	105
J88083A0005	105
J88083A0006	90
J88083A0007	90
J88083A0008	90
J88083A0009	90
J88083A0010	90
J88083A0011	90
J88083A0012	90
J88083A0013	90
J88083A0014	90
J88083A0015	90
J88083A0016	90
J88083A0017	90
J88083A0022	133
J88083A0024	133
J88083A0026	133
J88084A0000	110
J88084A0001	110
J88084A0002	97
J88084A0003	97
J88084A0004	97
J88084A0005	97
J88084A0006	137
J88084A0007	137
J88084A0008	137
J88084A0009	137
L	
L00000A0072	190
L00000A0073	191
L00000A0074	191
L00000A0075	192
L00000A0076	192
L00000A0077	193
L00000A0081	190
L00000A0082	191
L00000A0083	191
L00000A0084	192
L00000A0085	192
L00000A0086	193
L00000A0102	199
L00000A0103	199
L00000A0118	199
L00000A0120	199
L00000A0130	193
L00000A0131	193
L00000A0138	189
L00000A0141	188
L00000A0146	188
L00000A0149	187
L00000A0189	194
L00000A0192	194
L00000A0193	195
L00000A0194	195
L00000A0195	195
L00000A0196	195
L00000A0197	195
L00000A0198	195
L00000A0199	196
L00000A0200	196
L00000A0201	196
L00000A0202	196
L00000A0203	197
L00000A0204	197
L00000A0226	194
L00000A0230	190
L00000A0231	191
L00000A0232	191
L00000A0233	192
L00000A0234	192
L00000A0235	193
L00000A0236	193
L00000A0237	194
L00000A0238	194
L00000A0253	197
L00000A0254	197
L00000A0274	202
L00000A0376	198
L00000A0377	198
L00000D0017	199
L00000D0022	200
L00000D0023	201
L00000D0024	201
L00000D0025	200
L00000D0026	199
L00000D0031	200
L00000D0032	201
L00000D0033	201
L00000D0034	200
L00000D0035	199
L00000D0089	202
L00000D0090	202
L00001A0084	190
L00001A0085	191
L00001A0086	191
L00001A0087	192
L00001A0088	192
L00001A0089	193
L00001A0090	190
L00001A0099	199
L00001A0117	199
L00001A0123	193
L00001A0130	189
L00001A0133	188
L00001A0136	188
L00001A0139	187
L00001A0154	194
L00001A0155	194
L00001A0156	195
L00001A0157	195
L00001A0159	195
L00001A0162	196
L00001A0163	196
L00001A0164	197
L00001A0194	194
L00001A0199	197
L00001A0288	198
L00001A0289	198
L00001D0032	200
L00001D0033	201
L00001D0034	201
L00001D0035	200
L00001D0036	199
L00001D0095	202
L00002A0112	190
L00002A0113	191
L00002A0114	191
L00002A0115	192
L00002A0116	192
L00002A0117	193
L00002A0120	199
L00002A0139	199
L00002A0141	193
L00002A0147	189
L00002A0150	188
L00002A0153	188
L00002A0156	187
L00002A0173	194
L00002A0174	195
L00002A0175	196
L00002A0176	195
L00002A0177	195
L00002A0179	196
L00002A0180	197
L00002A0195	194
L00002A0203	197
L00002A0282	198
L00002A0283	198
L00002D0076	200
L00002D0077	201
L00002D0078	201
L00002D0079	200
L00002D0080	199
L00002D0123	202
L00003A0049	198
L00003A0055	190
L00003A0056	191
L00003A0057	191
L00003A0058	192
L00003A0059	192
L00003A0060	193
L00003A0067	199
L00003A0078	199
L00003A0085	193
L00003A0088	189
L00003A0091	188
L00003A0095	188
L00003A0098	187
L00003A0119	194
L00003A0121	195
L00003A0123	195
L00003A0124	195
L00003A0125	196
L00003A0126	196
L00003A0127	197
L00003A0147	194
L00003A0157	197
L00003A0250	198
L00003D0026	200
L00003D0027	201
L00003D0028	201
L00003D0029	200
L00003D0030	199
L00003D0062	202
L00004A0054	190
L00004A0055	191
L00004A0056	191
L00004A0057	192
L00004A0058	192
L00004A0060	193
L00004A0064	199
L00004A0071	193
L00004A0081	188
L00004A0084	187
L00004A0087	189
L00004A0090	188
L00004A0109	194
L00004A0111	195
L00004A0112	195
L00004A0113	195
L00004A0114	196
L00004A0115	196
L00004A0116	197
L00004A0134	194
L00004A0145	197
L00004A0225	198
L00004D0037	200
L00004D0038	201
L00004D0039	201
L00004D0040	200
L00004D0041	199
L00004D0062	202
L00005A0027	190

14 Index of Order Numbers

Order no.	Page
L00005A0028	191
L00005A0029	191
L00005A0030	192
L00005A0031	192
L00005A0032	193
L00005A0035	199
L00005A0051	193
L00005A0055	188
L00005A0058	187
L00005A0061	189
L00005A0064	188
L00005A0080	194
L00005A0081	195
L00005A0082	195
L00005A0083	195
L00005A0084	196
L00005A0085	196
L00005A0086	197
L00005A0103	194
L00005A0104	199
L00005A0113	197
L00005A0176	198
L00005D0035	199
L00005D0036	200
L00005D0037	200
L00005D0038	201
L00005D0039	201
L00005D0040	202
L00006A0033	190
L00006A0034	190
L00006A0035	190
L00006A0036	190
L00006A0037	191
L00006A0038	191
L00006A0039	191
L00006A0040	191
L00006A0041	191
L00006A0042	191
L00006A0043	191
L00006A0044	191
L00006A0045	192
L00006A0046	192
L00006A0047	192
L00006A0048	192
L00006A0049	192
L00006A0050	192
L00006A0051	192
L00006A0052	192
L00006A0053	193
L00006A0054	193
L00006A0055	193
L00006A0056	193
L00006A0096	188
L00006A0099	187
L00006A0102	189
L00006A0105	188
L00006D0078	199
L00006D0079	199
L00006D0080	199
L00006D0081	199
L00006D0082	200
L00006D0083	200
L00006D0084	200
L00006D0085	200
L00006D0086	200
L00006D0087	200
L00006D0088	200
L00006D0089	200
L00006D0090	201
L00006D0091	201
L00006D0092	201
L00006D0093	201
L00006D0094	201
L00006D0095	201
L00006D0096	201
L00006D0097	201
L00006D0098	202
L00006D0099	202
L00006D0100	202
L00006D0101	202
L00810A0003	209
L00810A0004	209
L00810A0005	209
L00810A0010	209
L00810A0014	209
L00811A0007	209
L00811A0009	209
L00811A0012	209
L00811A0022	211
L00811A0028	209
L00811A0034	209
L00812A0007	209
L00812A0009	209
L00812A0011	209
L00812A0018	209
L00812A0021	209
L00813A0003	209
L00813A0004	209
L00813A0005	209
L00813A0008	209
L00813A0014	209
L00815A0006	209
L00815A0008	209
L00816A0003	209
L00816A0004	209
L00816A0005	209
L00850A0001	210
L00851A0008	210
L00852A0000	210
L00853A0001	210
L00855A0001	210
L00870A0000	206
L00870A0001	206
L00870A0002	206
L00870A0003	206
L00870A0005	206
L00871A0003	206
L00871A0004	206
L00871A0005	206
L00871A0006	206
L00871A0008	206
L00872A0000	206
L00872A0001	206
L00872A0002	206
L00872A0003	206
L00872A0006	206
L00873A0000	206
L00873A0001	206
L00873A0002	206
L00873A0003	206
L00873A0009	206
L00875A0000	206
L00875A0001	206
L00875A0002	206
L00875A0003	206
L00875A0007	206
L00880A0003	208
L00880A0006	207
L00880A0017	208
L00880A0018	207
L00880C0004	208
L00880C0005	208
L00880C0007	207
L00880C0008	207
L00880C0010	207
L00880C0015	208
L00881A0003	208
L00881A0006	207
L00881A0020	208
L00881A0021	208
L00881A0027	208
L00881A0028	207
L00881C0004	208
L00881C0005	208
L00881C0007	207
L00881C0008	207
L00881C0023	207
L00881C0024	208
L00882A0002	207
L00882A0005	208
L00882A0011	208
L00882A0019	208
L00882A0020	207
L00882C0000	208
L00882C0003	207
L00882C0004	207
L00882C0006	208
L00882C0007	208
L00882C0015	207
L00883A0002	207
L00883A0005	208
L00883A0012	208
L00883A0028	208
L00883A0029	207
L00883C0003	207
L00883C0004	207
L00883C0006	208
L00883C0007	208
L00883C0017	207
L00883C0025	208
L00885A0002	207
L00885A0005	208
L00885A0012	208
L00885A0025	208
L00885A0026	207
L00885C0000	207
L00885C0003	207
L00885C0004	207
L00885C0006	208
L00885C0007	208
L00885C0020	208
L00890A0018	211
L00890A0036	212
L00890A0037	212
L00890A0040	212
L00890A0041	210
L00890A0058	212
L00890A0077	211
L00890A0077	211
L00890A0078	212
L00890A0080	210
L00890C0019	211
L00890C0021	211
L00890C0038	210
L00890C0039	211
L00890C0055	210
L00890C0059	211
L00891A0014	212
L00891A0015	212
L00891A0016	212
L00891A0017	210
L00891A0029	212
L00891A0079	211
L00891A0079	211
L00891A0080	212
L00891A0082	210
L00891C0018	210
L00891C0019	211
L00891C0026	211
L00891C0042	210
L00891C0071	211
L00891C0072	211
L00892A0005	211
L00892A0029	212
L00892A0035	212
L00892A0036	212
L00892A0039	212
L00892A0040	210
L00892A0072	211
L00892A0072	211
L00892A0073	212
L00892A0075	210
L00892C0001	211
L00892C0009	211
L00892C0024	210
L00892C0037	210
L00892C0038	211
L00892C0048	211
L00893A0005	211
L00893A0027	212
L00893A0038	212
L00893A0039	212
L00893A0042	212
L00893A0043	210
L00893A0076	211
L00893A0076	211
L00893A0077	212
L00893A0079	210
L00893C0001	211
L00893C0003	211
L00893C0022	210
L00893C0028	211
L00893C0040	210
L00893C0041	211
L00895A0004	211
L00895A0024	212
L00895A0035	212
L00895A0036	212
L00895A0039	212
L00895A0040	210
L00895A0070	211
L00895A0070	211
L00895A0071	212
L00895A0073	210
L00895C0001	211
L00895C0003	211
L00895C0021	210
L00895C0025	211
L00895C0037	210
L00895C0038	211
L02002A0061	230
L02002A0143	230
L02002A0146	230
L02002A0175	230
L02002A0190	229
L02002A0207	228
L02002B0061	230
L02002C0061	230
L02002C0067	228
L02002C0068	228
L02002C0069	228
L02002C0070	228
L02002C0071	229
L02002C0072	229
L02002C0073	229
L02002C0074	229
L02002D0061	230
L02002E0061	230
L02002F0061	230
L80000A0000	219
L80000A0001	219
L80001A0000	219
L80002A0000	219
L80003A0000	219
L80004A0000	219
L80005A0000	219
L80100A0000	220
L80100A0001	220
L80101A0000	220
L80102A0000	220
L80103A0000	220
L80104A0000	220
L80105A0000	220
L80210A0000	218
L80210A0001	218
L80211A0000	218
L80212A0000	218
L80213A0000	218
L80214A0000	218
L80215A0000	218
L80310A0000	218
L80310A0001	218
L80311A0000	218
L80312A0000	218
L80313A0000	218
L80400A0000	189
L80401A0000	189
L80402A0000	189
L80403A0000	189
L80404A0000	189
L80405A0000	189
L80406A0000	189
L80406A0001	189
L80406A0002	189
L82000A0000	221
L82000A0001	221
L82001A0000	221
L82002A0000	221
L82003A0000	221
L82004A0000	221
L82005A0000	221
L82100A0000	222
L82100A0001	222
L82101A0000	222
L82102A0000	222
L82103A0000	222
L83500A0000	221
L83500A0001	221
L83501A0000	221
L83502A0000	221
L83503A0000	221
L83504A0000	221
L83505A0000	221
L83610A0000	219
L83610A0001	219
L83611A0000	219
L83612A0000	219
L83613A0000	219
L83614A0000	219
L83615A0000	219
L84500A0000	222
L84500A0001	222
L84501A0000	222
L84502A0000	222
L84503A0000	222
L84504A0000	222
L84505A0000	222
M	
M06000A0067	174
M06000A0068	174
N	
N00000A0013	245
N00000B0020	245
N00001A0002	245
N00100A0010	242
N00100A0011	242
N00100A0016	244
N00100A0017	242
N00100A0018	242
N01001A0019	245
N01001A0061	240
N04001A0017	243
N04001A0018	242
N04001A0024	242
N04001A0026	243
N04001A0031	241
N04001A0032	240
N04001A0033	241
N04001A0034	243
N04001A0039	243
N04001A0040	243
N04001A0046	243
N04001A0048	242
N04001A0059	242
N04001A0062	241
N04001A0063	241
N04001A0064	242
N04001A0067	244
N04001A0073	244
N04001A0074	244
N04001A0081	244
N04001A0082	244
N80000A0001	240
N80050A0000	246
N80050A0001	246
N80050A0002	246
N80090A0000	246
N81001A0000	240
N81001A0001	240
N84000A0000	239
N84001A0000	239
N84001A0001	240
N84001A0002	244
Q	
Q00051A0006	241
R	
R00040A0047	151
U	
U01010A0004	148
U01010A0011	131
U01010A0011	142

Telegärtner

Thinking around the corner.

90° Cable entry in 4x90° steps

- For CCTV, security systems, 4K, industrial applications ...
- Assembly without special tooling
- Locking of the cable entry in four 90° steps possible
- Multiport compatible thanks to its compact design
- Solid and stranded conductors AWG 22–27
- Cable diameters 5.5–10 mm
- Fully metallic plug housing

DataVoice

MFP8-4x90 Cat.6A

Field assembly RJ45 plug with variable cable entry

90° | Cat.6A | 10 GBE | 500 MHz | fully shielded | PoE+

www.telegaertner.com

Telegärtner Inc.
411 Domenic Court
Franklin Park, IL 60131

Tel: (630) 616-7600
Fax: (630) 616-8322
E-Mail: sales@telegaertner.com

Telegärtner Configurators
at a glance

TICNET-Configurator

For the optimum online planning of individual fiber optic patch panels and wall distributors, ready-to-install fiber optic links, fiber optic patch cords and pigtails, RJ45 patch cords in protection class IP20 and IP67.

Advantages at a glance:

- 6 different configurators for a wide and diverse range of individual product combinations
- Detailed product information with images and technical data
- Clear breakdown of all relevant information incl. gross list prices
- Saving of your configurations for quick subsequent orders
- View your saved configurations at any time by entering security code

www.telegaertner.com/go/ticnet

Network-Configurator

For fast and easy online planning of a structured network incl. modules/keystones, outlets, patch panels, mini distributors, patch cords and installation cable.

Advantages at a glance:

- Two different view options (floor viewing for planning across several floors as well as room view for a simple planning of your individual network) for a easy and fast configuration
- Detailed parts lists with technical data and gross list prices in Excel or PDF format for downloading
- View saved configurations and edit at any time by entering security code

www.telegaertner.com/go/network-config

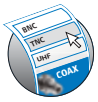

COAX-Configurator

For the optimum online planning of individually assembled RF cables incl. coaxial connectors, cable cover, labelling and cable length.

Advantages at a glance:

- Detailed display of all products which you need for your personal configuration – with PDF data sheets for downloading
- Illustration on the connectors by photo and technical drawings
- All configuration parameters at a glance: for a simple and clear cable configuration in a few steps
- Your individual configuration as a clear specification in PDF format: for downloading and printing

www.telegaertner.com/go/coaxconfig

RELIABLE. STRAIGHTFORWARD. FAST. SOLUTIONS-ORIENTED.

These are the basic requirements of industrial connectors. ***STEADY**TEC*®
has been developed to meet all four of these requirements in one go.

www.steadytec.com

STEADYTEC®

THE RELIABLE CONNECTION

Telegärtner
Karl Gärtner GmbH

Lerchenstr. 35
D-71144 Steinenbronn

Tel.: +49 (0) 71 57 / 1 25-100
Fax: +49 (0) 71 57 / 1 25-120

Email: info@telegaertner.com
Web: www.telegaertner.com