PASTERNACK
an INFINITE brand



2 Cellular, 2 Wi-Fi, 1 GPS Combination Antenna 2 N Type, 2 RP SMA, 1 TNC Connector Black

Antennas Technical Data Sheet PEANOM1130

Features

- 2 x Cellular 4G/5G N Male
- 2 x Wi-Fi 2.4 GHz / 5 GHz RPSMA Male
- 1 x GPS L1 / G1 TNC Male
- MIMO Capable
- 17 ft Cable Leads
- Indoor/Outdoor IP69K Rated
- UV Stabilized Black ABS

Applications

- Public Safety
- Emergency Services
- Mobile Base Stations
- Autonomous Vehicles
- Fleet Management
- Smart Cities
- Smart Utilities
- Industrial IoT

Description

The Pasternack PEANOM1130 is a 5-in-1 combination antenna designed for public safety, emergency services, mobile base stations, autonomous vehicles, fleet management, smart cities, smart utilities, or industrial IoT applications. This vertically polarized omnidirectional antenna has TNC male, N male and RPSMA male connectors with 17 feet cable leads. Our high-quality mobile antenna with 5 ports has a typical input VSWR of 2:1.

The IoT combination antenna from Pasternack has an overall length of 7 inches, width of 7 inches, and weight of 4 lbs. This PEANOM1130 mobile antenna is IP69K-rated and has a black-colored radome made of UV-stabilized ABS. The 2 cellular, 2 Wi-Fi, 1 GPS combination antenna has an impedance of 50 Ohms and a maximum input power of 10 Watts.

Our vertically polarized mobile antenna can operate at temperatures ranging from -40 to 70 degrees C. This MIMO-capable IoT antenna features two 4G/5G, two 2.4/5 GHz, and one L1/G1 GPS band elements in one radome. Emergency services, first responders, and fleets can rely on our 5-in-1 combination antenna to maintain a secure link between vehicles and dispatch centers.

Configuration

Design	Mobile
Radiation Pattern	Directional
Polarization	Vertical
Connector Type	N Male
Interface 2	SMA Male Reverse Polarity
Interface 3	TNC Male
Number of Ports	5

Electrical Specifications

Description	Minimum	Typical	Maximum	Units
Input VSWR		2:1		
Impedance		50		Ohms
Gain		26		dBi
Input Power			10	Watts

Click the following link (or enter part number in “SEARCH” on website) to obtain additional part information including price, inventory and certifications: 2 Cellular, 2 Wi-Fi, 1 GPS Combination Antenna 2 N Type, 2 RP SMA, 1 TNC Connector Black PEANOM1130

Pasternack Enterprises, Inc. • P.O. Box 16759, Irvine, CA 92623
Phone: (866) 727-8376 or (949) 261-1920 • **Fax:** (949) 261-7451
Sales@Pasternack.com • Techsupport@Pasternack.com

© 2020 Pasternack Enterprises All Rights Reserved

PASTERNACK
an INFINITE brand



2 Cellular, 2 Wi-Fi, 1 GPS Combination Antenna 2 N Type, 2 RP SMA, 1 TNC Connector Black

Antennas Technical Data Sheet PEANOM1130

Cellular Specifications					
Frequency Range	617 - 960	1690 - 2700	3300 - 4200	4900 - 6000	MHz
Peak Gain	4	6	7	8	dBi
Port Count		2			
Cable Type		RG58			
Cable Length		17 [5]			ft [m]
Connector Type		N Male			
Wi-Fi Specifications					
Frequency Range	2400 - 2500		4900 - 6000		MHz
Peak Gain	5		6		dBi
Port Count		2			
Cable Type		RG58			
Cable Length		17 [5]			ft [m]
Connector Type		RPSMA Male			
GPS Specifications					
Frequency Range		1562 - 1612			MHz
VSWR		<2.0:1 ± 4 MHz			
LNA Gain		26			dB
Out of band rejection		>40 dB (@ > +/- 100 MHz)			
Typical Noise Figure		≤ 2.7			dB
Notch Filter rejection @787MHz		24			dB
Operating Voltage		3 - 5			VDC
Typical Current		15			mA
Cable Type / Length		RG174 / 17 ft [5 m]			
Connector Type		TNC Male			

Mechanical Specifications

Radome Material	UV Stabilized ABS

Size

Overall Length	7 in [177.8 mm]
Width	7 in [177.8 mm]
Height	3.15 in [80.01 mm]
Weight	4 lbs [1.81 kg]

Environmental Specifications

Temperature

Operating Range	-40 to +70 deg C

Click the following link (or enter part number in “SEARCH” on website) to obtain additional part information including price, inventory and certifications: 2 Cellular, 2 Wi-Fi, 1 GPS Combination Antenna 2 N Type, 2 RP SMA, 1 TNC Connector Black PEANOM1130

Pasternack Enterprises, Inc. • P.O. Box 16759, Irvine, CA 92623
Phone: (866) 727-8376 or (949) 261-1920 • **Fax:** (949) 261-7451
Sales@Pasternack.com • Techsupport@Pasternack.com

© 2020 Pasternack Enterprises All Rights Reserved



2 Cellular, 2 Wi-Fi, 1 GPS Combination Antenna 2 N Type, 2 RP SMA, 1 TNC Connector Black

Antennas Technical Data Sheet PEANOM1130

Ingress Protection	IP69K

Compliance Certifications (see product page for current document)

Plotted and Other Data

Notes:

2 Cellular, 2 Wi-Fi, 1 GPS Combination Antenna 2 N Type, 2 RP SMA, 1 TNC Connector Black from Pasternack Enterprises has same day shipment for domestic and International orders. Our RF, microwave and millimeter wave products maintain a 99.4% availability and are part of the broadest selection in the industry.

Click the following link (or enter part number in “SEARCH” on website) to obtain additional part information including price, inventory and certifications: 2 Cellular, 2 Wi-Fi, 1 GPS Combination Antenna 2 N Type, 2 RP SMA, 1 TNC Connector Black PEANOM1130

URL: https://www.pasternack.com/26-dbi-band-mobile-antenna-tnc-connector-peanom1130-p.aspx

The information contained in this document is accurate to the best of our knowledge and representative of the part described herein. It may be necessary to make modifications to the part and/or the documentation of the part, in order to implement improvements. Pasternack reserves the right to make such changes as required. Unless otherwise stated, all specifications are nominal. Pasternack does not make any representation or warranty regarding the suitability of the part described herein for any particular purpose, and Pasternack does not assume any liability arising out of the use of any part or documentation.

Pasternack Enterprises, Inc. • P.O. Box 16759, Irvine, CA 92623
Phone: (866) 727-8376 or (949) 261-1920 • **Fax:** (949) 261-7451
Sales@Pasternack.com • Techsupport@Pasternack.com

© 2020 Pasternack Enterprises All Rights Reserved

© 2020 Pasternack Enterprises All Rights Reserved

PEANOM1130 REV 1

REVISION					
ZONE	REV	DESCRIPTION	DATE	CHANGED BY	APPROVED
	A	INITIAL RELEASE	08/10/2023	KGLEBOVA	KHIETPAS

PEANOM1130 CAD Drawing

2 Cellular, 2 Wi-Fi, 1 GPS Combination Antenna 2 N Type, 2 RP SMA, 1 TNC Connector Black

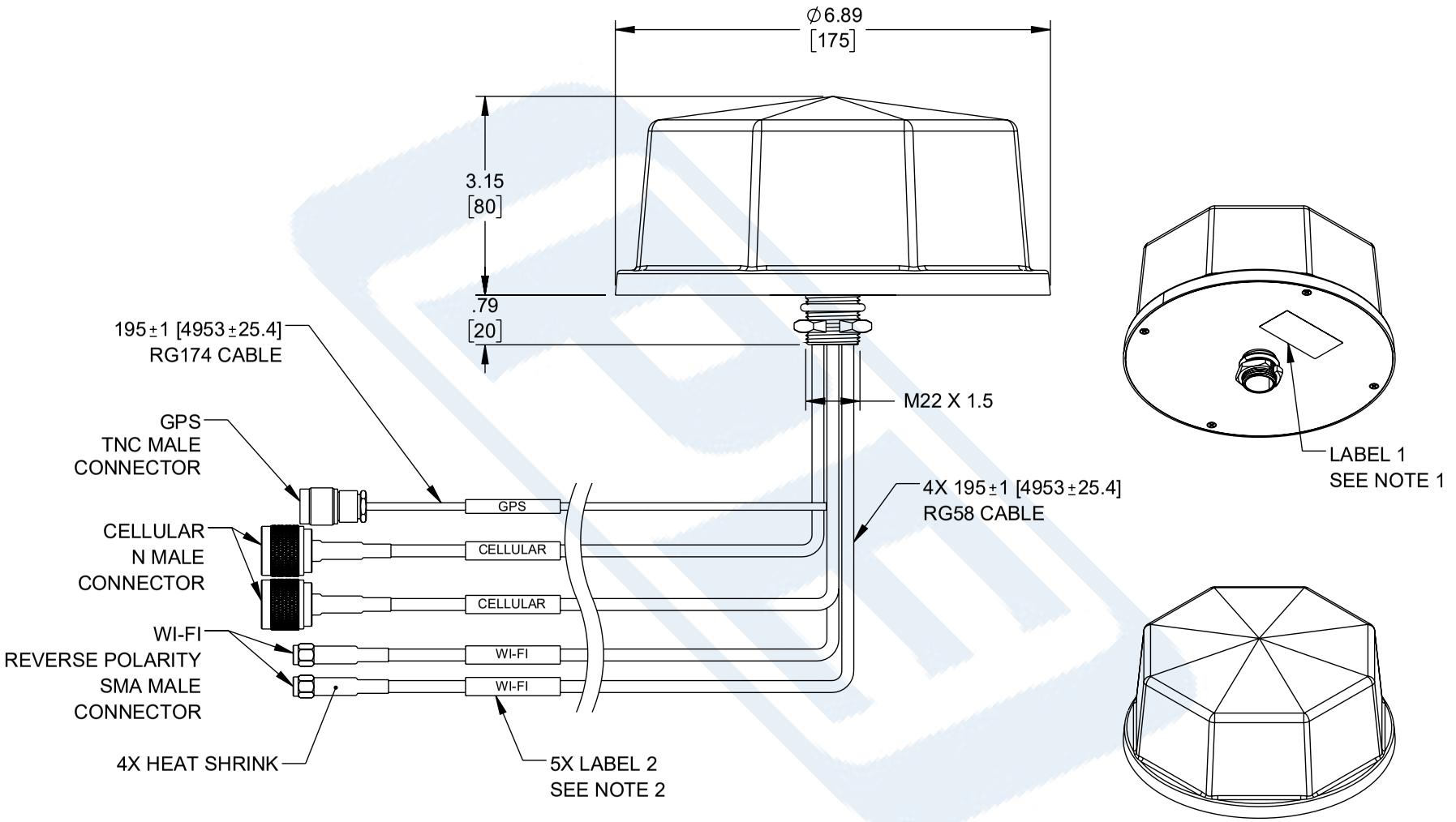

NOTES:

1. LABEL 1 PER ILS-100-03 (FOR INTERNAL REFERENCE ONLY). LABEL LOCATION FOR REFERENCE ONLY.
2. LABEL 2 PLACEMENT: 3 ± .25 INCHES FROM THE END OF CONNECTOR.

THE INFORMATION CONTAINED IN THIS DRAWING IS THE SOLE PROPERTY OF INFINITE ELECTRONICS, INC. ANY REPRODUCTION IN PART OR WHOLE WITHOUT THE WRITTEN PERMISSION OF INFINITE ELECTRONICS, INC. IS PROHIBITED.
THESE COMMODITIES, TECHNOLOGY OR SOFTWARE WERE EXPORTED FROM THE UNITED STATES IN ACCORDANCE WITH THE EXPORT ADMINISTRATION REGULATIONS. DIVERSION CONTRARY TO U.S. LAW PROHIBITED.

UNLESS OTHERWISE SPECIFIED
LEADING DIMENSIONS ARE INCHES
DIMENSIONS IN [ ] ARE MILLIMETERS

TOLERANCES:

.X = ±.2 [5]	FRACTIONS
.XX = ±.02 [0.5]	± 1/32
.XXX = ±.005 [0.13]	ANGLES ± 1°

CABLE LENGTH TOLERANCES:

≤12 [305] = +1 [25] / -0
>12 [305] ≤ 60 [1524] = +2 [51] / -0
>60 [1524] ≤ 120 [3048] = +4 [102] / -0
>120 [3048] ≤ 300 [7620] = +6 [152] / -0
>300 [7620] = +5% / -0

ALL DIMENSIONS ARE FOR REFERENCE ONLY AND SUBJECT TO CHANGE WITHOUT NOTICE.
UN-DIMENSIONED/NON-CRITICAL FEATURES MAY VARY IN SIZE AND LOCATION
COLORS MAY VARY

PASTERNACK
an INFINITE brand
Website: www.Pasternack.com
Phone: 1.866.727.8376 | 1.949.261.1920

INTERPRET ALL DIMENSIONS AND TOLERANCES PER ASME Y14.5

SCALE	SHEET
NONE	1 OF 1

DESCRIPTION
2 CELLULAR, 2 WI-FI, 1 GPS COMBINATION ANTENNA 2 N TYPE, 2 RP SMA, 1 TNC CONNECTOR BLACK

SIZE	CAGE CODE	DRAWN BY	ITEM NO.	REV
A	53919	KGLEBOVA	PEANOM1130	A

T-Rev.D3