MURR ELEKTRONIK
stay connected

M12 male 0° / M12 female 0° Y-cod. shielded

PUR AWG20/26 shielded gn UL/CSA+drag ch. 3m

Ethernet CAT5
Male straight – female straight
M12 – M12, 8-pole
Y-coded
shielded
Transmission properties with channel transmission up to 50 m
Further cable lengths on request.
Plastic housings with good resistance against chemicals and oils.
The resistance to aggressive media should be individually tested for your application. Further details on request.

Link to Product

Illustration

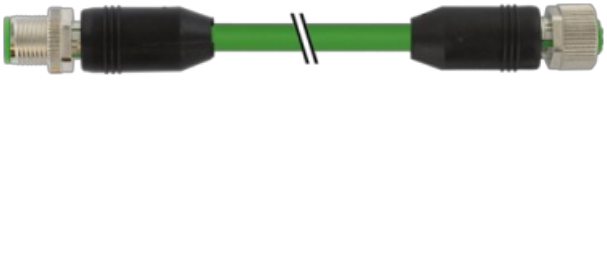

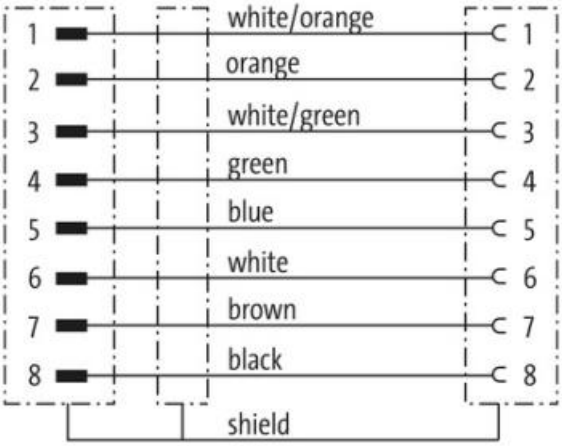

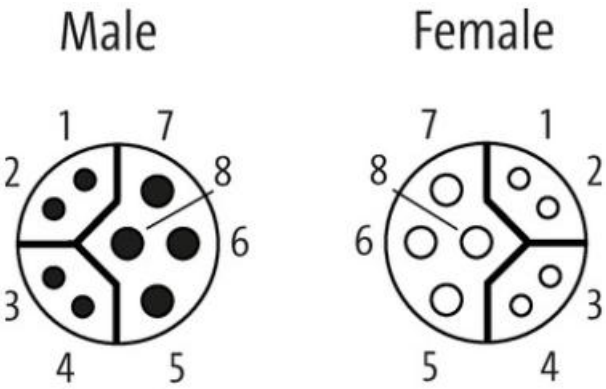

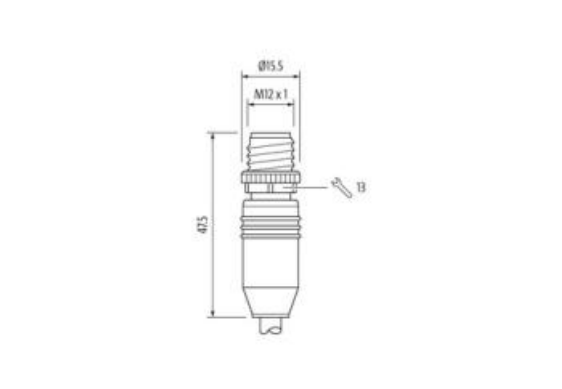

The information in this Product-PDF has been compiled with the utmost care.
Liability for the correctness completeness and topicality of the information is restricted to gross negligence. Version: 2024-07-16

MURR ELEKTRONIK
stay connected

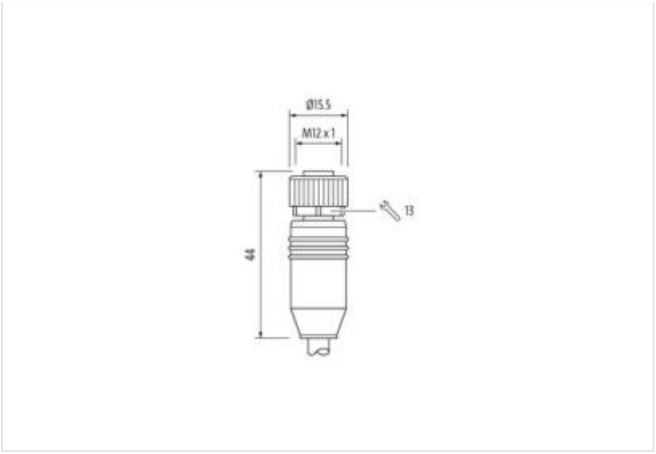

Product may differ from Image

Cable length	3 m
Side 1	
Tightening torque	0,6 Nm
Family construction form	M12
Thread	M12 x 1
Coding	Y
Material	PUR
Width across flats	SW13
Side 2	
Tightening torque	0,6 Nm
Family construction form	M12
Thread	M12 x 1
Coding	Y
Material	PUR
Commercial data	
ECLASS-6.0	27279218
ECLASS-6.1	27060307
ECLASS-7.0	27060307
ECLASS-8.0	27060307
ECLASS-9.0	27060307
ECLASS-10.1	27060307
ECLASS-11.1	27060307
ECLASS-12.0	27060307
ETIM-5.0	EC000830
customs tariff number	85444290
GTIN	4048879680684
Packaging unit	1
Electrical data | Supply	
Operating voltage AC max.	50 V
Operating voltage DC max.	50 V
Operating voltage AC (UL-listed)	30 V
Operating voltage DC (UL-listed)	30 V

The information in this Product-PDF has been compiled with the utmost care.
Liability for the correctness completeness and topicality of the information is restricted to gross negligence. Version: 2024-07-16

MURR ELEKTRONIK
stay connected

Operating current per data contact max.	0,5 A
Operating current per power contact max.	6 A
Industrial communication	
Transfer parameters	CAT5e, Class D (ISO/IEC 11801)
Data transmission rate max.	100 MBit/s
Industrial communication | Ethernet functionality	
duplex	Full duplex
Device protection | Electrical	
Degree of protection (EN IEC 60529)	IP65, IP67, IP68, IP66K
Additional condition protection degree	inserted, screwed
Pollution Degree	3
Rated surge voltage	0,8 kV
Material group (IEC 60664-1)	I
Mechanical data | Material data	
Coating locking	Nickeled
Locking material	Zinc die-casting
Mechanical data | Mounting data	
Mounting method	inserted, screwed, Shaking protection
Environmental characteristics | Climatic	
Operating temperature min.	-25 °C
Operating temperature max.	85 °C
Additional condition temperature range	depending on cable quality
Important installation notes	
Note on strain relief	Protect the connectors by suitable measures from mechanical loads, e.g. by the usage of cable ties.
Note on bending radius	**Attention:** Observe the permissible bending radii when laying cables, as the IP protection class can be endangered by excessive bending forces.
Installation | Cable	
wire arrangement	black, brown, white, blue, (orange-white, green, orange, green-white)
Cable identification	805
Jacket Color	green
Type of Certificate	cURus
Amount stranding	1
Stranding	4 wires around 1 Filler twisted
Amount stranding (type 2)	1
Stranding (type 2)	4 wires around Stranding combination with Filler twisted
Cable shielding (type)	copper braid, tinned
Cable shielding (coverage)	85 %
Pair shielding (type)	copper braid, tinned
Banding	Fleece, Foil
Filler	yes
wire arrangement	black, brown, white, blue, (orange-white, green, orange, green-white)
Cable weigth	107,8 g/m
Material jacket	PUR
Shore hardness jacket	90 ± 5 Shore A
Freedom from ingredients (jacket)	lead-free, cadmium-free, CFC-free, halogen-free, silicone-free
Outer-diameter (jacket)	8,1 mm
Tolerance outer diameter (sheath)	± 5 %
Material wire insulation	PP
Amount wires	4
Outer diameter insulation	1,5 mm
Outer diameter tolerance core insulation	± 5 %

The information in this Product-PDF has been compiled with the utmost care.
Liability for the correctness completeness and topicality of the information is restricted to gross negligence. Version: 2024-07-16

MURR ELEKTRONIK
stay connected

Shore hardness wire insulation	55 ± 5 Shore D
Ingredient freeness wire insulation	lead-free, cadmium-free, CFC-free, halogen-free, silicone-free
Amount strands (wire)	19
Diameter of single wires	20 AWG
Conductor crosssection (wire)	20 AWG
Material conductor wire	Stranded copper wire, bare
Material wire insulation (Data)	PP
Outer diameter wire insulation (Data)	1,1 mm
Tolerance outer diameter wire insulation (data)	± 5 %
Shore hardness wire insulation (Data)	55 ± 5 Shore D
Ingredient freeness wire insulation (Data)	lead-free, cadmium-free, CFC-free, halogen-free, silicone-free
Amount wires (Data)	4
Amount strands wire (Data)	19
Diameter of single wires (Data)	26 AWG
Conductor crosssection wire (Data)	26 AWG
Material conductor wire (Data)	Stranded copper wire, bare
Nominal voltage AC max.	60 V
Current load capacity (standard)	to DIN VDE 0298-4
Current load capacity min. wire	5,9 A
Current load capacity min. Wire (Data)	2 A
Characteristic impedance	100 Ω ± 15 % @ 1 MHz
Electrical resistance line constant wire	35 Ω/km
Electrical resistance coating wire (Data)	140 Ω/km
AC withstand voltage (wire - wire)	1 kV @ 60 s
Electrical capacity line constant (wire - wire)	52000 pF/km
Power frequency withstand voltage (wire - jacket)	1 kV @ 60 s
AC withstand voltage (wire - shield)	1 kV @ 60 s
Isolation resistance	5000 MΩ
Min. operating temperature (static)	-50 °C
Max. operating temperature (fixed)	80 °C / 90 °C @ 10000 h Operation
Operating temperature min. (dynamic)	-40 °C
Operating temperature max. (dynamic)	80 °C / 90 °C @ 10000 h Operation
Flame resistance	UL 1581 § 1100 FT2 | IEC 60332-2-2 | UL 1581 § 1090
chemical resistance	Good, application-related testing
Gasoline resistance	Good, application-related testing
Oil resistance	Good, application-related testing | DIN EN 60811-404
Bending radius (installation)	x Outer diameter
Bending radius (fixed)	5 x Outer diameter
Bending radius (dynamic)	10 x Outer diameter
No. of bending cycles (C-track)	5 Mio.
Traversing distance (C-track)	5 m
Travel speed (C-track)	3,3 m/s
No. of torsion cycles	2 Mio.
Torsion stress	± 30 °/m
Torsion speed	35 cycles/min

The information in this Product-PDF has been compiled with the utmost care.
Liability for the correctness completeness and topicality of the information is restricted to gross negligence. Version: 2024-07-16