MURR ELEKTRONIK
stay connected

CAP FOR D-BOX M12 8-WAY 5-POLE

No pot.-sep. 5m PUR/PVC, 16x0,34+3X0.75

for 8-way distribution boxes, 5-pole
5.0 m
Further cable lengths on request.
Plastic housings with good resistance against chemicals and oils.
The resistance to aggressive media should be individually tested for your application. Further details on request.

Link to Product

Illustration



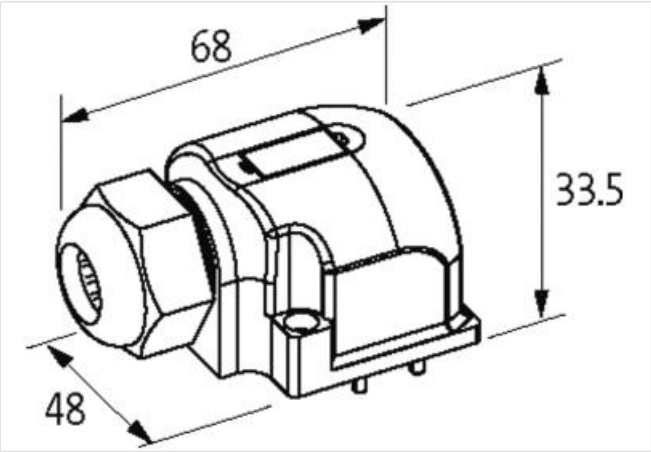

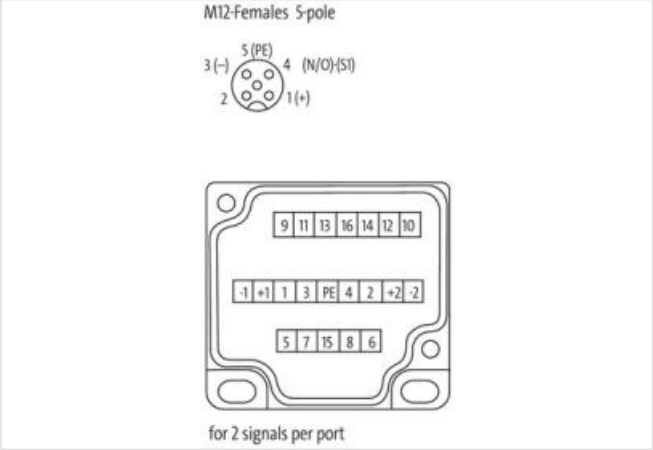

Product may differ from Image

Commercial data

ECLASS-6.0	27143423
ECLASS-6.1	27279219
ECLASS-7.0	27279219
ECLASS-8.0	27279219
ECLASS-9.0	27440108

The information in this Product-PDF has been compiled with the utmost care.
Liability for the correctness completeness and topicality of the information is restricted to gross negligence. Version: 2024-07-05

MURR ELEKTRONIK
stay connected

ECLASS-10.1	27440108
ECLASS-11.1	27440108
ECLASS-12.0	27440108
ETIM-5.0	EC002585
customs tariff number	85444290
GTIN	4048879053808
Packaging unit	1
Electrical data | Supply	
Total current max.	8 A
Device protection | Media	
Flame resistance	flame retardant
Mechanical data | Material data	
Material housing	Plastic
Environmental characteristics | Climatic	
Operating temperature min.	-20 °C
Operating temperature max.	70 °C
Additional condition temperature range	depending on cable quality
Installation | Cable	
Cable identification	398
Cable Type	2
Function cable	Hybrid, Signal, Power
Jacket Color	gray
Type of Certificate	cURus
Amount stranding	1
Stranding	7 wires around Core filler twisted
Amount stranding (type 2)	1
Stranding (type 2)	12 wires around Stranding combination twisted
wire arrangement	white, gray-pink, brown-green, yellow, green-white, green, red-blue, (violet, brown-gray, black, gray-white, red, brown-yellow, pink, yellow-white, gray, blue, brown, green-yellow)
Cable weigth	165 g/m
Material jacket	PUR
Shore hardness jacket	87 ± 5 Shore A
Freedom from ingredients (jacket)	lead-free, cadmium-free, CFC-free, silicone-free
Outer-diameter (jacket)	10 mm
Tolerance outer diameter (sheath)	± 5 %
Material inner jacket	PVC
Color (inner jacket)	gray
Material wire insulation	PVC
Amount wires	16
Outer diameter insulation	1,3 mm
Outer diameter tolerance core insulation	± 5 %
Shore hardness wire insulation	43 ± 5 Shore D
Material properties wire insulation	good machinability
Ingredient freeness wire insulation	lead-free, cadmium-free, CFC-free, silicone-free
Amount strands (wire)	19
Diameter of single wires	0,15 mm
Conductor crosssection (wire)	0,34 mm²
Material conductor wire	Stranded copper wire, bare
Conductor type (wire)	Strand class 5
Material wire insulation (Power)	PVC
Outer diameter wire insulation (Power)	1,8 mm
Tolerance outer diameter wire insulation (Power)	±5 %

The information in this Product-PDF has been compiled with the utmost care.
Liability for the correctness completeness and topicality of the information is restricted to gross negligence. Version: 2024-07-05

MURR ELEKTRONIK
stay connected

Shore hardness wire insulation (Power)	43±5 Shore D
Material properties wire insulation (Power)	good machinability
Ingredient freeness wire insulation (Power)	lead-free, cadmium-free, CFC-free, silicone-free
Amount wires (Power)	3
Amount strands wire (Power)	42
Diameter of single wires (Power)	0,15 mm
Wire conductor cross section (Power)	0,75 mm²
Material conductor wire (Power)	Stranded copper wire, bare
Conductor type wire (Power)	strand class 6
Max. rated voltage (conductor - conductor)	300 V
Max. rated voltage (conductor - ground)	300 V
Current load capacity (standard)	to DIN VDE 0298-4
Current load capacity min. wire	4 A
Current carrying capacity min. wire (Power)	7,8 A
Electrical resistance line constant wire	57 Ω/km @ 20 °C
Electrical resistance coating wire (Power)	26 Ω/km @20 °C
AC withstand voltage (wire - wire)	2 kV @ 60 s
Power frequency withstand voltage (wire - jacket)	2 kV @ 60 s
Min. operating temperature (static)	-30 °C
Max. operating temperature (fixed)	80 °C
Operating temperature min. (dynamic)	-5 °C
Operating temperature max. (dynamic)	70 °C
Flame resistance	IEC 60332-2-2 | UL 1581 § 1090 | UL 1581 § 1100 FT2
chemical resistance	Good, application-related testing
Gasoline resistance	Good, application-related testing
Oil resistance	Good, application-related testing | DIN EN 60811-404
Bending radius (fixed)	5 x Outer diameter
Bending radius (dynamic)	10 x Outer diameter
No. of bending cycles (C-track)	2 Mio. @ 25 °C
Traversing distance (C-track)	5 m @ 25 °C
Travel speed (C-track)	2 m/s @ 25 °C

Connection type 2

Family construction form	free cable end
No. of poles	19
Family construction form	M12
Gender	female
Color contact carrier	black
Coding	A
No. of poles	5
PIN 1	+
PIN 2	NC S 2
PIN 3	-
PIN 4	NO S 1
PIN 5	PE

The information in this Product-PDF has been compiled with the utmost care.
Liability for the correctness completeness and topicality of the information is restricted to gross negligence. Version: 2024-07-05