GlobTek, Inc. www.globtek.com 186 Veterans Drive, Northvale, NJ 07647 Tel. (201) 784-1000 Fax (201) 784-0111	Drawing Title: GTM96300-3624-T2, Medical/ICT/ITE/Household use Power Supply, Efficiency Level: USA DOE Level VI / Eco-design Directive 2009/125/EC, (EU) 2019/1782, Case Color/Style: GlobTek Black, Desktop/External, Regulated Switchmode AC-DC Power Supply AC Adaptor, Input Rating: 100-240V~, 50-60 Hz, IEC 60320/C8, , Output Rating: 36.00W, 24.0V@1.5A, Pin Out: Polarity Configuration T00 All plugs are Medical Grade, Locking, Polarized once installed, and single use only. Product demonstration link: https://en.globtek.com/news/t00-changeable-output-plug-system-for-power-supplies MOLDED CONNECTORS AVAILABLE, Output Configuration: 1500 mm, 18/2 Cond, Round Black, T-plug system (includes 5.5x2.5, 5.5x2.1, 3.5x1.3mm plugs in each kit), Ferrite: None, GlobTek Black, GT Cord # C3775, Blades/Input Cord: Not Applicable, Approvals:	
	Model No. GTM96300-3624-T2	
	Part No./Ordering No. TR9KI1500T00-IMR6B	Rev C

In Addition to GlobTek Inc.'s renewed ISO9001:2015 - Quality Management System Certification, GlobTek Inc. is now certified to:

ISO13485:2016 - Medical Devices Quality Management System Certification
ISO14001:2015 - Environmental Management System Certification

ISO Certificates are available online at https://www.globtek.com/iso-certificates/

The acceptance of this specification and use of the product described in this document indicates the acceptance and binding of the customer to Globtek TERMS AND CONDITIONS (attached to the end of this document), which supersede all other agreements, terms, and conditions (https://www.globtek.com/terms-and-conditions/).

The purchaser of this product (Customer) agrees that it is their sole responsibility to determine suitability/fitness of the product described in this specification for their application and to take precautions for protection against any hazards attendant to the handling and use of the product.

Footnote:

GlobTek Inc. will not be liable for the safety and performance of these power supplies/battery packs if unauthorized access and repair occurs. End user should consult applicable UL, CSA or EN standards for proper installation instruction.

Limitation of Use:

GlobTek products are intended for use with commercial, medical, and/or industrial equipment only. GlobTek product are not authorized for use as mission critical components in life support hazardous environment, nuclear or aircraft applications without prior written approval from the CEO of GlobTek Inc.
Contents of this document are subject to change without prior notice.

Customer Approval of Specification:

Please approve, sign and send back to GlobTek so we can complete order processing.
A delay in receipt of this form will delay delivery schedule.

Company Name:	Customer P/N:
Quote Number:	Date:
Authorized Representative Name:	Authorized Representative Signature:

PROPRIETARY INFORMATION
PROPRIETARY OF GLOBTEK, INC. ANY REPRODUCTION, DISCLOSURE OR USE OF THIS DRAWING, IN WHOLE OR IN PART, IS HEREBY PROHIBITED EXCEPT AS SPECIFIED IN WRITING BY GLOBTEK, INC. © GlobTek, Inc. 2018 - 2024
guest / 05/27/2024 4:11:25 PM GMT CLONED FROM RR9KA4500T00-IMR6B

GlobTek, Inc.
www.globtek.com
186 Veterans Drive,
Northvale, NJ 07647
Tel. (201) 784-1000
Fax (201) 784-0111

Drawing Title: GTM96300-3624-T2, Medical/ICT/ITE/Household use Power Supply, Efficiency Level: USA DOE Level VI / Eco-design Directive 2009/125/EC, (EU) 2019/1782, Case Color/Style: GlobTek Black, Desktop/External, Regulated Switchmode AC-DC Power Supply AC Adaptor, Input Rating: 100-240V~, 50-60 Hz, IEC 60320/C8, , Output Rating: 36.00W, 24.0V@1.5A, Pin Out: Polarity Configuration T00 All plugs are Medical Grade, Locking, Polarized once installed, and single use only. Product demonstration link: https://en.globtek.com/news/t00-changeable-output-plug-system-for-power-supplies MOLDED CONNECTORS AVAILABLE, Output Configuration: 1500 mm, 18/2 Cond, Round Black, T-plug system (includes 5.5x2.5, 5.5x2.1, 3.5x1.3mm plugs in each kit), Ferrite: None, GlobTek Black, GT Cord # C3775, Blades/Input Cord: Not Applicable, Approvals:

Model No. GTM96300-3624-T2

Part No./Ordering No. TR9KI1500T00-IMR6B | Rev C

REVISION HISTORY

REV	DESCRIPTION	SUB	DATE	APPROVED
C	Add Grounding configuration (F1) Class II / Double Insulated	QA	08/24/2018	QA
B	Update grounding configuration	QA	03/23/2018	QA
A	Initial release	QA	03/20/2018	QA

POWER SUPPLY INFORMATION

TYPE	Desktop/External
TECHNOLOGY	Regulated Switchmode AC-DC Power Supply AC Adaptor
CASE COLOR	GlobTek Black
NAMEPLATE RATED INPUT	100-240V~, 50-60 Hz, 1A
INPUT CONFIG	IEC 60320/C8
WATTS	36.00
VOLTS OUT	24.0
CURRENT OUT (Amps)	1.5
BLADE/CORD INCLUDED	N/A Not Applicable
BLADE/CORD INSTALLED	N/A :Not Applicable
INGRESS PROTECTION	IP42, IP54 Option available
GROUNDING CONFIGURATION	(F1) Floating output, Class II / double insulated
EFFICIENCY LEVEL	USA DOE Level VI / Eco-design Directive 2009/125/EC, (EU) 2019/1782 - Europe Code of Conduct on Energy Efficiency of External Power Supplies - Version 5
OUTPUT CONFIGURATION	1500 mm, 18/2 Cond, Round Black, T-plug system (includes 5.5x2.5, 5.5x2.1, 3.5x1.3mm plugs in each kit), Ferrite: None, GlobTek Black, GT Cord # C3775
OVERMOLDED	Yes
OUTPUT CONNECTOR GENDER	not applicable
CONNECTOR PIN OUT	Polarity Configuration T00 All plugs are Medical Grade, Locking, Polarized once installed, and single use only. Product demonstration link: https://en.globtek.com/news/t00-changeable-output-plug-system-for-power-supplies MOLDED CONNECTORS AVAILABLE
LABEL SPECS	Standard GT,L-1186
SPECIAL BARCODE LABEL MATERIAL	No
PACK SPEC	Packing for DT plug model with T00 plug and manual
USER MANUAL	809-DESKTOPUSERMANUAL on A4 paper

PROPRIETARY INFORMATION
PROPRIETARY OF GLOBTEK, INC. ANY REPRODUCTION, DISCLOSURE OR USE OF THIS DRAWING, IN WHOLE OR IN PART, IS HEREBY PROHIBITED EXCEPT AS SPECIFIED IN WRITING BY GLOBTEK, INC. © GlobTek, Inc. 2018 - 2024
guest / 05/27/2024 4:11:25 PM GMT CLONED FROM RR9KA4500T00-IMR6B

GlobTek, Inc.
www.globtek.com
186 Veterans Drive,
Northvale, NJ 07647
Tel. (201) 784-1000
Fax (201) 784-0111

Drawing Title: GTM96300-3624-T2, Medical/ICT/ITE/Household use Power Supply, Efficiency Level: USA DOE Level VI / Eco-design Directive 2009/125/EC, (EU) 2019/1782, Case Color/Style: GlobTek Black, Desktop/External, Regulated Switchmode AC-DC Power Supply AC Adaptor, Input Rating: 100-240V~, 50-60 Hz, IEC 60320/C8, , Output Rating: 36.00W, 24.0V@1.5A, Pin Out: Polarity Configuration T00 All plugs are Medical Grade, Locking, Polarized once installed, and single use only. Product demonstration link: https://en.globtek.com/news/t00-changeable-output-plug-system-for-power-supplies MOLDED CONNECTORS AVAILABLE, Output Configuration: 1500 mm, 18/2 Cond, Round Black, T-plug system (includes 5.5x2.5, 5.5x2.1, 3.5x1.3mm plugs in each kit), Ferrite: None, GlobTek Black, GT Cord # C3775, Blades/Input Cord: Not Applicable, Approvals:	
Model No. GTM96300-3624-T2	
Part No./Ordering No. TR9KI1500T00-IMR6B	Rev C

Notes/Modifications/Customizations (notes in this section supersede the values shown in the standard spec)

DIMENSIONS ARE IN MM UNLESS SPECIFIED OTHERWISE

PROPRIETARY INFORMATION

PROPRIETARY OF GLOBTEK, INC. ANY REPRODUCTION, DISCLOSURE OR USE OF THIS DRAWING, IN WHOLE OR IN PART, IS HEREBY PROHIBITED EXCEPT AS SPECIFIED IN WRITING BY GLOBTEK, INC. © GlobTek, Inc. 2018 - 2024

guest / 05/27/2024 4:11:25 PM GMT CLONED FROM RR9KA4500T00-IMR6B

GlobTek, Inc.
www.globtek.com
186 Veterans Drive,
Northvale, NJ 07647
Tel. (201) 784-1000
Fax (201) 784-0111

Drawing Title: GTM96300-3624-T2, Medical/ICT/ITE/Household use Power Supply, Efficiency Level: USA DOE Level VI / Eco-design Directive 2009/125/EC, (EU) 2019/1782, Case Color/Style: GlobTek Black, Desktop/External, Regulated Switchmode AC-DC Power Supply AC Adaptor, Input Rating: 100-240V~, 50-60 Hz, IEC 60320/C8, , Output Rating: 36.00W, 24.0V@1.5A, Pin Out: Polarity Configuration T00 All plugs are Medical Grade, Locking, Polarized once installed, and single use only. Product demonstration link: https://en.globtek.com/news/t00-changeable-output-plug-system-for-power-supplies MOLDED CONNECTORS AVAILABLE, Output Configuration: 1500 mm, 18/2 Cond, Round Black, T-plug system (includes 5.5x2.5, 5.5x2.1, 3.5x1.3mm plugs in each kit), Ferrite: None, GlobTek Black, GT Cord # C3775, Blades/Input Cord: Not Applicable, Approvals:	
Model No. GTM96300-3624-T2	
Part No./Ordering No. TR9KI1500T00-IMR6B	Rev C

ELECTRICAL SPECIFICATIONS

A) ELECTRICAL SPECIFICATIONS:

01. Input Voltage: Specified 90-264 Vac, Nameplate rated: 100-240Vac
    90-264 Vac range @ 100% of rated load current
    85-264 Vac range @ 85% of rated load current
    110-370 VDC range @ 100% of rated load current
02. Input Frequency: Specified 47-63 Hz, Nameplate rated 50-60Hz
03. Output Regulation: +/- 5% measured at the output connector
04. Line Voltage Regulation: +/- 0.5% typical measured at full load
05. Output Ripple (Vp-p): 1% or 100 mV whichever is greater, measured at 20 MHz bandwidth with 0.1uF ceramic capacitor in parallel with a low impedance 47uF electrolytic capacitor connected at the end of the output connector
06. Turn-ON/OFF Overshoot: 5% maximum, 1 ms typical recovery time for 40% to 70% step load
07. Turn-ON Delay: 1 second maximum @ full load, nominal line
08. Hold-Up Time: 8 ms typical @ nominal input voltage and full load
09. Inrush Current: 30A/60A maximum cold start @ 115/230Vac input
10. Efficiency: Compliant with Efficiency Level VI and CoC Tier 2 standards
11. No Load Standby Power: <0.075 W @ 230Vac

B) PROTECTION

01. Input Protection: Input line fusing and 300Vac MOV
02. Short Circuit/ Overload: Electronically protected; output will auto recover upon removal of fault
    Output Current Limit: 110% to 160% of rated output current
    (upper end of current limit range is determined by normal output power rating,
    not derated output power level)
03. Output Over-Voltage: 110% to 130% of nominal output voltage

C) SAFETY

01. Dielectric Withstand Voltage: 4000Vac or 5656Vdc from input to output,
    On Class I models, 3000Vac or 4242Vdc from input to earth
02. Earth Leakage Current: Class I models < 300uA, N/A for Class II models
03. Touch Current: Class I models < 20uA, Class II models < 75uA
04. Earth Continuity Test: < 0.1 Ohm between earth pin at AC input and PCB termination point (Class I models only)
05. Means of Protection: 2 x MOPP primary-to-secondary
06. Compliant Standards: See listings at end of this drawing for specifics
07. Output Isolation Options:
    a) C8 or C18 Inlet, Class II
    b) C6 or C14 Inlet, Class II FE, output isolated from earth contact
    c) C6 or C14 Inlet, Class I, Output negative directly attached to earth contact

D) EMC

EN 60601-1-2, 4th edition
Emissions, per EN 55032, EN 61000-6-3, EN 61000-6-4, CISPR11 and CISPR22
Conducted Emissions: Class B, FCC Part 15, Class B
Radiated Emissions: Class B, FCC Part 15, Class B
Line Frequency Harmonics EN61000-3-2, Class A

PROPRIETARY INFORMATION
PROPRIETARY OF GLOBTEK, INC. ANY REPRODUCTION, DISCLOSURE OR USE OF THIS DRAWING, IN WHOLE OR IN PART, IS HEREBY PROHIBITED EXCEPT AS SPECIFIED IN WRITING BY GLOBTEK, INC. © GlobTek, Inc. 2018 - 2024
guest / 05/27/2024 4:11:25 PM GMT CLONED FROM RR9KA4500T00-IMR6B

Voltage Fluctuations/Flicker EN61000-3-3

Immunity, per EN 55035, EN 61000-6-1, EN 61000-6-2
Static Discharge Immunity EN61000-4-2, 10KV Contact Discharge, 20KV air discharge
Radiated RF Immunity EN61000-4-3, 10V/m 80-1000MHz, 3V/m 1-2.7GHz, 80% 1KHz AM.
EFT/Burst Immunity EN61000-4-4, 4KV/100KHz.
Line Surge Immunity EN61000-4-5, 2KV differential, 4KV common-mode
Conducted RF Immunity EN61000-4-6, 3Vrms, 80% 1KHz AM
Power Frequency Magnetic Field Immunity EN61000-4-8, 3A/m
Voltage Dip Immunity EN61000-4-11, Performance Criteria B/C

E) OTHER:
01. MTBF: 1,000,000 Hours @ 40°C ambient temperature, full load
02. GTM96300 Family: -10°C to 40°C ambient temperature with full load
Regarding Operating Temperature,
a- See below derating table for output power capability at alternate temperature
b- Extended low end temperature range available as custom option
03. Operating Humidity: 0% to 95% relative humidity, non-condensing
04. Storage Temperature: -30°C to 80°C
05. Operating Altitude: 5000 meters
06. ROHS: Compliant with latest regulations, see approvals section below

F) ENCLOSURE
01. Housing: High impact plastic, 94V0 polycarbonate, non-vented
02. Markings: Label or Laser Printed
03. AC Input mechanical options: Desktop C6, C8, C14 or C18 IEC Inlet.
Hybrid option (Desktop or Changeable Blade Wall Plug-in) Class I or Class II input

G) SPECIAL OPTIONS
01. Cost reduction, removal of LED
02. Custom cordsets, various cordage types, and connector types
03. Custom markings
04. Short term output surge capability
05. Reduced leakage current versions
06. Tightened output voltage tolerance
07. Reduced output ripple level
08. Reduced output power rating marking
09. High reliability PCB laminate with plated through holes for IPC610 Class 2 compliance
10. Special housing colors and cordset colors

PROPRIETARY INFORMATION
PROPRIETARY OF GLOBTEK, INC. ANY REPRODUCTION, DISCLOSURE OR USE OF THIS DRAWING, IN WHOLE OR IN PART, IS HEREBY PROHIBITED EXCEPT AS SPECIFIED IN WRITING BY GLOBTEK, INC. © GlobTek, Inc. 2018 - 2024
guest / 05/27/2024 4:11:25 PM GMT CLONED FROM RR9KA4500T00-IMR6B

11. Quasi constant current output, for battery charger applications
12. Back EMF applications, custom solutions. For unusual motor load aps and other high inductance reverse energy flow requirements
13. Improved ingress protection rating

TO ADDRESS SYSTEM-LEVEL EMI CONCERNS, FERRITE CHOKES/BEADS MAY BE ADDED/REVISED UPON REQUEST. A SAMPLE KIT OF GLOBTEK'S STANDARD FERRITES IS AVAILABLE UNDER GLOBTEK P/N: EMI-MITIGATION-KIT1

FOR ADDITIONAL INFORMATION, PLEASE READ OUR WHITE PAPER AT: https://r.globtek.info/3QeaqtD

INGRESS PROTECTION: IP42, IP54 Option available

PROPRIETARY INFORMATION

PROPRIETARY OF GLOBTEK, INC. ANY REPRODUCTION, DISCLOSURE OR USE OF THIS DRAWING, IN WHOLE OR IN PART, IS HEREBY PROHIBITED EXCEPT AS SPECIFIED IN WRITING BY GLOBTEK, INC. © GlobTek, Inc. 2018 - 2024

guest / 05/27/2024 4:11:25 PM GMT CLONED FROM RR9KA4500T00-IMR6B

GlobTek, Inc. www.globtek.com 186 Veterans Drive, Northvale, NJ 07647 Tel. (201) 784-1000 Fax (201) 784-0111	Drawing Title: GTM96300-3624-T2, Medical/ICT/ITE/Household use Power Supply, Efficiency Level: USA DOE Level VI / Eco-design Directive 2009/125/EC, (EU) 2019/1782, Case Color/Style: GlobTek Black, Desktop/External, Regulated Switchmode AC-DC Power Supply AC Adaptor, Input Rating: 100-240V~, 50-60 Hz, IEC 60320/C8, , Output Rating: 36.00W, 24.0V@1.5A, Pin Out: Polarity Configuration T00 All plugs are Medical Grade, Locking, Polarized once installed, and single use only. Product demonstration link: https://en.globtek.com/news/t00-changeable-output-plug-system-for-power-supplies MOLDED CONNECTORS AVAILABLE, Output Configuration: 1500 mm, 18/2 Cond, Round Black, T-plug system (includes 5.5x2.5, 5.5x2.1, 3.5x1.3mm plugs in each kit), Ferrite: None, GlobTek Black, GT Cord # C3775, Blades/Input Cord: Not Applicable, Approvals:	
	Model No. GTM96300-3624-T2	
	Part No./Ordering No. TR9KI1500T00-IMR6B	Rev C

3D File Download https://www.globtek.com/dl/GTM96300-T2%20without%20a%20waterproof%20barrier.igs

Mechanical drawing

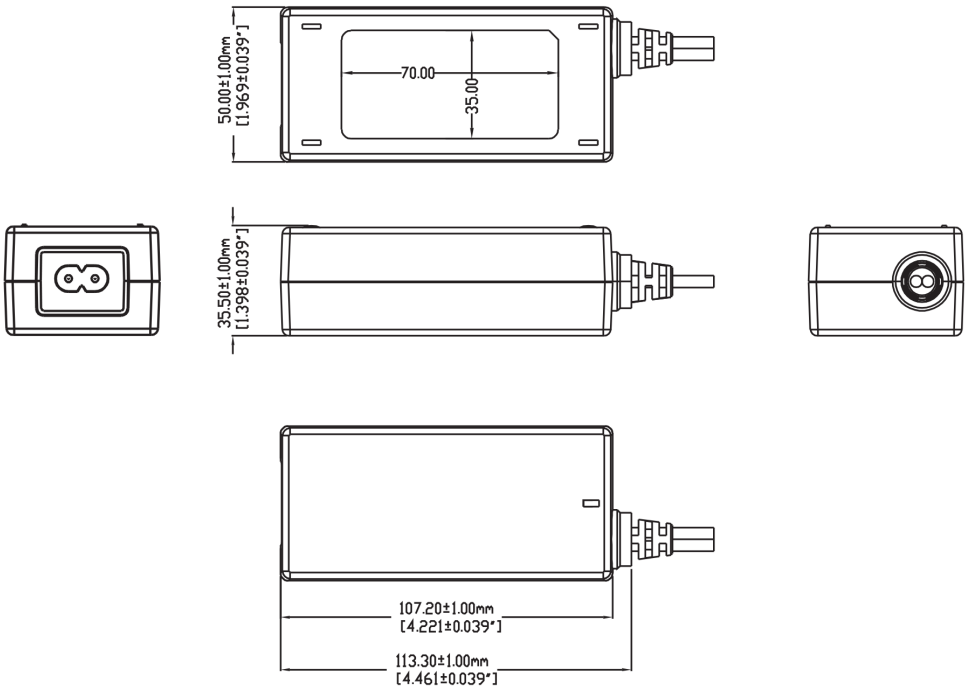

Alternative housing with waterproof barrier. Product PN# ends with suffix "RG"

PROPRIETARY INFORMATION
PROPRIETARY OF GLOBTEK, INC. ANY REPRODUCTION, DISCLOSURE OR USE OF THIS DRAWING, IN WHOLE OR IN PART, IS HEREBY PROHIBITED EXCEPT AS SPECIFIED IN WRITING BY GLOBTEK, INC. © GlobTek, Inc. 2018 - 2024
guest / 05/27/2024 4:11:25 PM GMT CLONED FROM RR9KA4500T00-IMR6B

GlobTek, Inc. www.globtek.com 186 Veterans Drive, Northvale, NJ 07647 Tel. (201) 784-1000 Fax (201) 784-0111	Drawing Title: GTM96300-3624-T2, Medical/ICT/ITE/Household use Power Supply, Efficiency Level: USA DOE Level VI / Eco-design Directive 2009/125/EC, (EU) 2019/1782, Case Color/Style: GlobTek Black, Desktop/External, Regulated Switchmode AC-DC Power Supply AC Adaptor, Input Rating: 100-240V~, 50-60 Hz, IEC 60320/C8, , Output Rating: 36.00W, 24.0V@1.5A, Pin Out: Polarity Configuration T00 All plugs are Medical Grade, Locking, Polarized once installed, and single use only. Product demonstration link: https://en.globtek.com/news/t00-changeable-output-plug-system-for-power-supplies MOLDED CONNECTORS AVAILABLE, Output Configuration: 1500 mm, 18/2 Cond, Round Black, T-plug system (includes 5.5x2.5, 5.5x2.1, 3.5x1.3mm plugs in each kit), Ferrite: None, GlobTek Black, GT Cord # C3775, Blades/Input Cord: Not Applicable, Approvals:	
	Model No. GTM96300-3624-T2	
	Part No./Ordering No. TR9KI1500T00-IMR6B	Rev C

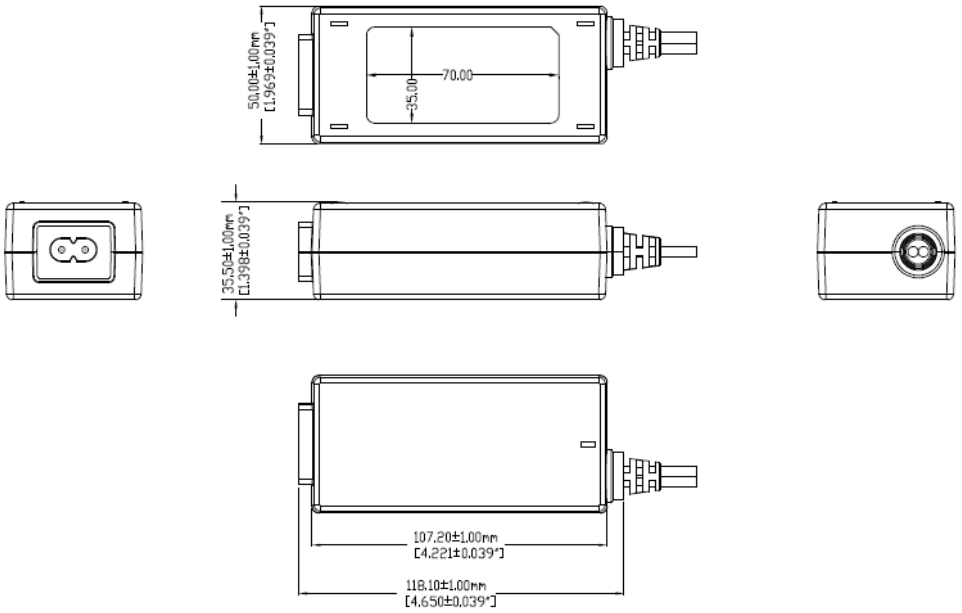

PROPRIETARY INFORMATION
PROPRIETARY OF GLOBTEK, INC. ANY REPRODUCTION, DISCLOSURE OR USE OF THIS DRAWING, IN WHOLE OR IN PART, IS HEREBY PROHIBITED EXCEPT AS SPECIFIED IN WRITING BY GLOBTEK, INC. © GlobTek, Inc. 2018 - 2024
guest / 05/27/2024 4:11:25 PM GMT CLONED FROM RR9KA4500T00-IMR6B

GlobTek, Inc.
www.globtek.com
186 Veterans Drive,
Northvale, NJ 07647
Tel. (201) 784-1000
Fax (201) 784-0111

Drawing Title: GTM96300-3624-T2, Medical/ICT/ITE/Household use Power Supply, Efficiency Level: USA DOE Level VI / Eco-design Directive 2009/125/EC, (EU) 2019/1782, Case Color/Style: GlobTek Black, Desktop/External, Regulated Switchmode AC-DC Power Supply AC Adaptor, Input Rating: 100-240V~, 50-60 Hz, IEC 60320/C8, , Output Rating: 36.00W, 24.0V@1.5A, Pin Out: Polarity Configuration T00 All plugs are Medical Grade, Locking, Polarized once installed, and single use only. Product demonstration link: https://en.globtek.com/news/t00-changeable-output-plug-system-for-power-supplies MOLDED CONNECTORS AVAILABLE, Output Configuration: 1500 mm, 18/2 Cond, Round Black, T-plug system (includes 5.5x2.5, 5.5x2.1, 3.5x1.3mm plugs in each kit), Ferrite: None, GlobTek Black, GT Cord # C3775, Blades/Input Cord: Not Applicable, Approvals:

Model No. GTM96300-3624-T2

Part No./Ordering No. TR9KI1500T00-IMR6B | Rev C

DERATING CURVE

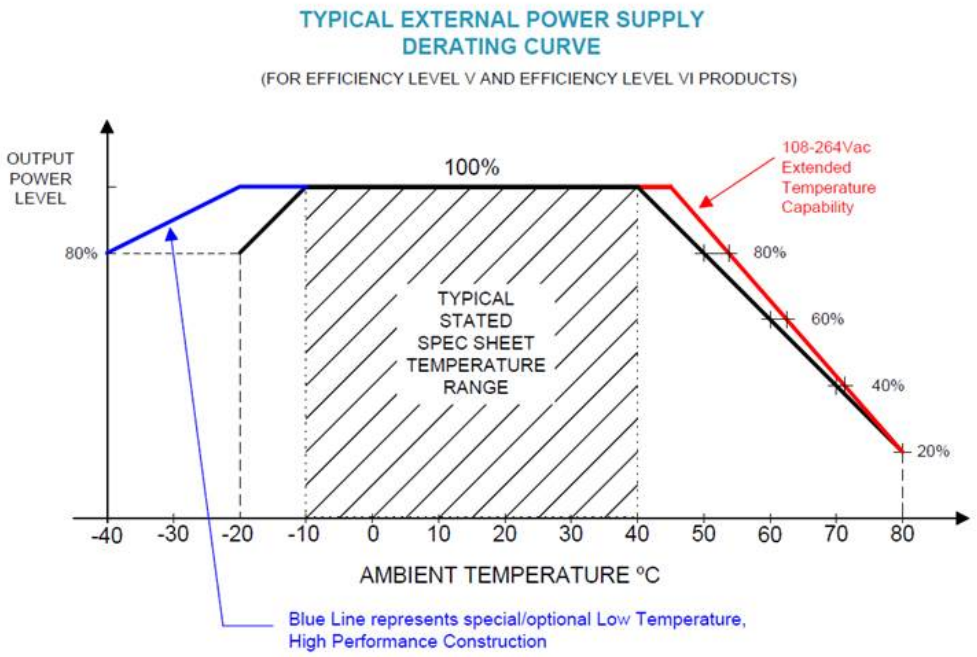

PROPRIETARY INFORMATION
PROPRIETARY OF GLOBTEK, INC. ANY REPRODUCTION, DISCLOSURE OR USE OF THIS DRAWING, IN WHOLE OR IN PART, IS HEREBY PROHIBITED EXCEPT AS SPECIFIED IN WRITING BY GLOBTEK, INC. © GlobTek, Inc. 2018 - 2024
guest / 05/27/2024 4:11:25 PM GMT CLONED FROM RR9KA4500T00-IMR6B

GlobTek, Inc.
www.globtek.com
186 Veterans Drive,
Northvale, NJ 07647
Tel. (201) 784-1000
Fax (201) 784-0111

Drawing Title: GTM96300-3624-T2, Medical/ICT/ITE/Household use Power Supply, Efficiency Level: USA DOE Level VI / Eco-design Directive 2009/125/EC, (EU) 2019/1782, Case Color/Style: GlobTek Black, Desktop/External, Regulated Switchmode AC-DC Power Supply AC Adaptor, Input Rating: 100-240V~, 50-60 Hz, IEC 60320/C8, , Output Rating: 36.00W, 24.0V@1.5A, Pin Out: Polarity Configuration T00 All plugs are Medical Grade, Locking, Polarized once installed, and single use only. Product demonstration link: https://en.globtek.com/news/t00-changeable-output-plug-system-for-power-supplies MOLDED CONNECTORS AVAILABLE, Output Configuration: 1500 mm, 18/2 Cond, Round Black, T-plug system (includes 5.5x2.5, 5.5x2.1, 3.5x1.3mm plugs in each kit), Ferrite: None, GlobTek Black, GT Cord # C3775, Blades/Input Cord: Not Applicable, Approvals:

Model No. GTM96300-3624-T2

Part No./Ordering No. TR9KI1500T00-IMR6B | Rev C

INPUT CONFIGURATION

(F1) Floating output, Class II / double insulated

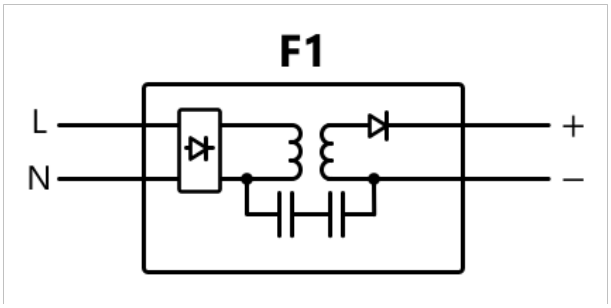

Alternate grounding configurations available upon request.

Blades/Cord Included:N/A:Not Applicable

Blades/Cord Installed:N/A:Not Applicable

T2 Inlet (IEC 60320/C8)
IEC 60320/C8 AC Inlet connector, Class II, Non-Earth Ground (aka "Figure-8")

PROPRIETARY INFORMATION
PROPRIETARY OF GLOBTEK, INC. ANY REPRODUCTION, DISCLOSURE OR USE OF THIS DRAWING, IN WHOLE OR IN PART, IS HEREBY PROHIBITED EXCEPT AS SPECIFIED IN WRITING BY GLOBTEK, INC. © GlobTek, Inc. 2018 - 2024
guest / 05/27/2024 4:11:25 PM GMT CLONED FROM RR9KA4500T00-IMR6B

GlobTek, Inc.
www.globtek.com
186 Veterans Drive,
Northvale, NJ 07647
Tel. (201) 784-1000
Fax (201) 784-0111

Drawing Title: GTM96300-3624-T2, Medical/ICT/ITE/Household use Power Supply, Efficiency Level: USA DOE Level VI / Eco-design Directive 2009/125/EC, (EU) 2019/1782, Case Color/Style: GlobTek Black, Desktop/External, Regulated Switchmode AC-DC Power Supply AC Adaptor, Input Rating: 100-240V~, 50-60 Hz, IEC 60320/C8, , Output Rating: 36.00W, 24.0V@1.5A, Pin Out: Polarity Configuration T00 All plugs are Medical Grade, Locking, Polarized once installed, and single use only. Product demonstration link: https://en.globtek.com/news/t00-changeable-output-plug-system-for-power-supplies MOLDED CONNECTORS AVAILABLE, Output Configuration: 1500 mm, 18/2 Cond, Round Black, T-plug system (includes 5.5x2.5, 5.5x2.1, 3.5x1.3mm plugs in each kit), Ferrite: None, GlobTek Black, GT Cord # C3775, Blades/Input Cord: Not Applicable, Approvals:

Model No. GTM96300-3624-T2

Part No./Ordering No. TR9KI1500T00-IMR6B | Rev C

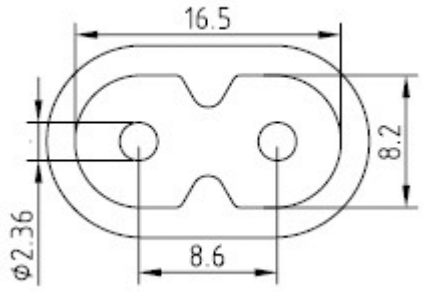

Mates with IEC 60320/C7 Plug

Below are standard cordsets which are "not included" (unless stated above); these may be purchased separately or packaged with the power supply. Please contact your Sales Engineer if the style required is not shown below. Many more available in different lengths, colors or cable material.

Standard International IEC 320/C7 Cordsets

Part Number	Type	Standard	Connector	Length (mm)	Length (feet)
2094112M703(R)	Argentina (Type I)	IRAM 2063	IEC 320/C7	2000	7
5014112M703A(R)	Australian (Type I)	AS 3112	IEC 320/C7	2000	7
207B4111M8703(R)	Brazil (Type N)	NBR14136	IEC 320/C7	1800	6
4533501M8703(R)	China (Type A)	GB 2099.1	IEC 320/C7	1830	6
2074112M703A(R)	European (Type C)	CEE 7/16	IEC 320/C7	2000	7
2074112M703AEUSA(R)	European/South Africa Combo(Type C)	CEE 7/16	IEC 320/C7	2000	7
2084111M8703B(R)	India (Type D)	IS 1293	IEC 320/C7	1800	6
451J3401M8703(R)	Japan (Type A)	JIS 8303	IEC 320/C7	1830	6
2044112M703A(R)	Korea (Type C)	KS C8305	IEC 320/C7	2000	7
4511116F703A(R)	North America (Type A)	NEMA 1-15P	IEC 320/C7	1830	6
2084111M8703(R)	South Africa (Type M)	BS 546	IEC320/C7	1830	6
4033401M8703A(R)	Taiwan (Type A)	CNS690	IEC 320/C7	1830	6
6104112M703A(R)	UK, Hong Kong, Singapore, Gulf States (Type G)	BS1363	IEC 320/C7	2000	7
451G1116F703A(R)	Gulf States (Kuwait, Bahrain, Oman, Qatar, Saudi Arabia, Yemen and the United Arab Emirates (UAE)(Type A)	Nema 1-15P	IEC320/C7	1830	6
6303742M5703(R)	Thailand (Type C)	TIS 166-2549	IEC320/C7	2500	8

PROPRIETARY INFORMATION
PROPRIETARY OF GLOBTEK, INC. ANY REPRODUCTION, DISCLOSURE OR USE OF THIS DRAWING, IN WHOLE OR IN PART, IS HEREBY PROHIBITED EXCEPT AS SPECIFIED IN WRITING BY GLOBTEK, INC. © GlobTek, Inc. 2018 - 2024
guest / 05/27/2024 4:11:25 PM GMT CLONED FROM RR9KA4500T00-IMR6B

GlobTek, Inc. www.globtek.com 186 Veterans Drive, Northvale, NJ 07647 Tel. (201) 784-1000 Fax (201) 784-0111	Drawing Title: GTM96300-3624-T2, Medical/ICT/ITE/Household use Power Supply, Efficiency Level: USA DOE Level VI / Eco-design Directive 2009/125/EC, (EU) 2019/1782, Case Color/Style: GlobTek Black, Desktop/External, Regulated Switchmode AC-DC Power Supply AC Adaptor, Input Rating: 100-240V~, 50-60 Hz, IEC 60320/C8, , Output Rating: 36.00W, 24.0V@1.5A, Pin Out: Polarity Configuration T00 All plugs are Medical Grade, Locking, Polarized once installed, and single use only. Product demonstration link: https://en.globtek.com/news/t00-changeable-output-plug-system-for-power-supplies MOLDED CONNECTORS AVAILABLE, Output Configuration: 1500 mm, 18/2 Cond, Round Black, T-plug system (includes 5.5x2.5, 5.5x2.1, 3.5x1.3mm plugs in each kit), Ferrite: None, GlobTek Black, GT Cord # C3775, Blades/Input Cord: Not Applicable, Approvals:	
	Model No. GTM96300-3624-T2	
	Part No./Ordering No. TR9KI1500T00-IMR6B	Rev C

OUTPUT CORD AND CONNECTOR: T00/C3775

ACTUAL CONNECTORS, OVERMOLDS, FERRITES MAY VARY SLIGHTLY FROM THE PICTURE BELOW

CABLE TYPE	Round Black
CABLE LENGTH (mm)	1500
CABLE TOLERANCE (mm)	± 50
WIRE GAUGE (AWG)	18
CONDUCTORS	2
HANK DIMENSION (mm)	80 ± 10
CABLE / CONNECTOR OVERMOLD COLOR	GlobTek Black
FERRITE TYPE AND DIMENSION	None
FERRITE NUMBER OF TURNS(Definition)	N/A
FERRITE DIMENSION FROM STRAIN RELIEF	N/A
FERRITE DIMENSION FROM PLUG	N/A
PLUG TYPE	T-plug system (includes 5.5x2.5, 5.5x2.1, 3.5x1.3mm plugs in each kit)
OUTPUT CONNECTOR GENDER	not applicable
OVERMOLDED	Yes
OVER MOLD ORIENTATION	Straight
CONNECTOR PIN OUT	Polarity Configuration T00 All plugs are Medical Grade, Locking, Polarized once installed, and single use only. Product demonstration link: https://en.globtek.com/news/t00-changeable-output-plug-system-for-power-supplies MOLDED CONNECTORS AVAILABLE

This novel system allows for rapid shipment of prototype samples or small quantities of common output voltage and current which can fullfill the needs of most common barrel plug specs. The table below explains the standard and non standard options available as part of this system. This system also allows for both Center Positive and Center Negative polarity.
The T00 plug and adapters are Medical Grade, single use only, Polarized after installation, and not removable without use of special tool.
Any of the below options, and more, are available as molded plugs from stock or special order. Please contact GlobTek for more information.

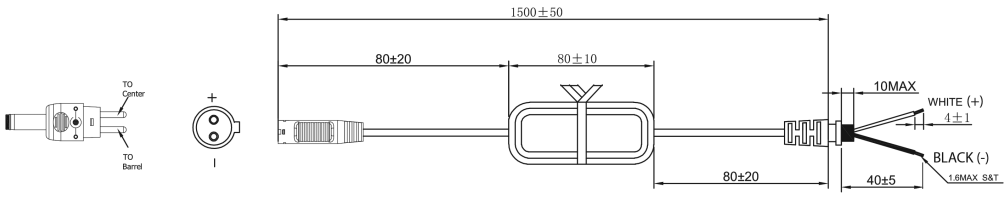

Cable OD 4.8 ± 0.15 mm
Individual conductor (Black & White) OD value of this 18 AWG cable is 2.0 ± 0.1 mm

PROPRIETARY INFORMATION
PROPRIETARY OF GLOBTEK, INC. ANY REPRODUCTION, DISCLOSURE OR USE OF THIS DRAWING, IN WHOLE OR IN PART, IS HEREBY PROHIBITED EXCEPT AS SPECIFIED IN WRITING BY GLOBTEK, INC. © GlobTek, Inc. 2018 - 2024
guest / 05/27/2024 4:11:25 PM GMT CLONED FROM RR9KA4500T00-IMR6B

GlobTek, Inc. www.globtek.com 186 Veterans Drive, Northvale, NJ 07647 Tel. (201) 784-1000 Fax (201) 784-0111	Drawing Title: GTM96300-3624-T2, Medical/ICT/ITE/Household use Power Supply, Efficiency Level: USA DOE Level VI / Eco-design Directive 2009/125/EC, (EU) 2019/1782, Case Color/Style: GlobTek Black, Desktop/External, Regulated Switchmode AC-DC Power Supply AC Adaptor, Input Rating: 100-240V~, 50-60 Hz, IEC 60320/C8, , Output Rating: 36.00W, 24.0V@1.5A, Pin Out: Polarity Configuration T00 All plugs are Medical Grade, Locking, Polarized once installed, and single use only. Product demonstration link: https://en.globtek.com/news/t00-changeable-output-plug-system-for-power-supplies MOLDED CONNECTORS AVAILABLE, Output Configuration: 1500 mm, 18/2 Cond, Round Black, T-plug system (includes 5.5x2.5, 5.5x2.1, 3.5x1.3mm plugs in each kit), Ferrite: None, GlobTek Black, GT Cord # C3775, Blades/Input Cord: Not Applicable, Approvals:	
	Model No. GTM96300-3624-T2	
	Part No./Ordering No. TR9KI1500T00-IMR6B	Rev C

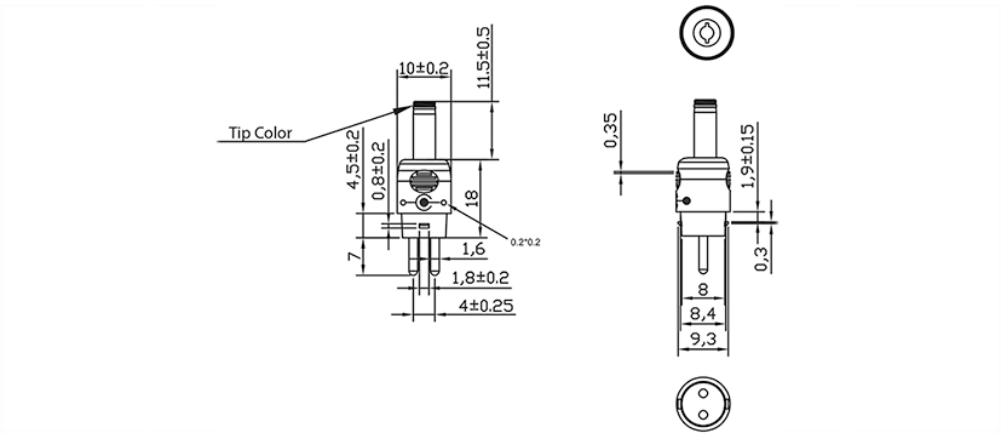

Option upon request: STRAIGHT Female Barrels are available for special order in any length between 9mm-14mm

This novel system allows for rapid shipment of prototype samples or small quantities of common output voltage and current which can fulfill the needs of most common barrel plug as well as male plug specs. The table explains the standard and non-standard options available as part of this system. This system also allows for both Center Positive and Center Negative
polarity.

The T00 plug and adapters are Medical Grade, single use only, Polarized after installation, and not removable without use of special tool.

Any of the below options, and more, are available as molded plugs from stock or special order. Please contact GlobTek for more information

---

ADDITIONAL OUTPUT PLUG OPTIONS ARE AVAILABLE AT https://www.globtek.com/en/connectors
STANDARD PLUGS AND CONNECTORS CAN BE SEEN ONLINE AT https://www.globtek.com/en/connectors
CALCULATE VOLTAGE REGULATION/DROP WITH OUR ONLINE CALCULATOR: https://www.globtek.com/r2/PtqjjL

PROPRIETARY INFORMATION
PROPRIETARY OF GLOBTEK, INC. ANY REPRODUCTION, DISCLOSURE OR USE OF THIS DRAWING, IN WHOLE OR IN PART, IS HEREBY PROHIBITED EXCEPT AS SPECIFIED IN WRITING BY GLOBTEK, INC. © GlobTek, Inc. 2018 - 2024
guest / 05/27/2024 4:11:25 PM GMT CLONED FROM RR9KA4500T00-IMR6B

GlobTek, Inc.
www.globtek.com
186 Veterans Drive,
Northvale, NJ 07647
Tel. (201) 784-1000
Fax (201) 784-0111

Drawing Title: GTM96300-3624-T2, Medical/ICT/ITE/Household use Power Supply, Efficiency Level: USA DOE Level VI / Eco-design Directive 2009/125/EC, (EU) 2019/1782, Case Color/Style: GlobTek Black, Desktop/External, Regulated Switchmode AC-DC Power Supply AC Adaptor, Input Rating: 100-240V~, 50-60 Hz, IEC 60320/C8, , Output Rating: 36.00W, 24.0V@1.5A, Pin Out: Polarity Configuration T00 All plugs are Medical Grade, Locking, Polarized once installed, and single use only. Product demonstration link: https://en.globtek.com/news/t00-changeable-output-plug-system-for-power-supplies MOLDED CONNECTORS AVAILABLE, Output Configuration: 1500 mm, 18/2 Cond, Round Black, T-plug system (includes 5.5x2.5, 5.5x2.1, 3.5x1.3mm plugs in each kit), Ferrite: None, GlobTek Black, GT Cord # C3775, Blades/Input Cord: Not Applicable, Approvals:	
Model No. GTM96300-3624-T2	
Part No./Ordering No. TR9KI1500T00-IMR6B	Rev C

OUTPUT CONNECTOR HOOK UP

TO ADDRESS SYSTEM-LEVEL EMI CONCERNS, FERRITE CHOKES/BEADS MAY BE ADDED/REVISED UPON REQUEST. A SAMPLE KIT OF GLOBTEK'S STANDARD FERRITES IS AVAILABLE UNDER GLOBTEK P/N: EMI-MITIGATION-KIT1

FOR ADDITIONAL INFORMATION, PLEASE READ OUR WHITE PAPER AT:
https://www.globtek.com/en/technical-articles/ferrite-kit-radiated-emi-suppression-kit-for-globtek-power-supplies-cable-assemblies

PROPRIETARY INFORMATION
PROPRIETARY OF GLOBTEK, INC. ANY REPRODUCTION, DISCLOSURE OR USE OF THIS DRAWING, IN WHOLE OR IN PART, IS HEREBY PROHIBITED EXCEPT AS SPECIFIED IN WRITING BY GLOBTEK, INC. © GlobTek, Inc. 2018 - 2024
guest / 05/27/2024 4:11:25 PM GMT CLONED FROM RR9KA4500T00-IMR6B

GlobTek, Inc. www.globtek.com 186 Veterans Drive, Northvale, NJ 07647 Tel. (201) 784-1000 Fax (201) 784-0111	Drawing Title: GTM96300-3624-T2, Medical/ICT/ITE/Household use Power Supply, Efficiency Level: USA DOE Level VI / Eco-design Directive 2009/125/EC, (EU) 2019/1782, Case Color/Style: GlobTek Black, Desktop/External, Regulated Switchmode AC-DC Power Supply AC Adaptor, Input Rating: 100-240V~, 50-60 Hz, IEC 60320/C8, , Output Rating: 36.00W, 24.0V@1.5A, Pin Out: Polarity Configuration T00 All plugs are Medical Grade, Locking, Polarized once installed, and single use only. Product demonstration link: https://en.globtek.com/news/t00-changeable-output-plug-system-for-power-supplies MOLDED CONNECTORS AVAILABLE, Output Configuration: 1500 mm, 18/2 Cond, Round Black, T-plug system (includes 5.5x2.5, 5.5x2.1, 3.5x1.3mm plugs in each kit), Ferrite: None, GlobTek Black, GT Cord # C3775, Blades/Input Cord: Not Applicable, Approvals:	
	Model No. GTM96300-3624-T2	
	Part No./Ordering No. TR9KI1500T00-IMR6B	Rev C

LABEL:L-1186

LABEL P/N	Standard GT
MATERIAL	Flat Thermal Transfer, Imprintable, Polyester Label and/or Pad Printed and/or Molded, and/or Laser Engraved in the case
BACKGROUND COLOR	Black if housing is Black, White or Silver if housing is White or Gray.
TEXT COLOR	White or Silver if label is Black Background for Black housing. Black if label is White or Silver background and Housing is White or Gray.
LABEL WIDTH (mm)	35.0
LABEL HEIGHT (mm)	70.0
SPECIAL BARCODE LABEL MATERIAL	No

Below is the minimum information which will appear on the label. NOTE: in the logo area additional/actual positioning of symbols and text is subjected to change as per agency updates/requirements or additional model approvals become available.
Regulatory certifications/label markings may be in logo area on the label or molded into the case housing outside the label area.
Information will be shown via label and/or pad printed and/or molded and/or laser engraved in the case. * Date code markings at GlobTek option
.

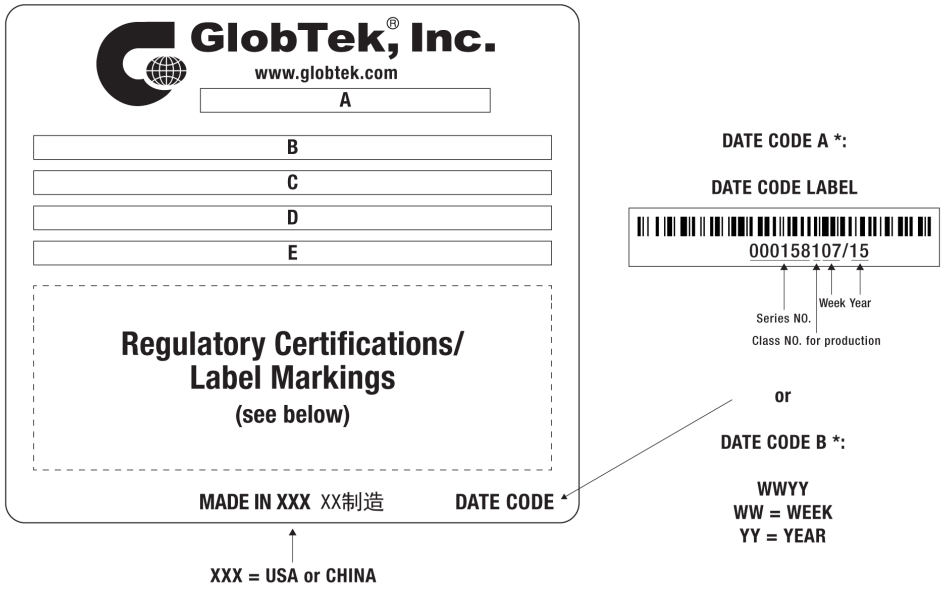

A=Medical/ICT/ITE/Household use Power Supply
B=P/N: (料号) TR9KI1500T00-IMR6B
C=Model (型号) GTM96300-3624-T2
D=Input (输入)100-240V~, 50-60 Hz, 1A
E=Output (输出)24.0 V ⎓ 1.5 A, 36.00W

PROPRIETARY INFORMATION
PROPRIETARY OF GLOBTEK, INC. ANY REPRODUCTION, DISCLOSURE OR USE OF THIS DRAWING, IN WHOLE OR IN PART, IS HEREBY PROHIBITED EXCEPT AS SPECIFIED IN WRITING BY GLOBTEK, INC. © GlobTek, Inc. 2018 - 2024
guest / 05/27/2024 4:11:25 PM GMT CLONED FROM RR9KA4500T00-IMR6B

AGENCY ONLINE DOCUMENTS	http://www.globtek.info/certs/GTM96300-TZ/
CE EC-Declaration for Medical	https://cs.globtek.info/ec_declaration_product?id=01t0c000008IWDW&m=1
CE EC-Declaration for Industrial/Commercial/ITE	https://cs.globtek.info/ec_declaration_product?id=01t0c000008IWDW&i=2
CE EC-Declaration for Household	https://cs.globtek.info/ec_declaration_product?id=01t0c000008IWDW&h=2
UKCA-Declaration for Medical	https://cs.globtek.info/ukca_declaration_product?id=01t0c000008IWDW&m=1
UKCA-Declaration for Industrial/Commercial/ITE	https://cs.globtek.info/ukca_declaration_product?id=01t0c000008IWDW&i=2
UKCA-Declaration for Household	https://cs.globtek.info/ukca_declaration_product?id=01t0c000008IWDW&h=2
Morocco SDoC Declaration	https://cs.globtek.info/Morocco_SDoC_Declaration?id=a0Oa000000FkW9EEAV
RoHS/RoHS3 Declaration	https://www.globtek.com/pdf/rohs_cert/01t0c000008IWDWAA2
REACH Declaration	https://www.globtek.com/pdf/iso_certificates/REACH.pdf
Conflict Minerals Declaration	https://www.globtek.com/pdf/conflict-minerals.pdf
Prop 65 Statement	https://www.globtek.com/prop-65-statement.pdf

IPXY rating is based on 3rd party testing and customers should check suitability and test system level IPXY rating before ordering.

Regulatory Certifications/Label Markings

Below follows a link to the latest regulatory certifications and marks for this specific product. National standards as well as certification schemes are constantly changing and so is the set of certification marks and symbols applicable to this product. Various standards, marks and symbols, and certificates are subject to change at any time without notice.

Additional standards or unique country certifications are available upon request. Please contact Globtek to request a quotation.

LATEST PRODUCT/MODEL CERTIFICATIONS:	https://www.globtek.com/ds/TyWgrwZVjDZ/PsW9TBYRhop.html
AGENCY ONLINE DOCUMENTS	http://www.globtek.info/certs/GTM96300-TZ/



(F1) Floating output, Class II / double insulated



Polarity Configuration T00 All plugs are Medical Grade, Locking, Polarized once installed, and single use only.
Product demonstration link:
https://en.globtek.com/news/t00-changeable-output-plug-system-for-power-s

MOLDED CONNECTORS AVAILABLE

PROPRIETARY INFORMATION
PROPRIETARY OF GLOBTEK, INC. ANY REPRODUCTION, DISCLOSURE OR USE OF THIS DRAWING, IN WHOLE OR IN PART, IS HEREBY PROHIBITED EXCEPT AS SPECIFIED IN WRITING BY GLOBTEK, INC. © GlobTek, Inc. 2018 - 2024
guest / 05/27/2024 4:11:25 PM GMT CLONED FROM RR9KA4500T00-IMR6B

GlobTek, Inc.
www.globtek.com
186 Veterans Drive,
Northvale, NJ 07647
Tel. (201) 784-1000
Fax (201) 784-0111

Drawing Title: GTM96300-3624-T2, Medical/ICT/ITE/Household use Power Supply, Efficiency Level: USA DOE Level VI / Eco-design Directive 2009/125/EC, (EU) 2019/1782, Case Color/Style: GlobTek Black, Desktop/External, Regulated Switchmode AC-DC Power Supply AC Adaptor, Input Rating: 100-240V~, 50-60 Hz, IEC 60320/C8, , Output Rating: 36.00W, 24.0V@1.5A, Pin Out: Polarity Configuration T00 All plugs are Medical Grade, Locking, Polarized once installed, and single use only. Product demonstration link: https://en.globtek.com/news/t00-changeable-output-plug-system-for-power-supplies MOLDED CONNECTORS AVAILABLE, Output Configuration: 1500 mm, 18/2 Cond, Round Black, T-plug system (includes 5.5x2.5, 5.5x2.1, 3.5x1.3mm plugs in each kit), Ferrite: None, GlobTek Black, GT Cord # C3775, Blades/Input Cord: Not Applicable, Approvals:	
Model No. GTM96300-3624-T2	
Part No./Ordering No. TR9KI1500T00-IMR6B	Rev C

PACKAGING

Packing Spec P/N	Packing for DT plug model with T00 plug and manual
Box Qty	48
Gift Box Size (mm)	Egg Crate
Gift Box Color	White
Master Carton Size (mm)	442 x 330 x 275
Master Carton Cubic Volume (m^3)	0.04
Master GW (Kg)	15.2 kg
BLADES INCLUDED	N/A: Not Applicable
BLADE/CORD INSTALLED	N/A: Not Applicable
USER MANUAL*	809-DESKTOPUSERMANUAL on A4 paper
USER MANUAL WEB LINK	https://www.globtek.com/pdf/809-DESKTOPUSERMANUAL.jpg

* This specification sheet is considered the user manual for all applications. It is expected that the buyer of this product will use it to formulate their own user manual for their end product and a user manual specifically for the power adapter is not usually required. If a user manual is not specifically listed above then none will be provided with this unit.

PROPRIETARY INFORMATION
PROPRIETARY OF GLOBTEK, INC. ANY REPRODUCTION, DISCLOSURE OR USE OF THIS DRAWING, IN WHOLE OR IN PART, IS HEREBY PROHIBITED EXCEPT AS SPECIFIED IN WRITING BY GLOBTEK, INC. © GlobTek, Inc. 2018 - 2024
guest / 05/27/2024 4:11:25 PM GMT CLONED FROM RR9KA4500T00-IMR6B

GlobTek, Inc. www.globtek.com 186 Veterans Drive, Northvale, NJ 07647 Tel. (201) 784-1000 Fax (201) 784-0111	Drawing Title: GTM96300-3624-T2, Medical/ICT/ITE/Household use Power Supply, Efficiency Level: USA DOE Level VI / Eco-design Directive 2009/125/EC, (EU) 2019/1782, Case Color/Style: GlobTek Black, Desktop/External, Regulated Switchmode AC-DC Power Supply AC Adaptor, Input Rating: 100-240V~, 50-60 Hz, IEC 60320/C8, , Output Rating: 36.00W, 24.0V@1.5A, Pin Out: Polarity Configuration T00 All plugs are Medical Grade, Locking, Polarized once installed, and single use only. Product demonstration link: https://en.globtek.com/news/t00-changeable-output-plug-system-for-power-supplies MOLDED CONNECTORS AVAILABLE, Output Configuration: 1500 mm, 18/2 Cond, Round Black, T-plug system (includes 5.5x2.5, 5.5x2.1, 3.5x1.3mm plugs in each kit), Ferrite: None, GlobTek Black, GT Cord # C3775, Blades/Input Cord: Not Applicable, Approvals:	
	Model No. GTM96300-3624-T2	
	Part No./Ordering No. TR9KI1500T00-IMR6B	Rev C

If specific packaging is required, this section must specify all requirements and note “no exceptions”. If this section does not specify packaging, it is subject to change without notice at GlobTek’s discretion

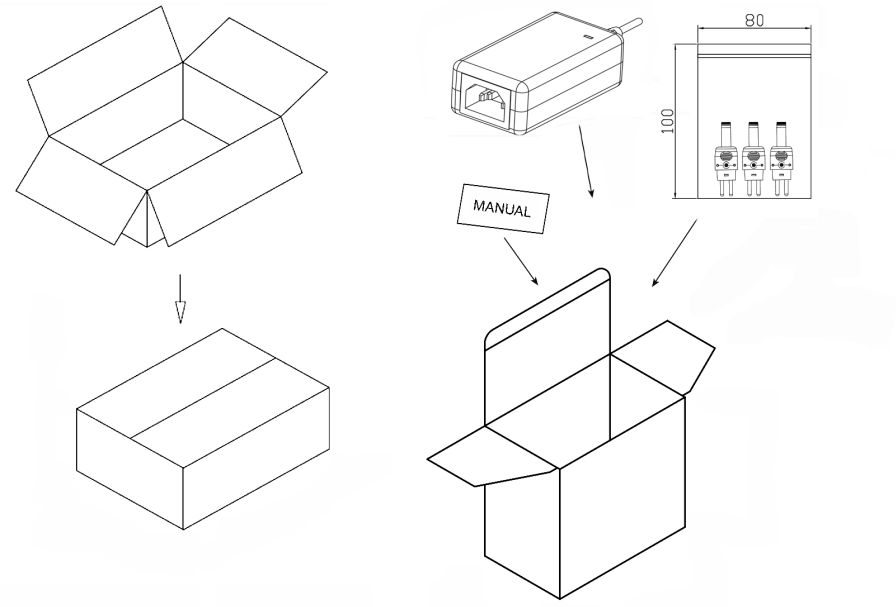

Manual for T00-plug:

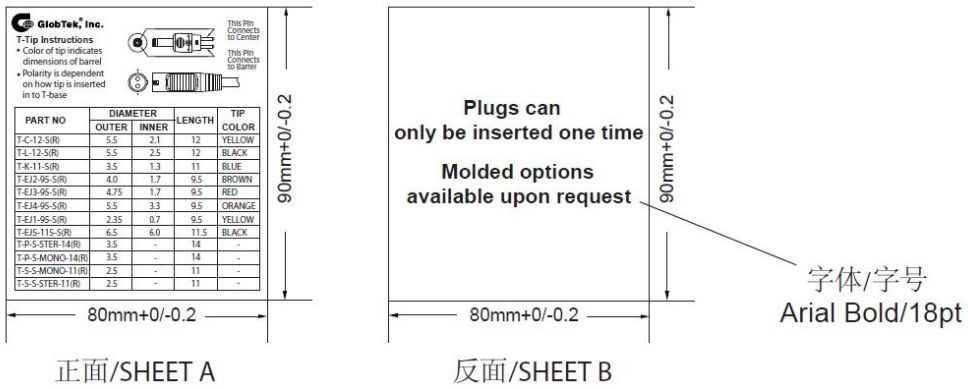

PROPRIETARY INFORMATION
PROPRIETARY OF GLOBTEK, INC. ANY REPRODUCTION, DISCLOSURE OR USE OF THIS DRAWING, IN WHOLE OR IN PART, IS HEREBY PROHIBITED EXCEPT AS SPECIFIED IN WRITING BY GLOBTEK, INC. © GlobTek, Inc. 2018 - 2024
guest / 05/27/2024 4:11:25 PM GMT CLONED FROM RR9KA4500T00-IMR6B

INSTRUCTIONS TO THE OEM SYSTEMS ENGINEER

It is the responsibility of the OEM systems engineer to provide the end system user instructions and warnings for the use of this product in the end system.

If an input cord is required for this product, AC Mains voltage should be provided to the power supply by a power supply cord approved to the national standards of the country in which it will be used.

This product is not designed to be repaired. No serviceable parts inside. A blown internal fuse is an indication of catastrophic failure of circuit component(s). If a Failure Analysis is required for a failed power supply/battery charger, please return the damaged unit to GlobTek for an accurate determination of the root cause of the failure.

EMC Compliance of the complete OEM product, including the GlobTek power supply/battery charger needs to be verified by the OEM systems engineer.

PROPRIETARY INFORMATION

PROPRIETARY OF GLOBTEK, INC. ANY REPRODUCTION, DISCLOSURE OR USE OF THIS DRAWING, IN WHOLE OR IN PART, IS HEREBY PROHIBITED EXCEPT AS SPECIFIED IN WRITING BY GLOBTEK, INC. © GlobTek, Inc. 2018 - 2024

guest / 05/27/2024 4:11:25 PM GMT CLONED FROM RR9KA4500T00-IMR6B

GlobTek, Inc.
www.globtek.com
186 Veterans Drive,
Northvale, NJ 07647
Tel. (201) 784-1000
Fax (201) 784-0111

Drawing Title: GTM96300-3624-T2, Medical/ICT/ITE/Household use Power Supply, Efficiency Level: USA DOE Level VI / Eco-design Directive 2009/125/EC, (EU) 2019/1782, Case Color/Style: GlobTek Black, Desktop/External, Regulated Switchmode AC-DC Power Supply AC Adaptor, Input Rating: 100-240V~, 50-60 Hz, IEC 60320/C8, , Output Rating: 36.00W, 24.0V@1.5A, Pin Out: Polarity Configuration T00 All plugs are Medical Grade, Locking, Polarized once installed, and single use only. Product demonstration link: https://en.globtek.com/news/t00-changeable-output-plug-system-for-power-supplies MOLDED CONNECTORS AVAILABLE, Output Configuration: 1500 mm, 18/2 Cond, Round Black, T-plug system (includes 5.5x2.5, 5.5x2.1, 3.5x1.3mm plugs in each kit), Ferrite: None, GlobTek Black, GT Cord # C3775, Blades/Input Cord: Not Applicable, Approvals:	
Model No. GTM96300-3624-T2	
Part No./Ordering No. TR9KI1500T00-IMR6B	Rev C

INSTRUCTION SHEET

N/A

PROPRIETARY INFORMATION
PROPRIETARY OF GLOBTEK, INC. ANY REPRODUCTION, DISCLOSURE OR USE OF THIS DRAWING, IN WHOLE OR IN PART, IS HEREBY PROHIBITED EXCEPT AS SPECIFIED IN WRITING BY GLOBTEK, INC. © GlobTek, Inc. 2018 - 2024
guest / 05/27/2024 4:11:25 PM GMT CLONED FROM RR9KA4500T00-IMR6B

GlobTek, Inc.
www.globtek.com
186 Veterans Drive,
Northvale, NJ 07647
Tel. (201) 784-1000
Fax (201) 784-0111

Drawing Title: GTM96300-3624-T2, Medical/ICT/ITE/Household use Power Supply, Efficiency Level: USA DOE Level VI / Eco-design Directive 2009/125/EC, (EU) 2019/1782, Case Color/Style: GlobTek Black, Desktop/External, Regulated Switchmode AC-DC Power Supply AC Adaptor, Input Rating: 100-240V~, 50-60 Hz, IEC 60320/C8, , Output Rating: 36.00W, 24.0V@1.5A, Pin Out: Polarity Configuration T00 All plugs are Medical Grade, Locking, Polarized once installed, and single use only. Product demonstration link: https://en.globtek.com/news/t00-changeable-output-plug-system-for-power-supplies MOLDED CONNECTORS AVAILABLE, Output Configuration: 1500 mm, 18/2 Cond, Round Black, T-plug system (includes 5.5x2.5, 5.5x2.1, 3.5x1.3mm plugs in each kit), Ferrite: None, GlobTek Black, GT Cord # C3775, Blades/Input Cord: Not Applicable, Approvals:	
Model No. GTM96300-3624-T2	
Part No./Ordering No. TR9KI1500T00-IMR6B	Rev C

PROPRIETARY INFORMATION
PROPRIETARY OF GLOBTEK, INC. ANY REPRODUCTION, DISCLOSURE OR USE OF THIS DRAWING, IN WHOLE OR IN PART, IS HEREBY PROHIBITED EXCEPT AS SPECIFIED IN WRITING BY GLOBTEK, INC. © GlobTek, Inc. 2018 - 2024

guest / 05/27/2024 4:11:25 PM GMT CLONED FROM RR9KA4500T00-IMR6B