MURR ELEKTRONIK
stay connected

M12 male recept. A-cod. rear

TPE-wires 12x0.14 0.5m

Flange male
M12, 12-pole
Rear mounting
with multi-strand wire

Link to Product

Illustration



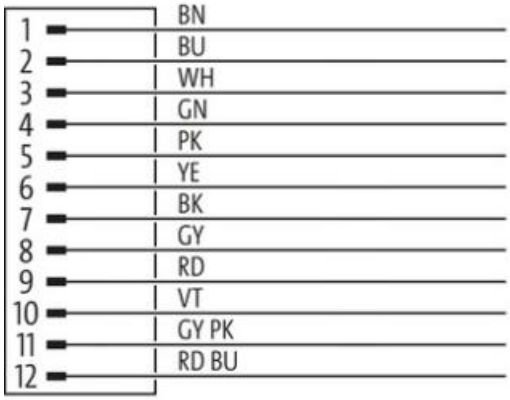

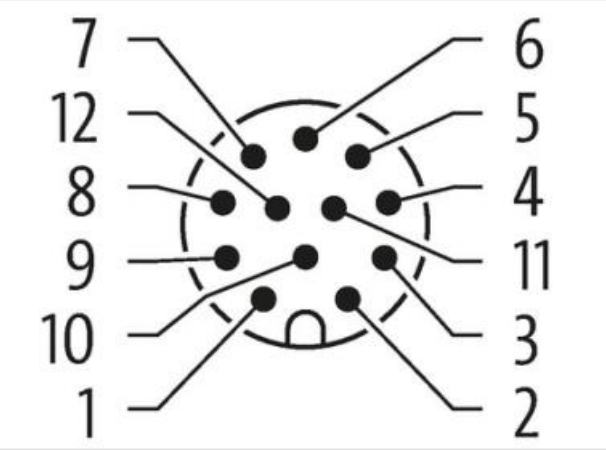

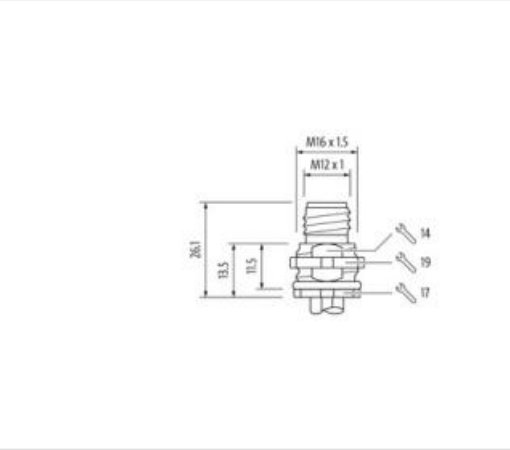

Product may differ from Image

Cable length	0,5 m

Side 1

Tightening torque	0,6 Nm
Mounting method	inserted, screwed
Coating contact	gold plated

The information in this Product-PDF has been compiled with the utmost care.
Liability for the correctness completeness and topicality of the information is restricted to gross negligence. Version: 2024-07-04

Murrelektronik Inc. | 1327 Northbrook Parkway, Suite 460 | Suwanee, GA 30024 | Fon +1 770 497-9292 | Fax +1 770 497-9391 | shop@murrinc.com | shop.murrinc.com

MURR ELEKTRONIK
stay connected

Family construction form	M12
Thread	M12 x 1
Coding	A
Material contact	Copper alloy
Material	Brass
No. of poles	12
Degree of protection (EN IEC 60529)	IP67
Side 2	
Coating contact	gold plated
Commercial data	
ECLASS-6.0	27279220
ECLASS-6.1	27279220
ECLASS-7.0	27440103
ECLASS-8.0	27440103
ECLASS-9.0	27440103
ECLASS-10.1	27440103
ECLASS-11.1	27440103
ECLASS-12.0	27440103
ETIM-5.0	EC001855
customs tariff number	85444290
GTIN	4048879332255
Packaging unit	1
Electrical data | Supply	
Operating voltage AC max.	30 V
Operating voltage DC max.	30 V
Current operating per contact max.	1,5 A
Diagnostics	
Status indication LED	no
Installation | Connection	
Mounting set	M16 x 1.5
Width across flats	SW19
Device protection | Electrical	
Protection NEMA	3, 4, 6P
Additional condition protection degree	inserted, screwed
Pollution Degree	3
Rated surge voltage	0,8 kV
Material group (IEC 60664-1)	I
Mechanical data | Material data	
Coating locking	nickel plated
Coating of fitting	nickel plated
Locking material	Brass
Material screw connection	Brass
Mechanical data | Mounting data	
Mounting method	inserted, screwed
Environmental characteristics | Climatic	
Operating temperature min.	-25 °C
Operating temperature max.	85 °C
Additional condition temperature range	depending on cable quality
Important installation notes	
Note on strain relief	Protect the connectors by suitable measures from mechanical loads, e.g. by the usage of cable ties.

The information in this Product-PDF has been compiled with the utmost care.
Liability for the correctness completeness and topicality of the information is restricted to gross negligence. Version: 2024-07-04

Note on bending radius	**Attention:** Observe the permissible bending radii when laying cables, as the IP protection class can be endangered by excessive bending forces.
Approvals	
UL 50E	yes
Installation | Cable	
wire arrangement	brown, blue, white, green, pink, yellow, black, gray, red, violet, gray-pink, red-blue
Cable identification	979
wire arrangement	brown, blue, white, green, pink, yellow, black, gray, red, violet, gray-pink, red-blue
Material wire insulation	PP
Amount wires	12
Outer diameter insulation	1,25 mm
Outer diameter tolerance core insulation	± 5 %
Conductor crosssection (wire)	0,14 mm²
Min. operating temperature (static)	-40 °C
Max. operating temperature (fixed)	85 °C
Operating temperature min. (dynamic)	-25 °C
Operating temperature max. (dynamic)	85 °C
Flame resistance	IEC 60332-2-2 | UL 1581 § 1090 | UL 1581 § 1100 FT2
chemical resistance	Good, application-related testing
Gasoline resistance	Good, application-related testing
Oil resistance	DIN EN 60811-404 | Good, application-related testing
Bending radius (fixed)	5 x Outer diameter
Bending radius (dynamic)	15 x Outer diameter

The information in this Product-PDF has been compiled with the utmost care.
Liability for the correctness completeness and topicality of the information is restricted to gross negligence. Version: 2024-07-04