GlobTek, Inc.
www.globtek.com
186 Veterans Drive,
Northvale, NJ 07647
Tel. (201) 784-1000
Fax (201) 784-0111

Drawing Title: GT-83082-3612-W2E, ICT/ITE Power Supply, Efficiency Level: USA DOE Level VI / Eco-design Directive 2009/125/EC, (EU) 2019/1782, Case Color/Style: GlobTek Black, Wall Plug-in, Regulated Switchmode AC-DC; Current Limited Power Supply AC Adaptor, Input Rating: 100-240V~, 50-60 Hz, Euro Plug Fixed, , Output Rating: 36.00W, 12.0V@3.0A, Pin Out: Center Positive (+V), symbol compliant with IEC 60417 symbol no. 5926, Output Configuration: 1500 mm, 18/2 Cond, UL 2468, Female Barrel 5.5*2.1*11mm w/ Spring Clip & Locking Notch or Equal, Ferrite: None, GlobTek Black, GT Cord # C16021, Blades/Input Cord: Fixed Blades European CEE 7/16 2 Conductor, Approvals:	
Model No. GT-83082-3612-W2E	
Part No./Ordering No. WR9ME3000CCP-F(R6B)	Rev C

In Addition to GlobTek Inc.'s renewed ISO9001:2015 - Quality Management System Certification, GlobTek Inc. is now certified to:

ISO13485:2016 - Medical Devices Quality Management System Certification
ISO14001:2015 - Environmental Management System Certification

ISO Certificates are available online at https://www.globtek.com/iso-certificates/

The acceptance of this specification and use of the product described in this document indicates the acceptance and binding of the customer to Globtek TERMS AND CONDITIONS (attached to the end of this document), which supersede all other agreements, terms, and conditions (https://www.globtek.com/terms-and-conditions/).

The purchaser of this product (Customer) agrees that it is their sole responsibility to determine suitability/fitness of the product described in this specification for their application and to take precautions for protection against any hazards attendant to the handling and use of the product.

Footnote:

GlobTek Inc. will not be liable for the safety and performance of these power supplies/battery packs if unauthorized access and repair occurs. End user should consult applicable UL, CSA or EN standards for proper installation instruction.

Limitation of Use:

GlobTek products are intended for use with commercial, medical, and/or industrial equipment only. GlobTek product are not authorized for use as mission critical components in life support hazardous environment, nuclear or aircraft applications without prior written approval from the CEO of GlobTek Inc.
Contents of this document are subject to change without prior notice.

Customer Approval of Specification:

Please approve, sign and send back to GlobTek so we can complete order processing.
A delay in receipt of this form will delay delivery schedule.

Company Name:	Customer P/N:
Quote Number:	Date:
Authorized Representative Name:	Authorized Representative Signature:

PROPRIETARY INFORMATION
PROPRIETARY OF GLOBTEK, INC. ANY REPRODUCTION, DISCLOSURE OR USE OF THIS DRAWING, IN WHOLE OR IN PART, IS HEREBY PROHIBITED EXCEPT AS SPECIFIED IN WRITING BY GLOBTEK, INC. © GlobTek, Inc. 2015 - 2024
guest / 05/27/2024 4:10:01 PM GMT

GlobTek, Inc.
www.globtek.com
186 Veterans Drive,
Northvale, NJ 07647
Tel. (201) 784-1000
Fax (201) 784-0111

Drawing Title: GT-83082-3612-W2E, ICT/ITE Power Supply, Efficiency Level: USA DOE Level VI / Eco-design Directive 2009/125/EC, (EU) 2019/1782, Case Color/Style: GlobTek Black, Wall Plug-in, Regulated Switchmode AC-DC; Current Limited Power Supply AC Adaptor, Input Rating: 100-240V~, 50-60 Hz, Euro Plug Fixed, , Output Rating: 36.00W, 12.0V@3.0A, Pin Out: Center Positive (+V), symbol compliant with IEC 60417 symbol no. 5926, Output Configuration: 1500 mm, 18/2 Cond, UL 2468, Female Barrel 5.5*2.1*11mm w/ Spring Clip & Locking Notch or Equal, Ferrite: None, GlobTek Black, GT Cord # C16021, Blades/Input Cord: Fixed Blades European CEE 7/16 2 Conductor, Approvals:	
Model No. GT-83082-3612-W2E	
Part No./Ordering No. WR9ME3000CCP-F(R6B)	Rev C

REVISION HISTORY

REV	DESCRIPTION	SUB	DATE	APPROVED
C	Update output cord Update packaging Update approval: update Ukraine No., remove GoST	rchiu	10/17/2017	QA
A	Initial release	QA	10/21/2015	QA
B	Update model from GT-86360-3612-W2E to GT-83082-3612-W2E, packing dimensions	QA	10/21/2015	QA

POWER SUPPLY INFORMATION

TYPE	Wall Plug-in
TECHNOLOGY	Regulated Switchmode AC-DC; Current Limited Power Supply AC Adaptor
CASE COLOR	GlobTek Black
NAMEPLATE RATED INPUT	100-240V~, 50-60 Hz, 1.0A
INPUT CONFIG	Euro Plug Fixed
WATTS	36.00
VOLTS OUT	12.0
CURRENT OUT (Amps)	3.0
BLADE/CORD INCLUDED	FBEuro2 Fixed Blades European CEE 7/16 2 Conductor
BLADE/CORD INSTALLED	FBEuro2 :Fixed Blades European CEE 7/16 2 Conductor
INGRESS PROTECTION	
GROUNDING CONFIGURATION	(F1) Floating output, Class II / double insulated
EFFICIENCY LEVEL	USA DOE Level VI / Eco-design Directive 2009/125/EC, (EU) 2019/1782
OUTPUT CONFIGURATION	1500 mm, 18/2 Cond, UL 2468, Female Barrel 5.5*2.1*11mm w/ Spring Clip & Locking Notch or Equal, Ferrite: None, GlobTek Black, GT Cord # C16021
OVERMOLDED	Yes
CONNECTOR PIN OUT	Center Positive (+V), symbol compliant with IEC 60417 symbol no. 5926
LABEL SPECS	Standard GT,L-1186
SPECIAL BARCODE LABEL MATERIAL	No
PACK SPEC	Standard GT-83082, User manual
USER MANUAL	809-DESKTOPUSERMANUAL on A4 paper

PROPRIETARY INFORMATION
PROPRIETARY OF GLOBTEK, INC. ANY REPRODUCTION, DISCLOSURE OR USE OF THIS DRAWING, IN WHOLE OR IN PART, IS HEREBY PROHIBITED EXCEPT AS SPECIFIED IN WRITING BY GLOBTEK, INC. © GlobTek, Inc. 2015 - 2024
guest / 05/27/2024 4:10:01 PM GMT

GlobTek, Inc.
www.globtek.com
186 Veterans Drive,
Northvale, NJ 07647
Tel. (201) 784-1000
Fax (201) 784-0111

Drawing Title: GT-83082-3612-W2E, ICT/ITE Power Supply, Efficiency Level: USA DOE Level VI / Eco-design Directive 2009/125/EC, (EU) 2019/1782, Case Color/Style: GlobTek Black, Wall Plug-in, Regulated Switchmode AC-DC; Current Limited Power Supply AC Adaptor, Input Rating: 100-240V~, 50-60 Hz, Euro Plug Fixed, , Output Rating: 36.00W, 12.0V@3.0A, Pin Out: Center Positive (+V), symbol compliant with IEC 60417 symbol no. 5926, Output Configuration: 1500 mm, 18/2 Cond, UL 2468, Female Barrel 5.5*2.1*11mm w/ Spring Clip & Locking Notch or Equal, Ferrite: None, GlobTek Black, GT Cord # C16021, Blades/Input Cord: Fixed Blades European CEE 7/16 2 Conductor, Approvals:	
Model No. GT-83082-3612-W2E	
Part No./Ordering No. WR9ME3000CCP-F(R6B)	Rev C

Notes/Modifications/Customizations (notes in this section supersede the values shown in the standard spec)

DIMENSIONS ARE IN MM UNLESS SPECIFIED OTHERWISE

PROPRIETARY INFORMATION

PROPRIETARY OF GLOBTEK, INC. ANY REPRODUCTION, DISCLOSURE OR USE OF THIS DRAWING, IN WHOLE OR IN PART, IS HEREBY PROHIBITED EXCEPT AS SPECIFIED IN WRITING BY GLOBTEK, INC. © GlobTek, Inc. 2015 - 2024

guest / 05/27/2024 4:10:01 PM GMT

ELECTRICAL SPECIFICATIONS

01. Input Voltage: Specified 90-264 Vac, Nameplate rated: 100-240Vac
02. Input Frequency: Specified 47-63 Hz, Nameplate rated 50-60Hz
03. The adapter input/output are full range AC input and +12V DC with 36 watts maximum output.
04. NOMINAL AC INPUT VOLTAGE 1 A maximum, No damage shall be occurred and the input fuse shall not be blown up.
05. POWER CONSUMPTION: 115VAC/230VAC INPUT , power consumption less than 0.1W
06.200 mVp-p maximum Ripple and Noise:At 20 MHz, and output parallel with 0.1uF & 47uF capacitors to ground. Temperature at 25℃, and nominal input voltage (Optional 120 mVp-p maximum Ripple)
07. Turn-ON Delay: 3 Seconds maximum at nominal input voltage
08. Inrush Current: at full load, 25°C, cold start
09. RISE TIME: 100mS maximum at nominal input voltage
10.Efficiency: Compliant with Efficiency Level VI and CoC Tier 2 standards
11. No Load Standby Power: <0.075W @ 230Vac
12. Capacitance load ability(CR mode): 12V,Output set CR mode,and 4000uF capacitor @115Vac/60Hz and 230Vac/50Hz ; 0% and 100% load
13. OUTPUT REGULATION +/-5%

B) PROTECTION
01. Over-current protection
02. Over-voltage protection
03. Short-circuit protection:Short circuit protection is to be included in the construction of the adaptor. The adaptor is designed to withstand continuous current of a short circuit on the output. The adaptor will be short circuit tolerant for an indefinite period.

C) SAFETY
01. Dielectric Withstand Voltage: Primary To Secondary: 3000VAC 10mA 1minute or 4242VDC 10mA 1minute
02. 0.25mA maximum, at nominal AC input voltage and frequency
03. Touch Current: <0.25mA @ 240Vac input voltage

D) EMC
01. Emissions, per EN 55032, EN 61000-6-3, EN 61000-6-4
  Conducted Emissions: Class B, FCC Part 15, Class B
  Radiated Emissions: Class B, FCC Part 15, Class B
02. Line Frequency Harmonics EN61000-3-2, Class A
03. Voltage Fluctuations/Flicker EN61000-3-3
04. Immunity, per EN 55024, EN 61000-6-1, EN 61000-6-2
  Static Discharge Immunity EN61000-4-2, 4kV Contact Discharge, 8kV air discharge
  Radiated RF Immunity EN61000-4-3, 3V/m 80-1000MHz, 80% 1KHz AM.
  EFT/Burst Immunity EN61000-4-4, 1kV/100kHz.
  Line Surge Immunity EN61000-4-5, 1kV differential, 2kV common-mode
  Conducted RF Immunity EN61000-4-6, 3Vrms, 80% 1KHz AM
  Power Frequency Magnetic Field Immunity EN61000-4-8, 1A/m
  Voltage Dip Immunity EN61000-4-11, Criteria

PROPRIETARY INFORMATION
PROPRIETARY OF GLOBTEK, INC. ANY REPRODUCTION, DISCLOSURE OR USE OF THIS DRAWING, IN WHOLE OR IN PART, IS HEREBY PROHIBITED EXCEPT AS SPECIFIED IN WRITING BY GLOBTEK, INC. © GlobTek, Inc. 2015 - 2024
guest / 05/27/2024 4:10:01 PM GMT

E) OTHER:

01. MTBF: 200,000 Hours @ 25°C ambient temperature
02. Operating Temperature: -5 °C TO 45 °C
03. Operating Humidity: 20 ~ 85 % RH. non-condensing
05. Storage Temperature: -20 °C TO +80 °C
06. Storage Humidity:5 ~ 95 % RH. non-condensing
07. Cooling: Cooling shall be with natural convection cooling
08. RoHS 2: Complies with EU 2011/65/EU China SJ/T 11364-2014

PROPRIETARY INFORMATION

PROPRIETARY OF GLOBTEK, INC. ANY REPRODUCTION, DISCLOSURE OR USE OF THIS DRAWING, IN WHOLE OR IN PART, IS HEREBY PROHIBITED EXCEPT AS SPECIFIED IN WRITING BY GLOBTEK, INC. © GlobTek, Inc. 2015 - 2024

guest / 05/27/2024 4:10:01 PM GMT

F) ENCLOSURE

01. Housing: High impact plastic, 94V0 polycarbonate, non-vented

02. Markings: Label and/or Pad Printed and/or Molded in the case

TO ADDRESS SYSTEM-LEVEL EMI CONCERNS, FERRITE CHOKES/BEADS MAY BE ADDED/REVISED UPON REQUEST. A SAMPLE KIT OF GLOBTEK'S STANDARD FERRITES IS AVAILABLE UNDER GLOBTEK P/N: EMI-MITIGATION-KIT1

FOR ADDITIONAL INFORMATION, PLEASE READ OUR WHITE PAPER AT: https://r.globtek.info/3QeaqtD

PROPRIETARY INFORMATION

PROPRIETARY OF GLOBTEK, INC. ANY REPRODUCTION, DISCLOSURE OR USE OF THIS DRAWING, IN WHOLE OR IN PART, IS HEREBY PROHIBITED EXCEPT AS SPECIFIED IN WRITING BY GLOBTEK, INC. © GlobTek, Inc. 2015 - 2024

guest / 05/27/2024 4:10:01 PM GMT

GlobTek, Inc. www.globtek.com 186 Veterans Drive, Northvale, NJ 07647 Tel. (201) 784-1000 Fax (201) 784-0111	Drawing Title: GT-83082-3612-W2E, ICT/ITE Power Supply, Efficiency Level: USA DOE Level VI / Eco-design Directive 2009/125/EC, (EU) 2019/1782, Case Color/Style: GlobTek Black, Wall Plug-in, Regulated Switchmode AC-DC; Current Limited Power Supply AC Adaptor, Input Rating: 100-240V~, 50-60 Hz, Euro Plug Fixed, , Output Rating: 36.00W, 12.0V@3.0A, Pin Out: Center Positive (+V), symbol compliant with IEC 60417 symbol no. 5926, Output Configuration: 1500 mm, 18/2 Cond, UL 2468, Female Barrel 5.5*2.1*11mm w/ Spring Clip & Locking Notch or Equal, Ferrite: None, GlobTek Black, GT Cord # C16021, Blades/Input Cord: Fixed Blades European CEE 7/16 2 Conductor, Approvals:	
	Model No. GT-83082-3612-W2E	
	Part No./Ordering No. WR9ME3000CCP-F(R6B)	Rev C

3D File Download https://www.globtek.com/file/dl/gt-83082-3612-w2e_asm.stp

Mechanical drawing

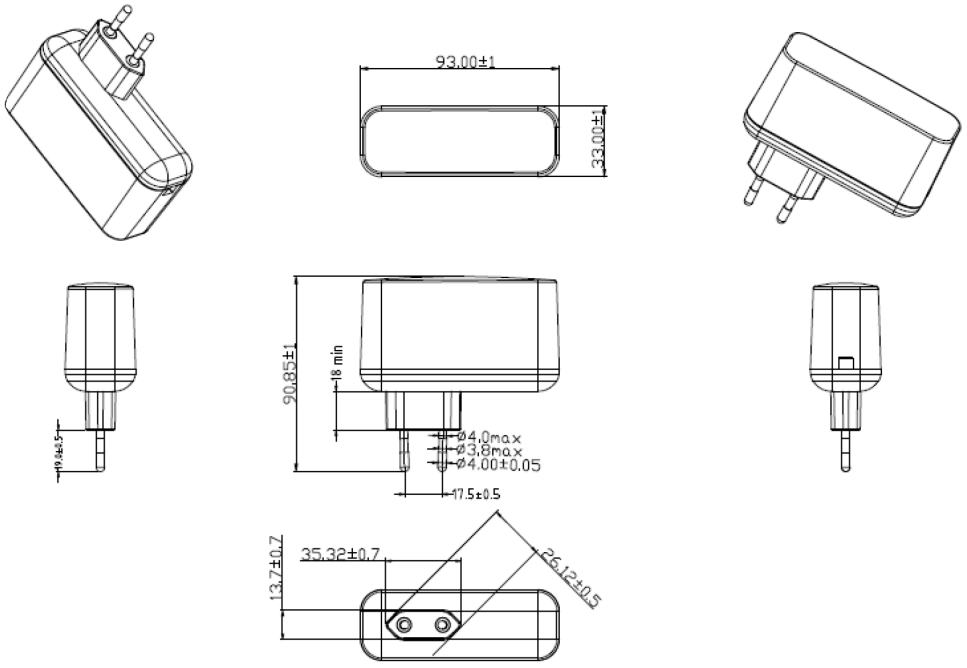

PROPRIETARY INFORMATION
PROPRIETARY OF GLOBTEK, INC. ANY REPRODUCTION, DISCLOSURE OR USE OF THIS DRAWING, IN WHOLE OR IN PART, IS HEREBY PROHIBITED EXCEPT AS SPECIFIED IN WRITING BY GLOBTEK, INC. © GlobTek, Inc. 2015 - 2024
guest / 05/27/2024 4:10:01 PM GMT

GlobTek, Inc.
www.globtek.com
186 Veterans Drive,
Northvale, NJ 07647
Tel. (201) 784-1000
Fax (201) 784-0111

Drawing Title: GT-83082-3612-W2E, ICT/ITE Power Supply, Efficiency Level: USA DOE Level VI / Eco-design Directive 2009/125/EC, (EU) 2019/1782, Case Color/Style: GlobTek Black, Wall Plug-in, Regulated Switchmode AC-DC; Current Limited Power Supply AC Adaptor, Input Rating: 100-240V~, 50-60 Hz, Euro Plug Fixed, , Output Rating: 36.00W, 12.0V@3.0A, Pin Out: Center Positive (+V), symbol compliant with IEC 60417 symbol no. 5926, Output Configuration: 1500 mm, 18/2 Cond, UL 2468, Female Barrel 5.5*2.1*11mm w/ Spring Clip & Locking Notch or Equal, Ferrite: None, GlobTek Black, GT Cord # C16021, Blades/Input Cord: Fixed Blades European CEE 7/16 2 Conductor, Approvals:

Model No. GT-83082-3612-W2E

Part No./Ordering No. WR9ME3000CCP-F(R6B) | Rev C

DERATING CURVE

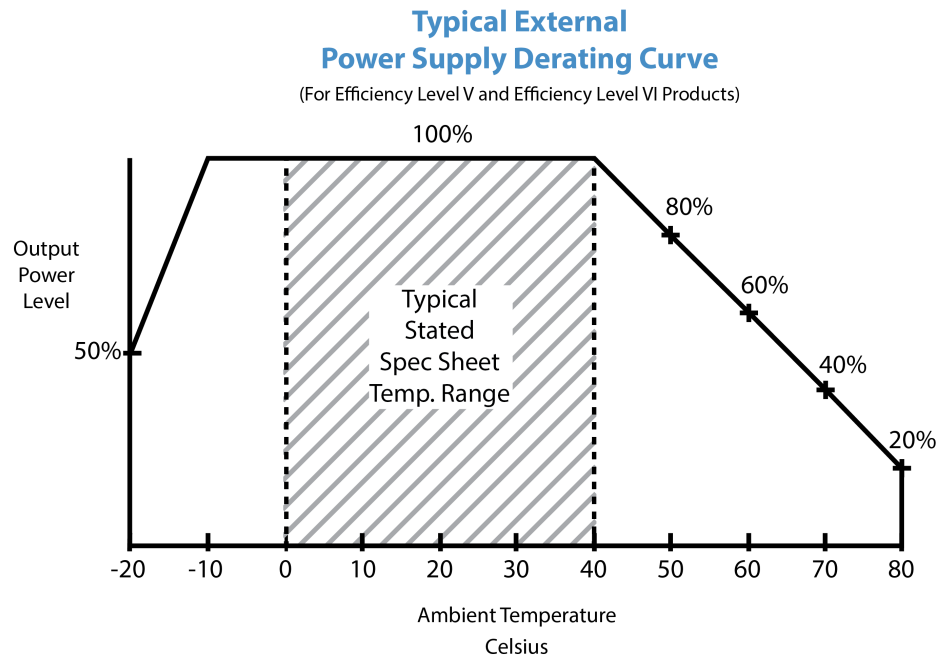

PROPRIETARY INFORMATION
PROPRIETARY OF GLOBTEK, INC. ANY REPRODUCTION, DISCLOSURE OR USE OF THIS DRAWING, IN WHOLE OR IN PART, IS HEREBY PROHIBITED EXCEPT AS SPECIFIED IN WRITING BY GLOBTEK, INC. © GlobTek, Inc. 2015 - 2024
guest / 05/27/2024 4:10:01 PM GMT

GlobTek, Inc.
www.globtek.com
186 Veterans Drive,
Northvale, NJ 07647
Tel. (201) 784-1000
Fax (201) 784-0111

Drawing Title: GT-83082-3612-W2E, ICT/ITE Power Supply, Efficiency Level: USA DOE Level VI / Eco-design Directive 2009/125/EC, (EU) 2019/1782, Case Color/Style: GlobTek Black, Wall Plug-in, Regulated Switchmode AC-DC; Current Limited Power Supply AC Adaptor, Input Rating: 100-240V~, 50-60 Hz, Euro Plug Fixed, , Output Rating: 36.00W, 12.0V@3.0A, Pin Out: Center Positive (+V), symbol compliant with IEC 60417 symbol no. 5926, Output Configuration: 1500 mm, 18/2 Cond, UL 2468, Female Barrel 5.5*2.1*11mm w/ Spring Clip & Locking Notch or Equal, Ferrite: None, GlobTek Black, GT Cord # C16021, Blades/Input Cord: Fixed Blades European CEE 7/16 2 Conductor, Approvals:	
Model No. GT-83082-3612-W2E	
Part No./Ordering No. WR9ME3000CCP-F(R6B)	Rev C

INPUT CONFIGURATION

(F1) Floating output, Class II / double insulated

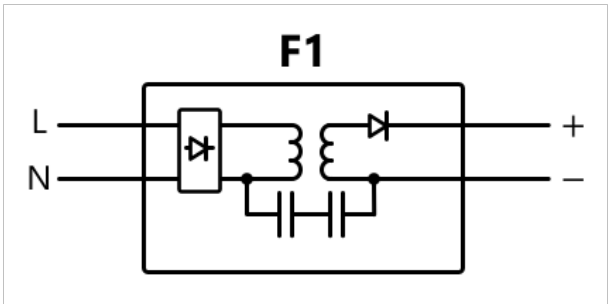

Alternate grounding configurations available upon request.

Blades/Cord Included:FBEuro2:Fixed Blades European CEE 7/16 2 Conductor
Blades/Cord Installed:FBEuro2:Fixed Blades European CEE 7/16 2 Conductor

Europlug 2 Prong CEE 7/7
European CEE 7/16 configuration:EN 50075 Europlug 2 PIN

The prongs of the Europlug are 19 mm long. They consist of a 9 mm long conductive tip of 4 mm diameter with a rounded ending, followed by a 10 mm long flexible insulated shaft of not more than 3.8 mm diameter. The two prongs are not exactly parallel and converge slightly; their centres are 19 mm apart at the tip and 18.6 mm apart at the base. The elasticity of the converging prongs provides sufficient contact force for the Europlug's current rating with a variety of socket-hole arrangements. The entire plug is 35.3 mm wide and 13.7 mm high, and must not exceed these dimensions within 18 mm behind its front plane (this allows for the recesses on many European socket types). The left and right side of the plug are formed by surfaces that are at 45° relative to the horizontal plan.

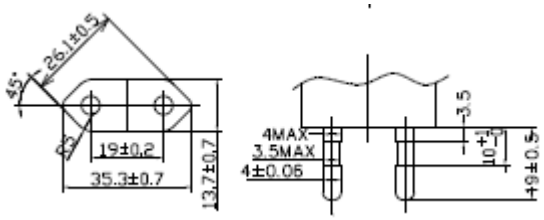

PROPRIETARY INFORMATION
PROPRIETARY OF GLOBTEK, INC. ANY REPRODUCTION, DISCLOSURE OR USE OF THIS DRAWING, IN WHOLE OR IN PART, IS HEREBY PROHIBITED EXCEPT AS SPECIFIED IN WRITING BY GLOBTEK, INC. © GlobTek, Inc. 2015 - 2024
guest / 05/27/2024 4:10:01 PM GMT

GlobTek, Inc.
www.globtek.com
186 Veterans Drive,
Northvale, NJ 07647
Tel. (201) 784-1000
Fax (201) 784-0111

Drawing Title: GT-83082-3612-W2E, ICT/ITE Power Supply, Efficiency Level: USA DOE Level VI / Eco-design Directive 2009/125/EC, (EU) 2019/1782, Case Color/Style: GlobTek Black, Wall Plug-in, Regulated Switchmode AC-DC; Current Limited Power Supply AC Adaptor, Input Rating: 100-240V~, 50-60 Hz, Euro Plug Fixed, , Output Rating: 36.00W, 12.0V@3.0A, Pin Out: Center Positive (+V), symbol compliant with IEC 60417 symbol no. 5926, Output Configuration: 1500 mm, 18/2 Cond, UL 2468, Female Barrel 5.5*2.1*11mm w/ Spring Clip & Locking Notch or Equal, Ferrite: None, GlobTek Black, GT Cord # C16021, Blades/Input Cord: Fixed Blades European CEE 7/16 2 Conductor, Approvals:

Model No. GT-83082-3612-W2E

Part No./Ordering No. WR9ME3000CCP-F(R6B) Rev C

OUTPUT CORD AND CONNECTOR: CL1/C16021

ACTUAL CONNECTORS, OVERMOLDS, FERRITES MAY VARY SLIGHTLY FROM THE PICTURE BELOW

CABLE TYPE	UL 2468
CABLE LENGTH (mm)	1500
CABLE TOLERANCE (mm)	±50
WIRE GAUGE (AWG)	18
CONDUCTORS	2
HANK DIMENSION (mm)	70 ± 10
CABLE / CONNECTOR OVERMOLD COLOR	GlobTek Black
FERRITE TYPE AND DIMENSION	None
FERRITE NUMBER OF TURNS(Definition)	N/A
FERRITE DIMENSION FROM STRAIN RELIEF	N/A
FERRITE DIMENSION FROM PLUG	N/A
PLUG TYPE	Female Barrel 5.5*2.1*11mm w/ Spring Clip & Locking Notch or Equal
OVERMOLDED	Yes
OVER MOLD ORIENTATION	Straight
CONNECTOR PIN OUT	Center Positive (+V), symbol compliant with IEC 60417 symbol no. 5926

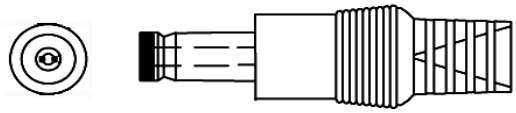

ADDITIONAL OUTPUT PLUG OPTIONS ARE AVAILABLE AT https://www.globtek.com/en/connectors
STANDARD PLUGS AND CONNECTORS CAN BE SEEN ONLINE AT https://www.globtek.com/en/connectors
CALCULATE VOLTAGE REGULATION/DROP WITH OUR ONLINE CALCULATOR: https://www.globtek.com/r2/PtqjjL

PROPRIETARY INFORMATION
PROPRIETARY OF GLOBTEK, INC. ANY REPRODUCTION, DISCLOSURE OR USE OF THIS DRAWING, IN WHOLE OR IN PART, IS HEREBY PROHIBITED EXCEPT AS SPECIFIED IN WRITING BY GLOBTEK, INC. © GlobTek, Inc. 2015 - 2024
guest / 05/27/2024 4:10:01 PM GMT

GlobTek, Inc.
www.globtek.com
186 Veterans Drive,
Northvale, NJ 07647
Tel. (201) 784-1000
Fax (201) 784-0111

Drawing Title: GT-83082-3612-W2E, ICT/ITE Power Supply, Efficiency Level: USA DOE Level VI / Eco-design Directive 2009/125/EC, (EU) 2019/1782, Case Color/Style: GlobTek Black, Wall Plug-in, Regulated Switchmode AC-DC; Current Limited Power Supply AC Adaptor, Input Rating: 100-240V~, 50-60 Hz, Euro Plug Fixed, , Output Rating: 36.00W, 12.0V@3.0A, Pin Out: Center Positive (+V), symbol compliant with IEC 60417 symbol no. 5926, Output Configuration: 1500 mm, 18/2 Cond, UL 2468, Female Barrel 5.5*2.1*11mm w/ Spring Clip & Locking Notch or Equal, Ferrite: None, GlobTek Black, GT Cord # C16021, Blades/Input Cord: Fixed Blades European CEE 7/16 2 Conductor, Approvals:	
Model No. GT-83082-3612-W2E	
Part No./Ordering No. WR9ME3000CCP-F(R6B)	Rev C

OUTPUT CONNECTOR HOOK UP

TO ADDRESS SYSTEM-LEVEL EMI CONCERNS, FERRITE CHOKES/BEADS MAY BE ADDED/REVISED UPON REQUEST. A SAMPLE KIT OF GLOBTEK'S STANDARD FERRITES IS AVAILABLE UNDER GLOBTEK P/N: EMI-MITIGATION-KIT1

FOR ADDITIONAL INFORMATION, PLEASE READ OUR WHITE PAPER AT:
https://www.globtek.com/en/technical-articles/ferrite-kit-radiated-emi-suppression-kit-for-globtek-power-supplies-cable-assemblies

PROPRIETARY INFORMATION
PROPRIETARY OF GLOBTEK, INC. ANY REPRODUCTION, DISCLOSURE OR USE OF THIS DRAWING, IN WHOLE OR IN PART, IS HEREBY PROHIBITED EXCEPT AS SPECIFIED IN WRITING BY GLOBTEK, INC. © GlobTek, Inc. 2015 - 2024
guest / 05/27/2024 4:10:01 PM GMT

GlobTek, Inc.
www.globtek.com
186 Veterans Drive,
Northvale, NJ 07647
Tel. (201) 784-1000
Fax (201) 784-0111

Drawing Title: GT-83082-3612-W2E, ICT/ITE Power Supply, Efficiency Level: USA DOE Level VI / Eco-design Directive 2009/125/EC, (EU) 2019/1782, Case Color/Style: GlobTek Black, Wall Plug-in, Regulated Switchmode AC-DC; Current Limited Power Supply AC Adaptor, Input Rating: 100-240V~, 50-60 Hz, Euro Plug Fixed, , Output Rating: 36.00W, 12.0V@3.0A, Pin Out: Center Positive (+V), symbol compliant with IEC 60417 symbol no. 5926, Output Configuration: 1500 mm, 18/2 Cond, UL 2468, Female Barrel 5.5*2.1*11mm w/ Spring Clip & Locking Notch or Equal, Ferrite: None, GlobTek Black, GT Cord # C16021, Blades/Input Cord: Fixed Blades European CEE 7/16 2 Conductor, Approvals:	
Model No. GT-83082-3612-W2E	
Part No./Ordering No. WR9ME3000CCP-F(R6B)	Rev C

LABEL:L-1186

LABEL P/N	Standard GT
MATERIAL	Flat Thermal Transfer, Imprintable, Polyester Label and/or Pad Printed and/or Molded, and/or Laser Engraved in the case
BACKGROUND COLOR	Black if housing is Black, White or Silver if housing is White or Gray.
TEXT COLOR	White or Silver if label is Black Background for Black housing. Black if label is White or Silver background and Housing is White or Gray.
LABEL WIDTH (mm)	35.0
LABEL HEIGHT (mm)	15.0
SPECIAL BARCODE LABEL MATERIAL	No

Below is the minimum information which will appear on the label. NOTE: in the logo area additional/actual positioning of symbols and text is subjected to change as per agency updates/requirements or additional model approvals become available.
Regulatory certifications/label markings may be in logo area on the label or molded into the case housing outside the label area.
Information will be shown via label and/or pad printed and/or molded and/or laser engraved in the case. * Date code markings at GlobTek option
.

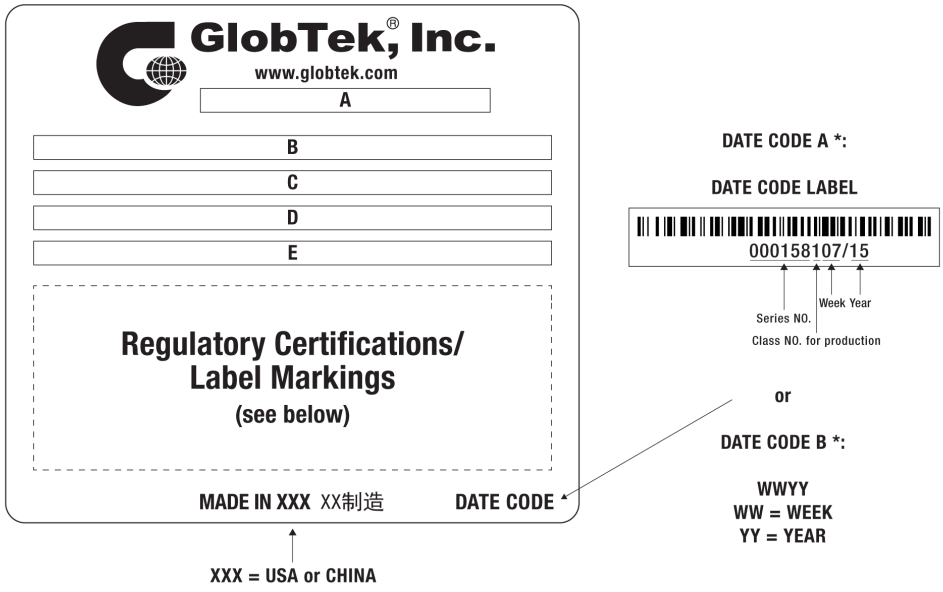

A=ICT/ITE Power Supply
B=P/N: (料号) WR9ME3000CCP-F(R6B)
C=Model (型号) GT-83082-3612-W2E
D=Input (输入)100-240V~, 50-60 Hz, 1.0A
E=Output (输出)12.0 V ⎓ 3.0 A, 36.00W

PROPRIETARY INFORMATION
PROPRIETARY OF GLOBTEK, INC. ANY REPRODUCTION, DISCLOSURE OR USE OF THIS DRAWING, IN WHOLE OR IN PART, IS HEREBY PROHIBITED EXCEPT AS SPECIFIED IN WRITING BY GLOBTEK, INC. © GlobTek, Inc. 2015 - 2024
guest / 05/27/2024 4:10:01 PM GMT

AGENCY ONLINE DOCUMENTS	http://www.globtek.info/certs/GT-83082-W2Z/
CE EC-Declaration for Medical	Contact GlobTek for more information
CE EC-Declaration for Industrial/Commercial/ITE	https://cs.globtek.info/ec_declaration_product?id=01ta0000005dkm2&i=5
CE EC-Declaration for Household	Contact GlobTek for more information
UKCA-Declaration for Medical	Contact GlobTek for more information
UKCA-Declaration for Industrial/Commercial/ITE	https://cs.globtek.info/ukca_declaration_product?id=01ta0000005dkm2&i=5
UKCA-Declaration for Household	Contact GlobTek for more information
Morocco SDoC Declaration	https://cs.globtek.info/Morocco_SDoC_Declaration?id=a0Oa000000MiZX8EAN
RoHS/RoHS3 Declaration	https://www.globtek.com/pdf/rohs_cert/01ta0000005dkm2AAA
REACH Declaration	https://www.globtek.com/pdf/iso_certificates/REACH.pdf
Conflict Minerals Declaration	https://www.globtek.com/pdf/conflict-minerals.pdf
Prop 65 Statement	https://www.globtek.com/prop-65-statement.pdf

IPXY rating is based on 3rd party testing and customers should check suitability and test system level IPXY rating before ordering.

Regulatory Certifications/Label Markings

Below follows a link to the latest regulatory certifications and marks for this specific product. National standards as well as certification schemes are constantly changing and so is the set of certification marks and symbols applicable to this product. Various standards, marks and symbols, and certificates are subject to change at any time without notice.

Additional standards or unique country certifications are available upon request. Please contact Globtek to request a quotation.

LATEST PRODUCT/MODEL CERTIFICATIONS:	https://www.globtek.com/ds/m79Jdu65aRz/voiioECTzSB.html
AGENCY ONLINE DOCUMENTS	http://www.globtek.info/certs/GT-83082-W2Z/



(F1) Floating output, Class II / double insulated

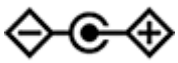

Center Positive (+V), symbol compliant with IEC 60417 symbol no. 5926

PROPRIETARY INFORMATION

PROPRIETARY OF GLOBTEK, INC. ANY REPRODUCTION, DISCLOSURE OR USE OF THIS DRAWING, IN WHOLE OR IN PART, IS HEREBY PROHIBITED EXCEPT AS SPECIFIED IN WRITING BY GLOBTEK, INC. © GlobTek, Inc. 2015 - 2024

guest / 05/27/2024 4:10:01 PM GMT

PACKAGING

Packing Spec P/N	Standard GT-83082, User manual
Box Qty	60
Gift Box Size (mm)	110*53*92
Gift Box Color	White
Master Carton Size (mm)	460 x 285 x 308
Master Carton Cubic Volume (m³)	0.04
Master GW (Kg)	16.5 kg
BLADES INCLUDED	FBEuro2: Fixed Blades European CEE 7/16 2 Conductor
BLADE/CORD INSTALLED	FBEuro2: Fixed Blades European CEE 7/16 2 Conductor
USER MANUAL*	809-DESKTOPUSERMANUAL on A4 paper
USER MANUAL WEB LINK	https://www.globtek.com/pdf/809-DESKTOPUSERMANUAL.jpg

* This specification sheet is considered the user manual for all applications. It is expected that the buyer of this product will use it to formulate their own user manual for their end product and a user manual specifically for the power adapter is not usually required. If a user manual is not specifically listed above then none will be provided with this unit.

If specific packaging is required, this section must specify all requirements and note “no exceptions”. If this section does not specify packaging, it is subject to change without notice at GlobTek’s discretion

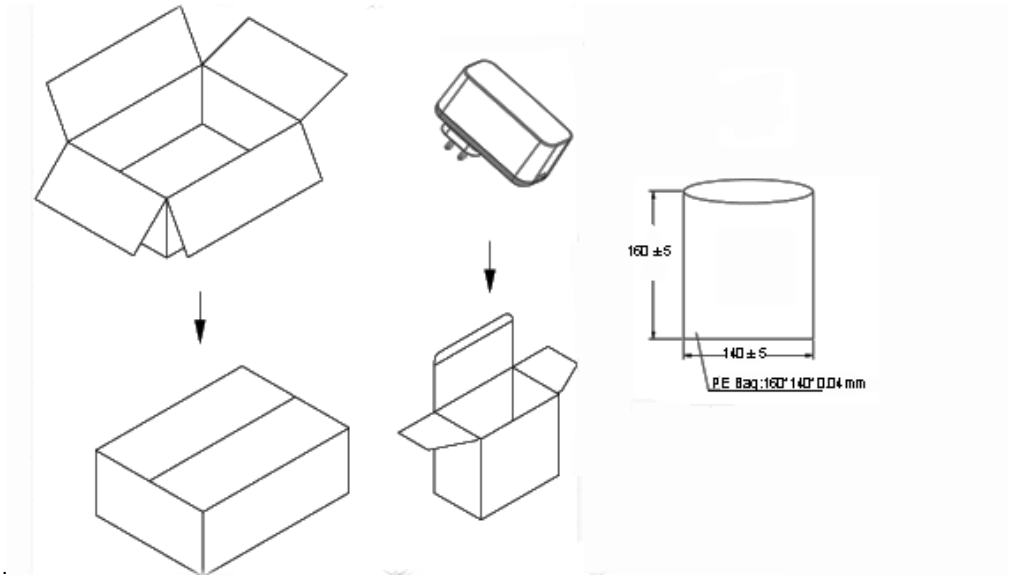

PROPRIETARY INFORMATION

PROPRIETARY OF GLOBTEK, INC. ANY REPRODUCTION, DISCLOSURE OR USE OF THIS DRAWING, IN WHOLE OR IN PART, IS HEREBY PROHIBITED EXCEPT AS SPECIFIED IN WRITING BY GLOBTEK, INC. © GlobTek, Inc. 2015 - 2024

guest / 05/27/2024 4:10:01 PM GMT

INSTRUCTIONS TO THE OEM SYSTEMS ENGINEER

It is the responsibility of the OEM systems engineer to provide the end system user instructions and warnings for the use of this product in the end system.

If an input cord is required for this product, AC Mains voltage should be provided to the power supply by a power supply cord approved to the national standards of the country in which it will be used.

This product is not designed to be repaired. No serviceable parts inside. A blown internal fuse is an indication of catastrophic failure of circuit component(s). If a Failure Analysis is required for a failed power supply/battery charger, please return the damaged unit to GlobTek for an accurate determination of the root cause of the failure.

EMC Compliance of the complete OEM product, including the GlobTek power supply/battery charger needs to be verified by the OEM systems engineer.

PROPRIETARY INFORMATION

PROPRIETARY OF GLOBTEK, INC. ANY REPRODUCTION, DISCLOSURE OR USE OF THIS DRAWING, IN WHOLE OR IN PART, IS HEREBY PROHIBITED EXCEPT AS SPECIFIED IN WRITING BY GLOBTEK, INC. © GlobTek, Inc. 2015 - 2024

guest / 05/27/2024 4:10:01 PM GMT

GlobTek, Inc.
www.globtek.com
186 Veterans Drive,
Northvale, NJ 07647
Tel. (201) 784-1000
Fax (201) 784-0111

Drawing Title: GT-83082-3612-W2E, ICT/ITE Power Supply, Efficiency Level: USA DOE Level VI / Eco-design Directive 2009/125/EC, (EU) 2019/1782, Case Color/Style: GlobTek Black, Wall Plug-in, Regulated Switchmode AC-DC; Current Limited Power Supply AC Adaptor, Input Rating: 100-240V~, 50-60 Hz, Euro Plug Fixed, , Output Rating: 36.00W, 12.0V@3.0A, Pin Out: Center Positive (+V), symbol compliant with IEC 60417 symbol no. 5926, Output Configuration: 1500 mm, 18/2 Cond, UL 2468, Female Barrel 5.5*2.1*11mm w/ Spring Clip & Locking Notch or Equal, Ferrite: None, GlobTek Black, GT Cord # C16021, Blades/Input Cord: Fixed Blades European CEE 7/16 2 Conductor, Approvals:	
Model No. GT-83082-3612-W2E	
Part No./Ordering No. WR9ME3000CCP-F(R6B)	Rev C

INSTRUCTION SHEET

N/A

PROPRIETARY INFORMATION
PROPRIETARY OF GLOBTEK, INC. ANY REPRODUCTION, DISCLOSURE OR USE OF THIS DRAWING, IN WHOLE OR IN PART, IS HEREBY PROHIBITED EXCEPT AS SPECIFIED IN WRITING BY GLOBTEK, INC. © GlobTek, Inc. 2015 - 2024
guest / 05/27/2024 4:10:01 PM GMT

GlobTek, Inc.
www.globtek.com
186 Veterans Drive,
Northvale, NJ 07647
Tel. (201) 784-1000
Fax (201) 784-0111

Drawing Title: GT-83082-3612-W2E, ICT/ITE Power Supply, Efficiency Level: USA DOE Level VI / Eco-design Directive 2009/125/EC, (EU) 2019/1782, Case Color/Style: GlobTek Black, Wall Plug-in, Regulated Switchmode AC-DC; Current Limited Power Supply AC Adaptor, Input Rating: 100-240V~, 50-60 Hz, Euro Plug Fixed, , Output Rating: 36.00W, 12.0V@3.0A, Pin Out: Center Positive (+V), symbol compliant with IEC 60417 symbol no. 5926, Output Configuration: 1500 mm, 18/2 Cond, UL 2468, Female Barrel 5.5*2.1*11mm w/ Spring Clip & Locking Notch or Equal, Ferrite: None, GlobTek Black, GT Cord # C16021, Blades/Input Cord: Fixed Blades European CEE 7/16 2 Conductor, Approvals:	
Model No. GT-83082-3612-W2E	
Part No./Ordering No. WR9ME3000CCP-F(R6B)	Rev C

PROPRIETARY INFORMATION
PROPRIETARY OF GLOBTEK, INC. ANY REPRODUCTION, DISCLOSURE OR USE OF THIS DRAWING, IN WHOLE OR IN PART, IS HEREBY PROHIBITED EXCEPT AS SPECIFIED IN WRITING BY GLOBTEK, INC. © GlobTek, Inc. 2015 - 2024
guest / 05/27/2024 4:10:01 PM GMT